ADVERTISEMENT FOR REQUEST FOR PROPOSAL
COBB COUNTY PURCHASING DEPARTMENT

BID OPENING DATE: SEPTEMBER 9, 2010

Sealed proposals from qualified contractors will be receive before 12:00 NOON, September 9, 2010, in the Cobb County Purchasing Department, 1772 County Services Parkway, Marietta, GA 30008 for furnishing all labor. Materials, equipment, appliances, etc. pursuant to the plans, specifications, condition and addenda for:

SEALED BID # 10 -5519
REQUEST FOR PROPOSAL
HVAC SYSTEM IMPROVEMENTS PROJECT
ADMINISTRATION BUILDING
10 EAST PARK SQUARE
MARIETTA, GEORGIA 30060
COBB COUNTY PROPERTY MANAGEMENT DEPARTMENT

PRE-PROPOSAL MEETING: AUGUST 24, 2010 @ 9:00 A.M.
COBB COUNTY PROPERTY MANAGEMENT MEETING ROOM
57 WADDELL STREET
MARIETTA, GEORGIA 30060

No bids will be accepted after the 12:00 noon deadline.

Proposals are opened at 2:00 p.m. at Cobb County Purchasing Department, 1772 County Services Parkway, 2nd Floor, Bid/Meeting Room, Marietta, GA 30008.

All contractors wishing to submit proposals for this work must submit a qualification statement form (in the proposal package) to be considered. Proposals must be accompanied by bid security in the amount not less than five percent (5%) of the base bid. Performance Bond and Labor and Material Payment Bond, or other security instruments as allowed by law each in the amount equal to 100% of the contract sum will be required of the successful bidder. Bonds must be written by a surety company licensed to do business in the State of Georgia, have a “Best’s” rating of “A” or better, appear on the current U.S. Treasury Department list of sureties that are acceptable on bonds for the federal government (circular 570), and have recommended bonds limits equal to or in excess of those required for this project; otherwise acceptable to the owner.

No proposal may be withdrawn for a period of ninety (90) days after date of bid opening, unless otherwise specified in the bid documents. Cobb County will consider the competency and responsibility of bidders in making the award. Cobb County reserves the right to reject any and all proposals, to waive informalities and technicalities, to reject portions of the proposals, and to award contracts in a manner consistent with the County and the laws governing the State of Georgia.

This solicitation and any addenda are available for download in PDF format on the Cobb County purchasing website. www.purchasing.cobbcountyga.gov
To request a copy of the proposal documents, **FAX** the following information to the Purchasing Department @ 770-528-1154 or **e-mail** requests to purchasing@cobbcounty.org:
.
Company name, contact name, company address, phone number and fax number.

Please reference the proposal number and the title of the proposal in the request

Advertise: AUGUST 13, 20, 27, 2010
SEPTEMBER 3, 2010

BIDDING INSTRUCTIONS – TERMS AND CONDITIONS

1. PREPARATION OF BID:

(A) Bidders are expected to examine the drawings, specifications, schedules, and all instructions. Failure to do so will be at the bidder's risk.
(B) Each bidder shall furnish the information required by the bid form. The bidder shall sign and print or type his/her name where designated. The person signing the bid must initial erasures or other changes.
(C) Unit price for each quotation shall be shown and such price shall include packing unless otherwise specified, along with a total and grand total where applicable. In case of discrepancy between a unit price and extended price, the unit price will be presumed correct.
(D) Where not otherwise specified, bidders must definitely state DATE OF DELIVERY.

2. EXPLANATION TO BIDDERS:

Any explanation desired by a bidder regarding the meaning or interpretation of Invitation to Bids, Request for Proposals or Qualifications, drawings, specifications, etc., must be in writing. All questions must be received within seven (7) business days prior to the bid opening date for a response to be generated by the County to all bidders in the form of an addendum. If any statement in the bidding documents, specifications, etc., appears ambiguous to the bidder, the bidder is specifically instructed to make a written request to the Purchasing Department, unless otherwise outlined in the specifications. Any information given to a prospective bidder concerning an Invitation for Bid will be furnished to all prospective bidders, as an addendum to the invitation, if such information is necessary to bidders in submitting bids on the invitation or if the lack of such information would be prejudicial to uninformed bidders. Receipt of the addendum by a bidder must be acknowledged on the bid or by letter received before the date and time specified for the bid opening. **ORAL EXPLANATION OR INSTRUCTIONS GIVEN BEFORE THE AWARD OF THE CONTRACT WILL NOT BE BINDING.**

3. SUBMISSION OF BIDS: FACSIMILE BIDS WILL NOT BE CONSIDERED.

(A) Any Bid Package and modifications thereof shall be enclosed in a sealed envelope, addressed to the office specified in the Invitation to Bid, with the name and address of the bidder, the date and hour of bid opening, and name of bid. A bid reply label will be included in most bid packages stating the above referenced information. Any bid package NOT having bid information on outside of package could be opened as regular mail, and bid could be disqualified.
(B) Samples of items, when required, must be submitted within the time specified, unless otherwise specified by the County, and at no expense to the County
(C) An item offered must at least meet specifications called for and must be of quality which will adequately service the purpose and use for which it was intended.
(D) Full identification of each item bid upon, including brand name, make, model, and catalog number, must be furnished according to the bid specifications if requested to identify exactly what the bidder is proposing. Supporting literature may be furnished to further substantiate the proposal.
(E) The bidder represents that the article(s) to be furnished under this Invitation to Bid is (are) new and that the quality has not deteriorated so as to impair its usefulness.
(F) Bids cannot be withdrawn or corrected after the bid opening (except reductions or changes by the successful bidder which would be beneficial or advantageous to the County). The County as deemed necessary may reject changes.
(G) Cobb County is exempt from Federal Excise Tax and Georgia Sales Tax.
(H) Cobb County does not accept conditional bids.

4. DEFAULT:

The Award as a result of bids received under this invitation may be in part based on the delivery factor. Accordingly, should delivery fail to be performed within the time specified by the bidder, the bid may then be declared in default of the contract. In such event, the County may then proceed to purchase in the open market the items from another source.

5. F.O.B. POINT:

Unless otherwise stated in the Invitation to Bid and any resulting contract, all articles will be F.O.B. Destination. This means delivered, unloaded, and placed in the designated place.

6. AWARD OF CONTRACT:

The Contract will be awarded to the responsible bidder whose bid will be the most advantageous to the County, price, and other factors considered. The County will make the determination. The County reserves the right at any time to reject any and all bids, to waive informalities and technicalities, to award portions of the bid, and to award contracts consistent with the County and the laws governing the State of Georgia. Normal payment terms are net thirty (30) days after receipt of invoice by the Finance Department.

SUBMIT BID/PROPOSAL TO:

COBB COUNTY PURCHASING DEPARTMENT
1772 COUNTY SERVICES PARKWAY
MARIETTA. GA 30008-4012

BID/PROJECT NUMBER: 10-5519

REQUEST FOR PROPOSAL
HVAC SYSTEM IMPROVEMENTS PROJECT
ADMINISTRATION BUILDING
10 EAST PARK SQUARE
MARIETTA, GEORGIA 30060

DELIVERY DEADLINE: SEPTEMBER 9, 2010 BEFORE 12:00 (NOON) EST
(NO BIDS/PROPOSALS WILL BE ACCEPTED AFTER THIS DEADLINE).

OPENING DATE: SEPTEMBER 9, 2010 @ 2:00 P.M. IN THE PURCHASING DEPARTMENT BID ROOM.

BUSINESS NAME AND ADDRESS INFORMATION:

COMPANY NAME: _____

CONTACT NAME: _____

COMPANY ADDRESS: _____

E-MAIL ADDRESS: _____

PHONE NUMBER: _____

FAX NUMBER: _____
_____

NAME AND OFFICIAL TITLE OF OFFICER GUARANTEEING THIS QUOTATION:

_____ _____
(PLEASE PRINT/TYPE) NAME TITLE

SIGNATURE OF OFFICER ABOVE: _____
(SIGNATURE)

TELEPHONE: _____ FAX: _____

BIDDER WILL INDICATE TIME PAYMENT DISCOUNT: _____

BIDDER SHALL INDICATE MAXIMUM DELIVERY DATE: _____

BIDS RECEIVED AFTER THE DATE AND TIME INDICATED WILL NOT BE CONSIDERED. COBB COUNTY RESERVES THE RIGHT TO REJECT ANY AND ALL BIDS, TO WAIVE INFORMALITIES, TO REJECT PORTIONS OF THE BID, TO WAIVE TECHNICALITIES AND TO AWARD CONTRACTS IN A MANNER CONSISTENT WITH THE COUNTY AND THE LAWS GOVERNING THE STATE OF GEORGIA.

THE ENCLOSED (OR ATTACHED) BID IS IN RESPONSE TO INVITATION NUMBER 10-5519 ; IS A FIRM OFFER, AS DEFINED BY SECTION O.C.G.A. (S) 11-2-205 OF THE CODE OF GEORGIA (GEORGIA LAWS 1962 PAGES 156-178), BY THE UNDERSIGNED BIDDER. THIS OFFER SHALL REMAIN OPEN FOR ACCEPTANCE FOR A PERIOD OF 90 CALENDAR DAYS FROM THE BID OPENING DATE, AS SET FORTH IN THIS INVITATION TO BID UNLESS OTHERWISE SPECIFIED IN THE BID DOCUMENTS.

NOTICE TO BIDDERS - - BID QUOTES MUST INCLUDE INSIDE DELIVERY CHARGES

ADVERTISE DATES: AUGUST 13, 20, 27, 2010
SEPTEMBER 3, 2010

COBB COUNTY
PURCHASING DEPARTMENT
1772 County Services Parkway
Marietta, Georgia 30008-4012
(770) 528-8400/FAX (770) 528-1154
www.cobbcounty.org

IMPORTANT NOTICE – PLEASE READ CAREFULLY!!

All vendors are required to submit the ORIGINAL AND AT LEAST one (1) duplicated copy of any bid submitted to Cobb County. Please refer to your bid specifications to determine if more than one (1) copy is required. Non-submission of a duplicate copy may disqualify your bid/proposal.

A **"SEALED BID LABEL"** has been enclosed to affix to your bid. This label ***MUST*** be affixed to the outside of the envelope or package, **even if it is a "NO BID" response**. Failure to attach the label may result in your bid being opened in error or not being routed to the proper location for consideration. No bid will be accepted after the date and time specified. IT IS THE VENDOR'S RESPONSIBILITY TO ENSURE THAT EACH BID HAS BEEN RECEIVED IN A TIMELY MANNER.

BIDS MUST BE RECEIVED BEFORE 12:00 (NOON) ON BID OPENING DAY

Bids must be received at the Cobb County Purchasing Department**. Any bids received later than 12:00 (noon) will not be accepted**. The County accepts no responsibility for delays in the mail. Bids are to be mailed or hand delivered to:

COBB COUNTY PURCHASING DEPARTMENT
1772 COUNTY SERVICES PARKWAY
MARIETTA, GA 30008-4012

Bids will be opened at 2:00 P.M. in the Cobb County Purchasing Department, 1772 County Services Parkway, 2nd Floor, Conference/Bid Room, Marietta, GA 30008.

Thank you in advance for your cooperation.

SEALED BID LABEL

SEALED BID ENCLOSED

DELIVER TO:
COBB COUNTY PURCHASING
1772 County Services Parkway
Marietta, GA 30008-4012

SEALED BID # 10-5519 DATE: September 9, 2010

BIDS MUST BE RECEIVED BEFORE 12:00 NOON

DESCRIPTION: Request for Proposal
HVAC System Improvements Project
Administration Building
10 East Park Square
Marietta, Georgia 30060

PLEASE ATTACH LABEL TO OUTSIDE OF BID PACKAGE

Cobb County...Expect the Best!

REQUEST FOR PROPOSAL

SEALED BID # 10 – 5519
HVAC SYSTEM IMPROVEMENTS PROJECT
ADMINISTRATION BUILDING
10 EAST PARK SQUARE
MARIETTA, GEORGIA 30060
COBB COUNTY PROPERTY MANAGEMENT DEPARTMENT

BID OPENING DATE: SEPTEMBER 9, 2010

PRE-PROPOSAL CONFERENCE: AUGUST 24, 2010 @ 9:00 A.M. (E.S.T.)
COBB COUNTY PROPERTY MANAGEMENT DEPARTMENT
57 WADDELL STREET
MARIETTA, GEORGIA 30060

BIDS ARE RECEIVED IN THE
COBB COUNTY PURCHASING DEPARTMENT
1772 COUNTY SERVICES PARKWAY
MARIETTA, GEORGIA 30008
BEFORE 12:00 (NOON) BY THE BID OPENING DATE

BIDS WILL BE OPENED IN THE COBB COUNTY PURCHASING DEPARTMENT
BID/MEETING ROOM AT 2:00 P.M.

VENDORS ARE REQUIRED TO SUBMIT THE ORIGINAL AND 3 COPY OF BID
(UNLESS OTHERWISE SPECIFIED IN BID SPECIFICATIONS)

N.I.G.P. COMMODITY CODE: 91450

NAME: _____

ADDRESS: _____

_____

REPRESENTATIVE:_____

PHONE: _____ FAX: _____

E-MAIL_____

NOTE: The Cobb County Purchasing Department will not be responsible for the accuracy or completeness of the content of any Cobb County Invitation to Bid or Request for Proposal or subsequent addenda thereto received from a source other than the Cobb County Purchasing Department.

Cobb County...Expect the Best!

"STATEMENT OF NO BID"

COBB COUNTY PURCHASING DEPARTMENT
1772 COUNTY SERVICES PARKWAY
MARIETTA, GA 30008

TO ALL PROSPECTIVE BIDDERS:

Because of the many requests to be placed on our vendors' list, we are continuously updating the list. While we want to include all bona fide vendors, we do not want to mail bids to those vendors who may no longer be interested in participating in our bidding process.

If you do not choose to respond to the attached Invitation to Bid/Request for Proposal, please fill out the form below indicating whether or not you want to be retained on our current vendor list.

Vendors who do not respond in any way (by either submitting a bid or by returning this form) over a period of one year may be removed from the current vendor list.

Vendors who do not wish to bid often return the entire bid package, sometimes at considerable postage expense. Returning the entire bid package is not necessary. Simply return this form.

Thank you for your cooperation.
Cobb County Purchasing Department

"STATEMENT OF NO BID"
SEALED BID NUMBER 10-5519
REQUEST FOR PROPOSAL
HVAC SYSTEM IMPROVEMENTS PROJECT
ADMINISTRATION BUILDING
10 EAST PARK SQUARE
MARIETTA, GEORGIA 30060

If you do not wish to respond to the attached Invitation to Bid/Request for Proposal, please complete this form and mail/fax to: **Cobb County Purchasing Department, Attention: Sealed Bid Department, 1772 County Services Parkway, Marietta, GA. Fax # 770-528-1154**

I do not wish to submit a bid/proposal on this solicitation.

I wish to be retained on the vendor list for this commodity or service: Yes_____ No ____

Please PRINT the following:

_____ _____
Company Representative

You are invited to list reasons for your decision not to bid: _____
_____
_____

COBB COUNTY REQUEST FOR COMPETITIVE SEALED PROPOSALS

HVAC SYSTEM IMPROVEMENTS PROJECT
COBB COUNTY ADMINISTRATIVE BUILDING
10 EAST PARK SQUARE
MARIETTA, GEORGIA 30060

SEALED BID NUMBER: 10-5519

COBB COUNTY REQUEST FOR COMPETITIVE SEALED PROPOSALS

HVAC SYSTEM IMPROVEMENTS PROJECT
COBB COUNTY ADMINISTRATIVE BUILDING
10 EAST PARK SQUARE
MARIETTA, GEORGIA 30060

SEALED BID NUMBER: #10-5519

TABLE OF CONTENTS

Advertisement	Page 3
Introduction	Pages 4
Background	Pages 4
Scope of Services	Page 5
Selection Criteria	Page 6
Special Terms and Conditions	Page 8
Conflict of Interest Statement	Page 13
Officer's Oath	Page 14
General Instructions to Proposers	Page 15
Georgia Security and Immigration Compliance Act	Page 24
Disadvantaged Business Enterprises	Page 30
Payment Bond Form	Page 34
Performance Bond Form	Page 37
Attachment B - Special Terms For ARRA and EECBG Projects	Page 40
Attachment B-1 - Davis Bacon Wages	Page 47
Bid Form	Page 52
Plans and Documents	Attachments
Sample Contract Form	Attachment

COBB COUNTY REQUEST FOR COMPETITIVE SEALED PROPOSALS

HVAC SYSTEM IMPROVEMENTS PROJECT
COBB COUNTY ADMINISTRATIVE BUILDING
10 EAST PARK SQUARE
MARIETTA, GEORGIA 30060

The Cobb County Board of Commissioners (Owner) is soliciting competitive sealed proposals from experienced firms for replacement of the HVAC System for the **Cobb County Administrative Building located at 10 East Park Square, Marietta, GA.** This Project includes equipment replacement, fitting and wiring of new equipment, and demolition of existing equipment. An award will be made to the responsible and responsive offeror whose proposal is determined to be the most advantageous to Cobb County. Proposals will be received until **12:00 noon, September 9, 2010** at the Cobb County Purchasing Department located at 1772 County Services Parkway, Marietta, Georgia 30008. Any proposal received after this time will not be opened. Proposals, timely received, will be opened at 2:00 PM (local time) on September 9, 2010 at the offices of the Cobb County Purchasing Department, 1772 County Services Parkway, Marietta, Georgia 30008. Request for Proposal packages, which include floor plans and elevation drawings describing the requested services as well as the relative importance of the evaluation factors will be available upon request on the Cobb County Purchasing website: purchasing.cobbcountyga.gov.

The Cobb County Board of Commissioners reserves the right to reject all proposals, to waive technicalities and informalities, to reject portions of the proposals, and to award contracts in a manner consistent with the interest of Cobb County and the laws of the State of Georgia.

All proposals shall be accompanied by a bid bond in the amount not less than five percent (5%) of the cost proposal. No proposal shall be considered if a proper bid bond or other authorized security has not been submitted. The successful offeror will be required to furnish a satisfactory performance bond and labor and materials payment bond, on forms provided by Owner.

No offeror may withdraw its proposal and must honor its proposal for 90 days after the actual date of the opening thereof.

I. Introduction

During the competitive sealed proposal process, proposals received will be opened in a manner so as to avoid disclosure of contents to competing offerors and during any process of discussion, the County will not disclose the contents of proposals to competing offerors.

Each firm is to prepare its proposal according to the RFP format, i.e., by section and paragraph of this RFP. Cobb County reserves the right to reject any proposal not submitted within the required time frame; reject any incomplete proposal submitted; contact client references; require further information; and/or require interviews/presentations from any responding firm. All costs related to the preparation, submittal, and/or presentation of a proposal are the responsibility of the offeror and will not be assumed in full or in part by Cobb County. All proposals shall be accompanied by a bid bond in the amount not less than five percent (5%) of the cost proposal. No proposal shall be considered if a proper bid bond or other authorized security has not been submitted.

Written inquiries regarding this RFP may be addressed to:
Cobb County Purchasing Department
1772 County Services Parkway
Marietta, Georgia 30008
Fax: 770-528-1154
Email: purchasing@cobbcounty.org

Written responses to all written inquiries received by 5:00 p.m., Tuesday, August 31, 2010 will issued in the form of an addendum.

Submit an original and three (3) copies of this RFP to:
Cobb County Purchasing Department
1772 County Services Parkway
Marietta, Georgia 30008

Proposals must be submitted before **12:00 noon, September 9, 2010. Proposals must be received in a sealed envelope or container. Place the Project name, BID number, and opening date on the submitting envelope or container.** Proposals will be opened on this same date at 2:00 pm at the Cobb Purchasing Department.

A pre-proposal Conference will be held on Tuesday, August 24, 2010 at 9:00am at the Cobb County Property Management Meeting Room located at 57 Waddell Street in Marietta, Georgia. All firms intending to respond to this Request for Proposals are strongly urged to attend.

II. Background

Cobb County intends to replace the HVAC mechanical equipment at the 10 East Park Square Building. This equipment will be replaced during while normal building operations are being conducted. This invitation is for the permitting, construction, and complete construction management to finish the project. Basis for the design are the attached floorplans and

specifications already prepared. These plans will be available to all proposers.

Cobb County will be the Owner and primary occupant of the Project. The Owners' tentative schedule for this project is; select Contractor by Sept 20, 2010; issue Notice to Award by Sept 29, 2010; order long lead time equipment; begin construction by Jan 3, 2011 and complete project by March of 2011

Cobb County has received funding provided by the American Reinvestment and Recovery Act of 2009 (ARRA) under an Energy Efficiency and Conservation Block Grant (EECBG) administered by the U.S. Dept. of Energy for performing energy efficiency retrofits of county facilities.

All contracts and work associated with this project are subject to the terms and conditions of the American Reinvestment and Recovery Act of 2009 (ARRA) and the Energy Efficiency and Conservation Block Grant (EECBG) awarded to the County through which funding for this project is provided. The County's "Special Terms and Conditions of the ARRA and EECBG" are included incorporated in the RFP (Attachment B) and shall be incorporated in the Design/Build contract. Bidders may also view the EECBG grant award and associated terms and conditions by viewing the EECBG link on http://purchasing.cobbcountyga.gov/ to further familiarize themselves with the requirements of the grant.

1. Included in these conditions are requirements that all iron, steel, and manufactured goods used in the project be produced in the United States unless a waiver of the requirements is approved by the Department of Energy per section 1605 of the ARRA (Part 2, II-C of Attachment B).

Bidders should be particularly diligent in ensuring conformity with the Buy American requirements specified, and ensure components and manufactured products they price and offer for inclusion in this project are made in the United States. Products manufactured in countries outside the United States, regardless of whether the country of origin is a member of any Free Trade or similar economic agreement with the United States, are not permitted to be included in this project unless the Dept. of Energy has issued a specific exclusion. As of the issuance of this ITB, the Owner is unaware of any exclusions issued for products anticipated to be included in this project.

2. Under the conditions of the funding grant, contractors or their subcontractors are to pay workers employed directly upon the site of the work no less than the locally prevailing wages and fringe benefits paid on projects of a similar character as determined by the U.S. Dept. of Labor Wage Determination applicable on the bid issuance date for the construction type and work location. **For this project, General Decision Number: GA100255 dated 7/9/2010 GA255, is applicable. The applicable wage rates are included in this bid as Attachment B-2.**

III. Scope of Services

The following is a listing of some of the representative services to be provided by the selected Contractor. The full scope of services will be defined within the contract executed with Cobb County.

A. Construction Phase

1. Maintain on-site staff during any construction activities.
2. Establish and maintain coordinating procedures.
3. Develop and maintain a detailed schedule (CPM) including delivery, approvals, inspection, testing, construction, and occupancy.
4. Prepare and submit change order documentation for approval of the Engineer and the County.
5. Maintain a system for review and approval of shop drawings.
6. Maintain quality control and ensure conformity to plans.
7. Obtain all Third Party Special Inspections as required by permitting authority.
8. Provide cost control through progress payment review and verifications according to the approved schedule and contract amounts.
9. Obtain Certificate of Occupancy and other relevant documents for Owner to use facility.
10. Develop as-built drawings and deliver to Engineer for inclusion into a CADD disk to be submitted to Cobb County for maintenance and operations use.
11. Coordinate post-completion activities, including the assembly of guarantees, manuals, closeout documents, training, and the Owner's final acceptance.
12. Prepare and provide documentation to confirm compliance with ARRA and EECBG requirements per attached Exhibit A.

B. Warranty Phase

1. Coordinate and monitor the resolution of remaining "punch-list" items.
2. Coordinate, monitor, and resolve all warranty issues to the satisfaction of the County during the one-year general warranty period and as extended.

All Local, County, State, and Federal Codes and regulations must be followed, with particular emphasis on Building Codes, Life Safety Codes, and the Americans with Disabilities Act.
Once all contract documents are executed, between the County and the successful offeror, the successful offeror will be required to deliver the services required by this RFP. Cobb County must first approve any change in or substitution of project team members, including any consultant, in writing.

IV. Selection Criteria

The Competitive Sealed Proposals will be evaluated based on the information presented in the proposal package. The Owner may conduct such investigations or interviews, as it deems necessary to assist in the evaluation of any proposal submitted and to establish to Cobb County's satisfaction the responsiveness to the RFP, responsibility, qualifications, and financial status of any offeror.

The selection may be based solely on the evaluation of the information presented in the proposal package. Firms submitting proposals should not assume that the Owner will elect to pursue any discussion or interviews of the proposals.

Financial/Responsiveness/Cost Criteria **100 Points**

Review the completeness of proposal form, bond, and assessment of financial information and company qualifications. **40 Points**

The construction cost proposal amount and project schedule **60 Points**

The RFP should be prepared per the following Sections as well as a one-page letter of transmittal signed by an owner, officer, or authorized agent of the firm acknowledging and accepting the terms and conditions of this RFP and an executed Conflict of Interest Statement. An executed "Officer's Oath" on the form provided will be required of the successful offeror prior to commencing work. The officer shall file the oath whose duty it is to make the payment. If the contractor is a partnership, all of the partners and any officer, agent, or other person who may have represented or acted for them in bidding for procuring the contract shall also make the oath. If the contractor is a corporation, all officers, agents, or other persons who may have acted for or represented the corporation in bidding for or procuring the contract shall make the oath. If such oath is false, the contract shall be void, and all sums paid by the County on the contract may be recovered by appropriate action. The Contractor Immigration compliance form must be provided with bid documents.

Provide the following Qualifications and Information:

A. **Firm or Firms' Information**

1. Firm local name, address, and telephone number
2. Primary local contact person(s) and telephone number(s)
3. Total number of firm's local full-time employees
4. Year firm established
5. Local firm's billings for the last three fiscal years
6. Local firms' billing for the current fiscal year
7. Listing and description of last 3 years of litigation involving the local firm
8. Listing and description of all litigation history for the local firm including 2008
9. Copy of the most recent 3 completed years of audited financial statements (Income Statement and Balance Sheet) for the local firm
10. Offeror must provide a letter of commitment from Surety or sureties regarding bonding capacity and availability.
11. Cost proposal amount
12. List any OSHA violations within the past 3 years.
13. State your Experience Modification Factor, for the past 3 years, as related to your Workman's Comp Rates.
14. List the five most recent projects on which the firm was required to comply with Davis-Bacon Fair Labor Wage requirement. Include the name of project manager and client references, including name and contact information.
15. Provide the current active DUNS number for your firm and the current CCR registration number (CAGE or NCAGE) if available. If not available, a statement of intent that the firm will register in CCR in a timely manner upon Owner notification of intent to award (Part 2, II-B-1 of Exhibit B).

V. SPECIAL TERMS AND CONDITIONS

MODIFICATION OR WITHDRAWAL OF PROPOSALS

A submitted proposal may be retrieved in person by an offeror or its authorized representative if, before the scheduled closing time for receipt of proposals, the identity of the persons requesting retrieval is established and that person signs a receipt for the proposal. If the proposal is retrieved for modification, the sealed proposal must be resubmitted prior to the scheduled closing time for receipt of proposals. If the proposal is not resubmitted, it will be considered as withdrawn.

MISTAKES; CORRECTIONS AND WITHDRAWAL OF PROPOSALS

After proposals are opened, if the low Offeror claims a serious and honest error in proposal preparation, and can support such claim with evidence satisfactory to the Owner, withdrawal of the proposal without forfeiture of the bid security will be permitted. As a condition of this release, the low Offeror will be prohibited from:

1) Subcontracting or furnishing labor or equipment on this project.
2) Bidding on any Cobb County System projects within ninety (90) days of release by Owner.

Any questions concerning this request for proposals should be directed in writing via letter or facsimile, no later than **5:00 p.m. on August 31, 2010**, to:

Cobb County Purchasing Department
1772 County Services Parkway
Marietta, GA 30008-4021
FAX: (770) 528-1154
E-mail: purchasing@cobbcounty.org

SITE EXAMINATION

The site of the proposed work is shown on the drawings. The Offeror, before making his proposal, shall examine the drawings, specifications and the site and shall make such examinations as may be necessary to thoroughly familiarize themselves with the nature and extent of the proposed construction and with all local conditions affecting the work. The Offeror shall also accept the premises in its present condition and carry out all work in accordance with the requirements of the specifications and as shown on the drawings. The Owner will not be responsible for Offeror's errors and misjudgment nor for failure to obtain any information on local conditions or general laws or regulations pertaining thereto. At the time of the opening of proposals, each Offeror will also be presumed to have read and to be thoroughly familiar with the drawings, Contract Documents (including all addenda), and the construction specifications. The failure or omission of any Offeror to examine any form, instrument, or document shall in no way relieve any Offeror from any obligation in respect to his proposal.

Notice of SPECIAL CONDITIONS;

See Attachment B for ARRA and EECBG requirements on project.

LAWS AND REGULATIONS; LICENSING

The Offeror's attention is directed to the fact that all applicable Federal and state laws, county and municipal ordinances and the rules and regulations of all authorities having jurisdiction over construction of the project shall apply to the

Contract throughout, and they will be deemed to be included in the Contract the same as though herein written out in full.

The State of Georgia has requirements for the licensing of contractors engaged in specific types of construction, including general contracting, electrical, plumbing, and underground utility work [re: OCGA § 43-14]. Any contractor (or subcontractor of any tier) performing regulated work on this project shall furnish proof of valid and current registration to the Owner. Similarly, the State requirements concerning local business licenses shall be met.

EXECUTION OF COMPETITIVE SEALED PROPOSALS

The Offeror, in signing his proposal on the whole or any portion of the work, shall conform to the following requirements:

1. Competitive Sealed Proposals, which are not signed by individuals providing said proposal shall have attached thereto a power of attorney evidencing authority to sign the proposal in the name of the person for whom it is signed.
2. Competitive Sealed Proposals, which are signed for a partnership shall be signed by all of the partners or by an attorney-in-fact. There should be attached to the proposal a power of attorney executed by the partners evidencing authority to sign the proposal.
3. Competitive Sealed Proposals, which are signed for a corporation shall have the correct corporate name thereof and the signature of the president or other authorized officer of the corporation manually written below the corporate name following the wording "By _____." The corporate seal shall also be affixed to the proposal.

NON-COLLUSION AFFIDAVIT

The Georgia statute concerning public works construction contracting requires that any person who procures such work by bidding or proposal shall make an oath in writing that he/she has not prevented or attempted to prevent competition in such bidding [OCGA § 36-91-21(d),(e)]. If the Design/Builder is a partnership, all of the partners and any officer, agent, or other person who may have represented or acted for them in bidding for or procuring the contract shall make the oath and complete the Affidavit. If the Design/Builder is a corporation, all officers, agents, or other persons who may have acted for or represented the corporation in bidding for or procuring the contract shall make the oath and complete the Affidavit. If such oath is false, the Contract shall be void, and all sums paid by the County on the Contract may be recovered by appropriate action.

CONTRACT PERFORMANCE BOND AND PAYMENT BOND

The Contractor will be required to furnish a contract performance bond and a payment bond executed by a surety company on bond forms provided by the Owner. (samples attached). This company must be listed in the latest issue of U.S. Treasury Circular 570, registered, and duly authorized to do business in the State of Georgia. The bond must be signed (or countersigned) by a local agent, each in an amount that is at least equal to one-hundred percent (100%) of the Contract Price, as security for the faithful performance of this contract and as security for the payment of all persons performing labor and furnishing material in connection with the Contract. Utilize your current budget for the project for bond amount. The bond amount will be adjusted to the final price once it is agreed upon.

The surety shall be acceptable to the Owner and the bond shall be executed on the form attached. In case of default on the part of the Contractor, all expenses incident to ascertaining and collecting losses under the bond, including both engineering and legal services, shall lie against the bond.

The Contractor will be required to provide the Owner a one-year guarantee covering workmanship and materials of the project. The contract performance bond shall remain in force for one year from date of project acceptance by the Owner. The cost of this bond shall be paid by the Contractor.

INSURANCE PROOF OF COVERAGE

Contractor shall procure and maintain for the duration of the contract, insurance against claims for injuries to persons or damages to property that may arise from or in connection with performance of the Work hereunder by the Contractor, his agents, representatives, employees, or subcontractors.

A. MINIMUM LIMITS OF INSURANCE
Contractor shall maintain limits no less than:

1. General Liability: $1,000,000 combined single limit per occurrence for comprehensive coverage including bodily injury, personal injury and property damage for premises/operations, products/completed operations, contractual liability, independent contractors, broad-from property damage, and underground, explosion and collapse hazard.

2. Automobile Liability: $1,000,000 combined single limit per accident for bodily injury and property damage including all owned, hired, and non-owned.

3. Workers' Compensation and Employers Liability: Workers' Compensation limits as required by the Labor code of the State of Georgia and Employers Liability of $100,000 per accident.

4. Umbrella Liability: $5,000,000 combined single limits per occurrence.

5. Builders Risk Insurance, if applicable: All Risk coverage on any buildings, structure of work and material in an amount equal to 100 per cent of the value of the contract. Coverage is to cover Cobb County interest and Cobb County shall be named as Loss Payee.

B. DEDUCTIBLES AND SELF-INSURED RETENTION
Any deductibles or self-insurance retentions must be declared to and approved by the Owner. At the option of the Owner, either: The insurer shall reduce or eliminate such deductibles or self-insured retentions as respects the Owner, its officers officials, and employees; or the Contractor shall procure a bond guaranteeing payment of losses related to investigations, claim administration and defense expenses.

C. OTHER INSURANCE PROVISIONS

1. General Liability, Automobile Liability, and Umbrella Liability Coverages
The Owner and its officers, officials, employees and volunteers are to be covered as additional insureds as respects: liability arising out of activities performed by or on behalf of the Contractor.

Any failure to comply with reporting provisions of the policies shall not affect coverage provided to the Owner and its officers, officials employees or volunteers.

The Contractor is responsible for insuring its own property and equipment.

2. Workers' Compensation and Employers Liability Coverage. The insurer shall agree to waive all rights of subrogation against the Owner and its officers, officials, employees and volunteers for losses arising from the work performed by the Contractor for the Owner.

3. All Coverages: Each insurance policy required by this clause shall be endorsed to state that coverage shall not be changed, cancelled, suspended, terminated or non-renewed except after thirty (30) days prior written notice by certified mail, return receipt requested, has been given to Cobb County of said change of coverage, cancellation, suspension, termination / or non-renewal.

D. ACCEPTABILITY.

Insurance is to be placed with insurers with a Best's rating of no less than A: VII, or otherwise acceptable to the Owner.

E. VERIFICATION OF COVERAGE.

Contractor shall furnish the Owner with certificates of insurance and with original endorsements effecting coverage required by this clause. These certificates and endorsements for each insurance policy are to be signed by a person authorized by that insurer to bind coverage on its behalf. The certificates and endorsements are to be received and approved by the Owner before any work commences. The Owner reserves the right to require complete, certified copies of all required insurance policies at any time.

F. SUBCONTRACTORS

Subcontractor means one not in the employment of the Contractor who is performing all or part of the services under this Agreement under a separate contract with the Contractor.

Contractor shall include all subcontractors as insured under its insurance or shall ensure that subcontractors have met the insurance requirements of this agreement. Owner may request evidence of subcontractor’s insurance.

Contractor is responsible for having all subcontractors comply with all terms and conditions of the Invitation to Bid.

G. WAIVER OF SUBROGATION

Vendor shall require all insurance policies in any way related to the work and secured and maintained by Vendor to include clauses stating each underwriter shall waive all rights of recovery, under subrogation or otherwise, against Customer. Vendor shall require of subcontractors, by appropriate written agreements, similar waivers each in favor of all parties enumerated in this section.

AWARD OF CONTRACT

The Offeror to whom the Contract is being awarded will be required to execute the agreement and obtain the performance bond, payment bond and provide insurance certificates acceptable to the Owner within twenty-one calendar days from the date when the notice of award is issued to the Offeror. Bond amount will be based on the cost of the projects proposal, including any alternates selected by the Owner. In case of failure of the Offeror to execute the agreement or provide insurance or meet bonding requirements, the Owner may consider the Offeror in default, in which case the bid security accompanying the proposal shall become payable to the Owner.

OWNERSHIP OF PROPOSAL DOCUMENTATION

Upon receipt of the Proposal by the Owner, the Proposal and all included documentation shall become the property of the Owner, without compensation to the Offeror, for disposition or usage by the Owner at its discretion. The Owner assumes no responsibility or obligation to firms providing proposals and will make no payment for any costs associated with the preparation or submission of proposals. All work, including but not limited to planning, programming, cost estimates and summaries, plans, specifications and other materials prepared by or for the firms proposing to the Owner under this Invitation for Proposals shall become the property of the Owner

Conflict of Interest Statement

As a duly authorized representative of the firm _____

I, _____with the title_____certify

that to the best of my knowledge no circumstances exist that will cause a conflict of interest in performing services for Cobb County Government, that no employee of Cobb County, nor any public agency official or employee affected by this Request for Proposals has any pecuniary interest in the business of this firm, associates or consultants of this firm, or the firm's parent firm, subsidiary, or other legal entity of which this firm is a part, and that no person associated with or employed by this firm has any interest that would conflict in any way, manner or degree with the performance of services for Cobb County Government.

Date: _____

Company Name: _____

Authorized Representative Name: _____

Title: _____

Signature: _____

Officer's Oath

As a duly authorized representative of the firm involved in the bidding for or procuring the contract _____
I, _____with the title_____certify that I did not prevent or attempt to prevent competition in such proposals by any means whatsoever. Nor did I prevent or endeavor to prevent anyone from making a proposal therefore by any means whatsoever, or induce another to withdraw a proposal for the work.

Date: _____

Company Name: _____

Authorized Representative Name: _____

Title: _____

Signature: _____

Cobb County General Instructions for Proposers, Terms and Conditions

I. Preparation of Proposals

Each proposer shall examine the drawings, specifications, schedule and all instructions. Failure to do so will be at the proposer's risk, as the proposer will be held accountable for their proposal response.

Each proposer shall furnish all information required by the proposal form or document. Each proposer shall sign the proposal and print or type his or her name on the schedule. The person signing the proposal must initial erasures or other changes. An authorized agent of the company must sign proposals.

Requests for Proposals (RFP) issued by Cobb County are advertised on the Cobb County Internet site (www.purchasing.cobbcountyga.gov) and every Friday in the Cobb County legal organ, the Marietta Daily Journal.

II. Delivery

Each proposer should state time of proposed delivery of goods or services. Words such as "immediate", "as soon as possible", etc. shall not be used. The known earliest date or the minimum number of calendar days required after receipt of order (delivery A.R.O.) shall be stated (if calendar days are used, include Saturday, Sunday and holidays in the number).

III. Explanation to Proposers

Any explanation desired by a proposer regarding the meaning or interpretation of the Request for Proposal, drawings, specifications, etc. must be received by **5:00 p.m. Tuesday, August 31, 2010** in order for a reply to reach all proposers before the close of the bid. Any information concerning an RFP will be furnished to all prospective proposers as an addendum to the invitation if such information is necessary or if the lack of such information would be prejudicial to uninformed proposers.

The written proposal documents supersede any verbal or written communication between parties. Addenda are posted on the Purchasing web site: www.purchasing.cobbcountyga.gov. Receipt of addenda should be acknowledged in the submitted proposal. It is the proposer's ultimate responsibility to ensure that they have all applicable addenda prior to bid submittal.

IV. Submission of Proposals

Proposals shall be enclosed in a sealed package, addressed to the Cobb County Purchasing Department with the name and address of the proposer, the date and hour of opening, and the request for proposal number on the face of the package. Telegraphic/faxed proposals will not be considered. Any addenda should be enclosed in the sealed envelopes as well.

Unsigned proposals will not be considered.

Cobb County is exempt from federal excise tax and Georgia sales tax with regards to goods and services purchased directly by Cobb County. Suppliers and contractors are responsible for federal excise tax and sales tax, including taxes for materials incorporated in county construction projects. Suppliers and contractors should contact the State of Georgia Sales Tax Division for additional information.

Except as otherwise provided by law, information submitted by a proposer in the proposal process shall be subject to disclosure after proposal award in accordance with the Georgia Open Records Act. Proprietary information must be identified. Entire proposals may not be deemed proprietary.

V. Withdraw Proposal Due To Error

The proposer shall give notice in writing of his claim of right to withdraw his proposal without penalty due to an error within two (2) business days (48 hours) after the conclusion of the proposal opening. Proposals may be withdrawn from consideration if the price was substantially lower than the other proposals due solely to a mistake therein, provided the proposal was submitted in good faith, and the mistake was a clerical mistake as opposed to a judgment mistake, and was actually due to an unintentional arithmetic error or an unintentional omission of a quantity of work, labor or material made directly in the compilation of the proposal, which unintentional arithmetic or unintentional omission can be clearly shown by objective evidence drawn from inspection of original work papers, documents and materials used in the preparation of the proposal sought to be withdrawn. The proposer's original work papers shall be the sole acceptable evidence of error and mistake if he elects to withdraw his proposal. If a proposal is withdrawn under the authority of this provision, the lowest remaining responsive proposal shall be deemed to be low proposal. Proposal withdrawal is not automatically granted and will be allowed solely at the discretion of Cobb County.

No proposer who is permitted to withdraw a proposal shall, for compensation, supply any material or labor or perform any subcontract or other work agreement for the person or firm to whom the contract is awarded or otherwise benefit, directly or indirectly, from the performance of the project for which the withdrawn proposal was submitted.

VI. F.O.B. Point

Unless otherwise stated in the request for proposal and any resulting contract, or unless qualified by the proposer, items shall be shipped F.O.B. Destination. The seller shall retain title for the risk of transportation, including the filing for loss or damages. The invoice covering the items is not payable until the items are delivered and the contract of carriage has been completed. Unless the F.O.B. clause states otherwise, the seller assumes transportation and related charges either by payment or allowance.

VII. Patent Indemnity

The contractor guarantees to hold the County, its agents, officers or employees harmless from liability of any nature or kind for use of any copyrighted or uncopyrighted composition, secret process, patented or unpatented invention, articles or appliances

furnished or used in the performance of the contract, for which the contractor is not the patentee, assignee or licensee.

VIII. Award

Award will be made to the highest scoring responsive and responsible proposer according to the criteria stated in the proposal documents. The County may make such investigations as it deems necessary to determine the ability of the proposer to perform, and the proposer shall furnish to the County all such information and data for this purpose as the County may request. The County reserves the right to reject any proposal if the evidence submitted by, or investigations of such proposer fails to satisfy the County that such proposer is properly qualified to carry out the obligations of the contract.

The County reserves the right to reject or accept any or all proposals and to waive technicalities, informalities and minor irregularities in the proposals received. The County reserves the right to make an award as deemed in its best interest which may include awarding a proposal to a single proposer or multiple proposers; or to award the whole proposal, only part of the proposal, or none of the proposal to single or multiple proposers, based on its sole discretion of its best
interest.

Time payment discounts will be considered in arriving at net prices and in award of proposal.

IX. County Furnished Property

The County will furnish no material, labor or facilities unless so provided in the RFP.

X. Rejection of Proposals

Failure to observe any of the instructions or conditions in this request for proposal may constitute grounds for rejection of proposal.

XI. Contract

Each proposal is received with the understanding that the acceptance in writing by the County of the offer to furnish any or all of the commodities or services described therein shall constitute a contract between the proposer and the County which shall bind the proposer on his part to furnish and deliver the articles quoted at the prices stated in accordance with the conditions of said accepted proposal. The County, on its part, may order from such contractor, except for cause beyond reasonable control, and to pay for, at the agreed prices, all articles specified and delivered.

Upon receipt of a proposal containing a Cobb County "Sample Contract" as part of the requirements, it is understood that the proposer has reviewed the documents with the understanding that Cobb County requires that all agreements between the parties must be entered into via these documents. If any exceptions are taken to any part, each exception

must be stated in detail and submitted as part of the proposal document. If no exceptions are stated, it is assumed that the proposer fully agrees to the "Sample Contract" in its entirety. The County reserves the right to make changes to the "Sample Contract".

XII. Delivery Failures

Failure of a contractor to deliver within the time specified or within reasonable time as interpreted by the Purchasing Director, or failure to make replacements of rejected articles/services when so requested, immediately or as directed by the Purchasing Director, shall constitute authority for the Purchasing Director to purchase in the open market or rebid for articles/services of comparable grade to replace the articles/services rejected or not delivered. On all such purchases, the contractor shall reimburse the County within a reasonable time specified by the Purchasing Director for any expense incurred in excess of contract prices, or the County shall have the right to deduct such an amount from monies owed the defaulting contractor. Alternatively, the County may penalize the contractor one percent (1%) per day for a period of up to ten (10) days for each day that delivery or replacement is late. Should public necessity demand it, the County reserves the right to use or consume articles/services delivered which are substandard in quality, subject to an adjustment in price to be determined by the Purchasing Director.

XIII. Non-Collusion

By submission of a proposal, the proposer certifies, under penalty of perjury, that to the best of its knowledge and belief:

(a) The prices in the proposal have been arrived at independently without collusion, consultation, communications, or agreement, for the purpose of restricting competition, as to any matter relating to such prices with any other vendor or with any competitor.

(b) Unless otherwise required by law, the prices which have been quoted in the proposal have not been knowingly disclosed by the proposer prior to opening, directly or indirectly, to any other proposer or to any competitor

(c) No attempt has been made, or will be made, by the proposer to induce any other person, partnership or corporation to submit or not to submit a proposal for the purpose of restricting competition.

Collusion and fraud in bid preparation shall be reported to the State of Georgia Attorney General and the United States Justice Department.

XIV. Conflict Of Interest, Etc.

By submission of a proposal, the proposer certifies, under penalty of perjury, that to the best of its knowledge and belief:

1. No circumstances exist which cause a Conflict of Interest in performing the services required by this RFP, and
2. That no employee of the County, nor any member thereof, not any public agency or official affected by this RFP, has any pecuniary interest in the business of the responding firm or his sub-consultant(s)

has any interest that would conflict in any manner or degree with the performance related to this RFP.

The responding firm also warrants that he and his sub-consultant(s) have not employed or retained any company or person other than a bona fide employee working solely for the responding firm or sub-consultant(s) to solicit or secure a contract agreement with Cobb County, as related to this RFP, and that he and his sub-consultant(s) have not paid or agreed to pay any person, company, corporation, individual, or firm other than a bona fide employee working solely for the responding firm or his sub-consultant(s) any fee, commission, percentage, gift, or other consideration contingent upon or resulting from the award of this Agreement.

For any breach or violation of this provision, the County shall have the right to terminate any related contract or agreement without liability and at its discretion to deduct from the price, or otherwise recover, the full amount of such fee, commission, percentage, gift, payment or consideration.

The successful responding firm shall require each of its sub-consultant(s) to sign a statement certifying to and agreeing to comply with the terms of the subsections above.

XV. Default

The contract may be cancelled or annulled by the Purchasing Director in whole or in part by written notice of default to the contractor upon non-performance or violation of any contract term. An award may be made to the next highest rated responsive and responsible proposer, or articles specified may be purchased on the open market similar to those terminated or the County may issue a new Request for Proposal. In any event, the defaulting contractor (or his surety) shall be liable to the County for costs to the County in excess of the defaulted contract prices; provided, however, that the contractor shall continue the performance of this contract to the extent not terminated under the provisions of this clause. Failure of the contractor to deliver materials or services within the time stipulated on its proposal, unless extended in writing by the Purchasing Director, shall
constitute contract default.

XVI. Disputes

Except as otherwise provided in the contract documents, any dispute concerning a question of fact arising under the contract which is not disposed of shall be decided after a hearing by the Purchasing Director who shall reduce his/her decision to writing and mail or otherwise furnish a copy thereof to the contractor. The decision of the Purchasing Director shall be final and binding, however, the contractor shall have the right to appeal said decision to a court of competent jurisdiction.

XVII. Substitutions

Proposers offering and quoting on substitutions or who are deviating from the attached specifications shall list such deviations on a separate sheet to be submitted with their

proposal. The absence of such a substitution list shall indicate that the proposer has taken no exception to the specifications contained therein.

XVIII. Ineligible Proposers

The County may choose not to accept the proposal of one who is in default on the payment of taxes, licenses or other monies owed to the County. Failure to respond three (3) consecutive times for any given commodity may result in removal from the list under that commodity.

XIX. General Information

Sealed proposals, with original signatures, will be accepted by the County Purchasing Department at the time, place, and date specified. One (1) original and three (3) copies of the proposal must be submitted, complete with a cover letter signed by an official within the organization who has authority over project negotiation.

These proposals must be in accordance with the purposes, conditions, and instructions provided in this RFP. The Cobb County Board of Commissioners assumes no responsibility for proposals received after the submission time, whether due to mail delays or any other reason. Proposals received after the submission time will be filed unopened and considered non-responsive.

As previously stated under IV, unsigned proposals will not be considered.

Cobb County reserves the right to retain all proposals submitted, and to use any idea in any proposal regardless of whether that proposal is selected. All work performed by the successful respondent shall be performed in compliance with the Americans With Disabilities Act.

XXI. Uniformity of Proposal

To facilitate comparative analysis and evaluation of proposals it is desired that a uniform format be employed in structuring each proposal. The respondent's degree of compliance with the requirements of the RFP will be a factor in the subsequent point-based evaluation of the proposal. Proposals with major deviations or omissions many not be considered for detailed study. Proposals will become part of the contract with Cobb County should they be selected under the RFP.

XXII. Request Additional Information

Inquiries that must be answered in regards to the Proposal procedures or technical matters shall be submitted in writing to:

Cobb County Purchasing Division
1772 County Services Parkway
Marietta, Georgia 30008-4021
Fax: (770) 528-1154
Email: purchasing@cobbcounty.org

Correspondence should be submitted only to the designated individual. All inquiries must be in writing. Cobb County will not orally or telephonically address any question or clarification regarding specifications or procedures. Cobb County is not bound by any oral representations, clarifications, or changes made to the written specification by County employees, unless such clarification or change is provided to the respondent in written addendum from Cobb County.

XXIII. Firm Prices

Prices quoted by proposal shall be firm and best prices. Prices quoted must be valid for a minimum of ninety (90) days from the date of bid opening.

XXIV. Proposal/Presentation Costs

The cost for developing a proposal will be borne by the respondent. Cobb County is not liable for any costs incurred by the respondent in preparation and/or presentation of proposals in response to this RFP or for travel and other costs related to this RFP.

XXV. Proposal Format

Presentation of the relevant information is at the discretion of the respondent; however, the proposal must address all items identified in Section Titled, Proposal Requirements. To assist in the evaluation of proposals resulting from the RFP, it is recommended that each proposal be written in a concise and forthright manner and that unnecessary marketing statement and materials be avoided.

XXVI. Indemnification/Hold Harmless

By submission of a proposal, the selected responding firm agrees to indemnify Cobb County to the fullest extent permitted by law, protect, defend, indemnify and hold harmless Cobb County, its officers, officials, employees and volunteers from and against all claims, actions, liabilities, losses (including economic losses), or costs arising out of any actual or alleged a) bodily injury, sickness, disease, or death; or injury to or destruction of tangible property including the loss of use resulting there from; or any other damage or loss arising out of or resulting claims resulting in whole or part from any actual or alleged act or omission of the responding firm, sub-consultant, anyone directly or indirectly employed by any of them; or anyone for whose acts any of them may be liable in the performance of work; b) violation of any law, statute, ordinance, governmental administrative order, rule, regulation, or infringements of patent rights or other intellectual property rights by the responding firm in the performance of work; or c) liens, claims or actions made by the responding firm or other party performing the work, as approved by Cobb County.

The indemnification obligations herein shall not be limited to any limitation on the amount, type of damages, compensation, or benefits payable by or for the responding firm or its sub-consultant(s), as approved by the County, under workers' compensation acts, disability benefit acts, other employee benefit acts, or any statutory bar or insurance.

XXVII. Proposal Evaluation

The Evaluation process will address current requirements and consider possible future operation and maintenance needs. Both objective and subjective rationale will be involved in the decision process.

1. Evaluation Responsibility
   A selection committee will coordinate the review of all proposals and will submit a recommendation to the County Manager and Board of Commissioners.
2. Presentations
   During the evaluation process, the members of the selection committee may require that responding firms conduct a presentation. If required, these presentations will be scheduled in advance and limited in time. Location of the presentations will be pre-arranged.
3. Evaluation Criteria
   The County will use a specific set of criteria for the qualitative evaluation of competitive proposals. The structure of the evaluation will be to assign points to each response in a number of categories. A non-response to a specific category will result in no points being awarded for that category. Final rankings will be based on a combination of price and qualitative factors.

All proposal requirements must be met, or capable of being met by the responding firm or the proposal will be disqualified as non-responsive. It is extremely important that project schedules are met. Only those firms or teams with the necessary resources and a commitment to complete all project work on schedule should submit a Proposal.

XXVIII. Multi-Year Contract Provisions

The successful respondent will be required to enter into a contract containing the provisions as required by Georgia law pertaining to multi-year contracts. The following is a sample of the provision and will be adjusted as to the term or as to the length of the contract.

This contract shall terminate absolutely and without further obligation on the part of Cobb County at the close of the calendar year in which it was executed, and at the close of each succeeding calendar year for which it may be renewed as provided in O.C.G.A. Section 36-60-13. The contract shall automatically renew for each of the remaining calendar years provided for in the contract, unless positive action is taken by Cobb County to terminate such contract, and the nature of such action shall be written notice provided to the consulting firm within sixty (60) days before the end of the initial year of the contract or each succeeding remaining calendar year.

This contract shall terminate immediately and absolutely at such time as appropriated and otherwise unobligated funds are no longer available to satisfy the obligations of Cobb County under this contract.

XXIX. Proposal Requirements

The respondents must demonstrate competence and experience in the area of expertise outlined in this Request for Proposal.

If required, respondents must demonstrate competence and experience in public speaking and graphic presentations for the purpose of conveying project information to large and diverse community groups. Respondents should also be able to demonstrate the ability to build consensus among public and private interest groups related to this project.

XXX. Cover Letter/Executive Summary

Respondents shall provide a cover letter or letter of transmittal to briefly summarize the company's interest and relevant qualifications for the project. This letter shall not exceed two (2) pages, and shall be signed by an agent of the responding firm who is authorized to negotiate the details of the proposed services.

XXXI. Project Team

Respondents shall provide an organizational chart for the proposed project team, as well as the relevant background and experience for every proposed team member.

XXXII. Special Terms And Conditions

Should these General Terms and Conditions be in conflict with any attached Special Terms and Conditions, the Special Terms and Conditions will control.

Compliance with Georgia Security and Immigration Compliance Act

(Effective 7/1/10, Supersedes All Prior Versions)

BACKGROUND

Pursuant to the "Georgia Security and Immigration Compliance Act," Cobb County cannot enter into a contract for the physical performance of services unless the contractor registers and participates in the federal work authorization program to verify information of all newly hired employees or subcontractors. Neither may any contractor or subcontractor enter a contract with the county in connection with the physical performance of services unless the contractor and/or subcontractor registers and participates in the federal work authorization program to verify information of all new employees. O.C.G.A. § 13-10-91.

Before any bid for the physical performance of services is considered, the bid must include a signed, notarized affidavit from the contractor attesting to the following: (1) the affiant has registered with and is authorized to use the federal work authorization program; (2) the user ID number and date of authorization for the affiant; and (3) the affiant is using and will continue to use the federal work authorization program throughout the contract period. O.C.G.A. § 13-10-91 (b) (1). Affidavits shall be maintained for five years from the date of receipt. O.C.G.A. § 13-10-91 (b) (1).

Upon contracting with a new subcontractor, a contractor or subcontractor shall, as a condition of the contract or subcontract, provide Cobb County with notice of the identity of any and all subsequent subcontractors hired or contracted by that contractor or subcontractor within five (5) business days of entering into a contract or agreement for hire with any subcontractor. Such notice shall include an affidavit including the subcontractor's name, address, user ID number, and date of authorization to use the federal work authorization program. O.C.G.A. § 13-10-91 (b) (3).

Based upon the County's experience and desire for full compliance, no work may be commenced by any subsequent subcontractor prior to notice being received by the County that the subcontractor (regardless of tier) is in compliance with the law and the attached Procedures & Requirements, including the preparation and submission of the Contractor (or Subcontractor) Affidavit & Agreement AND the Immigration Compliance Certificate PRIOR to the commencement of any work.

DEFINITIONS

Affidavit – a written statement made or taken under oath before an officer of the court or a notary public or other person who duly has been authorized so to act.

Affiant – the person who makes and subscribes to a statement made under oath (affidavit).

Physical Performance of Services – the building, altering, repairing, improving, or demolishing of any public structure or building or other public improvements of any kind to public real property, including the construction, reconstruction, or maintenance of all or part of a public road; or any other performance of labor for a public employer under a contract or other bidding process.

PROCEDURES & REQUIREMENTS

1. Bid Documents: Bid documents should contain information regarding the contract language and contractual requirements described below.

2. Responsive Bid Documents: Responsive bid documents must include a signed, notarized affidavit from the contractor in the form attached. **If the affidavit is not submitted at the time of the bid, the applicant will be disqualified.**

This affidavit must be signed, notarized and submitted with any bid requiring the performance of physical services. If the affidavit is not submitted at the time of the bid, bid will be determined non-responsive and will be disqualified.

3. Contract Language & Contractual Requirements: Affirmative language shall be contained in agreements for the performance of services to cover all statutory and County requirements; such language shall require:

(a) That affidavits in the form attached to these "Procedures & Requirements" be executed from a contractor (and any subcontractors, regardless of tier) and notarized, showing compliance with the requirements of O.C.G.A. § 13-10-91 and that such be made part of the contract and/or subcontracts;

(b) That the contractor (and any subcontractors, regardless of tier) fully comply with the requirements for completing and submitting the "Immigration Compliance Certification" and that such certification be received by the County prior to the commencement of any work under the contract or subcontract;

(c) That the contractor (or any subcontractor, regardless of tier) notify the County within five (5) business days of entering into a contract or other agreement for hire with any subcontractor(s), regardless of tier;

(d) That the contractor be responsible for obtaining and providing to the County the "Subcontractor Affidavit & Agreement" and "Immigration Compliance Certification" attached to and required under these "Procedures & Requirements" from each subcontractor, regardless of tier, employed or retained for work under the contract prior to the commencement of any work under the contract or any subcontract;

(e) That Cobb County, Georgia, reserves the right to dismiss, or require the dismissal of, any contractor or subcontractor for failing to provide the required affidavit or certification and/or for failure to comply with the statutory requirements of O.C.G.A. § 13-10-91 and/or for providing false or misleading information upon the required affidavit(s) or certification(s);

(f) That any contractor and/or subcontractor retaining any other subcontractor to perform services under the contract provide legal notice to any subcontractor of the requirements of Cobb County for immigration compliance and further provide notice that Cobb County, Georgia, reserves the right to dismiss, or require the dismissal of, any contractor or subcontractor for failing to provide the required affidavit or certification and/or for failure to comply with the statutory requirements of O.C.G.A. § 13-10-91 and/or for providing false or misleading information upon the required affidavit(s) or certification(s);

(g) That failure to comply with any of the requirements and procedures of the County (i.e., failure to timely supply required affidavits or compliance certification documents; failure to utilize federal work authorization procedures; failure to

permit or facilitate audits or reviews of records by County or State officials upon request; and/or failure to continue to meet any of the statutory or County obligations during the life of the contract) shall constitute a material breach of the agreement and shall entitle the County to dismiss any general contractor or to require the dismissal of any subcontractor or sub/subcontractor (irrespective of tier) for failing to fully comply with these requirements;

(h) That upon notice of a material breach of these provisions, the contractor (or subcontractor, regardless of tier) shall be entitled to cure the breach within ten (10) days and provide evidence of such cure. Should the breach not be cured, the County shall be entitled to all available remedies, including termination of the contract, the requirement that a subcontractor be dismissed from performing work under the contract, and any and all damages permissible by law.

4. Immigration Compliance Certification: Prior to commencing work under any contract for the physical performance of services, the contractor shall complete the "IMMIGRATION COMPLIANCE CERTIFICATION" form attached to these "Procedures & Requirements" and submit the same to the County.

Prior to allowing any other subcontractor to perform work under the contract, the contractor shall obtain a completed "IMMIGRATION COMPLIANCE CERTIFICATION" from each subcontractor (regardless of tier) and submit the same to the County.

FORM ATTACHMENTS:

1. CONTRACTOR AFFIDAVIT & AGREEMENT (EXHIBIT A);
2. SUBCONTRACTOR AFFIDAVIT & AGREEMENT (EXHIBIT A-1);
3. IMMIGRATION COMPLIANCE CERTIFICATION (EXHIBIT A-2).

CONTRACTOR AFFIDAVIT & AGREEMENT
(EXHIBIT A)

By executing this affidavit, the undersigned contractor verifies its compliance with O.C.G.A. § 13-10-91, stating affirmatively that the individual, firm or corporation which is contracting with Cobb County, Georgia, has registered with, is authorized to use, and is participating in a federal work authorization program (an electronic verification of work authorization program operated by the U.S. Department of Homeland Security or any equivalent federal work authorization program operated by the U.S. Department of Homeland Security to verify information of newly hired employees, pursuant to the Immigration Reform and Control Act of 1986 (IRCA)). The undersigned contractor further attests that it will continue to use the federal work authorization program throughout the contract period.

The undersigned further agrees that should it employ or contract with any subcontractor(s) or should its subcontractor(s) employ other subcontractor(s) for the physical performance of services pursuant to the contract with Cobb County, Georgia, the contractor or subcontractor will:

(1) Notify the County within five business days of entering into a contract or agreement for hire with any subcontractor(s);

(2) Secure from any subcontractor(s) and/or their subcontractor(s) verification of compliance with O.C.G.A. § 13-10-91 on the attached Subcontractor Affidavit (EXHIBIT A) prior to the commencement of any work under the contract/agreement;

(3) Secure from any subcontractor(s) and/or their subcontractor(s) a completed Immigration Compliance Certification (EXHIBIT C) prior to the commencement of any work under the contract/agreement;

(4) Provide the subcontractor(s) with legal notice that Cobb County, Georgia, reserves the right to dismiss, or require the dismissal of, any contractor or subcontractor for failing to provide the affidavit and/or for failure to comply with the requirements referenced in the affidavit;

(5) Maintain records of such compliance and provide a copy of each such verification to Cobb County, Georgia, at the time the subcontractor(s) is retained to perform such services or upon any request from Cobb County, Georgia; and

(6) Maintain such records for a period of five (5) years.

_____
EEV/Basic Pilot Program User ID Number

_____ _____
BY: Authorized Officer or Agent [Contractor Name] Contractor Business Name

_____ _____
Printed Name Date

SWORN AND SUBSCRIBED BEFORE ME
ON THIS THE ____ DAY OF _____, 201_

_____

Notary Public Commission Expires: _____

<u>This affidavit must be signed, notarized and submitted with any bid requiring the performance of physical services. If the affidavit is not submitted at the time of the bid, bid will be determined non-responsive and will be disqualified.</u>

SUBCONTRACTOR AFFIDAVIT & AGREEMENT
(EXHIBIT A-1)

By executing this affidavit, the undersigned subcontractor verifies its compliance with O.C.G.A. § 13-10-91, stating affirmatively that the individual, firm or corporation which is engaged in the physical performance of services on behalf of Cobb County, Georgia, has registered with, is authorized to use, and is participating in a federal work authorization program (an electronic verification of work authorization program operated by the U.S. Department of Homeland Security or any equivalent federal work authorization program operated by the U.S. Department of Homeland Security to verify information of newly hired employees, pursuant to the Immigration Reform and Control Act of 1986 (IRCA)). The undersigned contractor further attests that it will continue to use the federal work authorization program throughout the contract period.

The undersigned further agrees that should it employ or contract with any subcontractor(s) or should its subcontractor(s) employ other subcontractor(s) for the physical performance of services pursuant to the contract with Cobb County, Georgia, the undersigned subcontractor will:

(1) Notify the County within five business days of entering into a contract or agreement for hire with any subcontractor(s);
(2) Secure from any subcontractor(s) and/or their subcontractor(s) verification of compliance with O.C.G.A. § 13-10-91 on the attached Subcontractor Affidavit. (EXHIBIT B) prior to the commencement of any work under the contract/agreement;
(3) Secure from any subcontractor(s) and/or their subcontractor(s) a completed Immigration Compliance Certification (EXHIBIT C) prior to the commencement of any work under the contract/agreement;
(4) Provide the subcontractor(s) with legal notice that Cobb County, Georgia, reserves the right to dismiss, or require the dismissal of, any contractor or subcontractor for failing to provide the affidavit and/or for failure to comply with the requirements referenced in the affidavit; and
(5) Maintain records of such compliance and provide a copy of each such verification to Cobb County, Georgia, at the time the subcontractor(s) is retained to perform such services or upon any request from Cobb County, Georgia; and
(6) Maintain such records for a period of five (5) years.

_____
EEV/Basic Pilot Program User ID Number

_____ _____
BY: Authorized Officer or Agent Subcontractor Business Name
[Subcontractor Name]

_____ _____
Printed Name Date

SWORN AND SUBSCRIBED BEFORE ME
ON THIS THE ____ DAY OF _____, 201_

_____
Notary Public Commission Expires: _____

IMMIGRATION COMPLIANCE CERTIFICATION
(To be completed by Contractors and all Subcontractors)
(EXHIBIT A-2)

I certify to the Cobb County Board of Commissioners that the following employees will be assigned to:
_____
(Project Name/Description)

_____ _____ _____

_____ _____ _____

_____ _____ _____

I further certify to Cobb County, Georgia the following:

- The E-Verify program was used to verify the employment eligibility of each of the above-listed employees hired after the effective date of our contract to use the program;
- We have not received a Final Non-confirmation response from E-Verify for any of the employees listed.
- If we receive a Final Non-confirmation response from E-Verify for any of the employees listed above, we will immediately terminate that employee's involvement with the project.
- I have confirmed that we have an I-9 on file for every employee listed above and that to the best of my knowledge all the I-9's are accurate.
- To the best of my knowledge and belief, all of the employees on the above list are legally authorized to work in the United States.
- If any other employee is assigned to this Cobb County project, a certification will be provided for said employee prior to the employee commencing work on the project.

To the best of my knowledge and belief, the above certification is true, accurate and complete.

Sworn to by: **Contractor Name & Address:**

_____ _____
Signature of Officer

_____ _____
Printed Name/Title

_____ _____
Date

SWORN AND SUBSCRIBED BEFORE ME
ON THIS THE ____ DAY OF _____, 201_

Notary Public
Commission Expires: _____

Disadvantaged Business Enterprises (DBE): The following provisions should be carefully read to determine applicability to your business.

Cobb County Government encourages the participation of all businesses in offering their services and/or products. The Cobb County Government has the goal to fairly and competitively procure the best product at the most reasonable cost.

A Disadvantaged Business Enterprise (DBE) is generally defined as a Female, Black American, Hispanic American and any other minority owned business. The Federal Government has long had program in place to ensure participation of DBE vendors and suppliers. The State of Georgia has established a similar program whereby DBE firms are defined, certified and made known. This effort is managed by the Georgia Department of Transportation (GDOT). More information can be obtained from GDOT web site:

1. http://www.dot.state.ga.us/eeo-div/index.shtml

The Cobb County Government addresses DBE business participation (frequency and dollar value) in the following ways:

1. Cobb County wishes to identify all DBE participation; both at the contractor and sub-contractor levels in the following ways.

    a. DBE businesses are requested to identify such status at the time they register as a vendor.

    b. DBE businesses are requested to identify themselves at the time they propose to do business. Please complete attached example if applicable and return with bid submittal.

    c. All businesses will receive with each Purchase Order an instruction sheet for use of the furnished *Cobb County Government DBE Participation Report,* **see attached example.** Businesses are requested to complete this report and submit it with each invoice for the time period billed.

2. Cobb County has established a Disadvantaged Business Enterprise Plan in accordance with the regulations of the U.S. Department of Transportation (U. S. Department of Transportation (US DOT), 49 CFR Part 26.) The Cobb County Department of Transportation is the lead agency for implementing the US DOT DBE Program for the County.

The Plan applies only to projects which are clearly indicated by the County.

DISADVANTAGED BUSINESS ENTERPRISE (DBE) IDENTIFICATION FORM

A Disadvantaged Business Enterprise (DBE) is generally defined as a Female, Black American, Hispanic American and any other minority owned business. If your firm is classified as a Disadvantaged Business Enterprise (DBE), please complete this form and submit with bid response or send to:

Cobb County Purchasing Department
1772 County Services Parkway
Marietta, GA 30008
Fax: 770-528-1154
Email: purchasing@cobbcounty.org

Name of Firm: _____

Address: _____

_____

_____

Telephone: _____

Fax: _____

Email: _____

MBE Certification Number: _____

Name of Organization Certification _____

This information is acquired for informational purposes only and will have no bearing on the award unless otherwise stated

Instructions for Completing Disadvantaged Business Enterprise (DBE) Participation Report

All Cobb County Government contractors or vendors are requested to complete a report descriptive of any DBE subcontractor involvement in work for which the government is making payment. If otherwise specified in an RFP or contract, additional reporting forms may be required as well.

The objective of this request is to assist in the identification of Disadvantaged Business Enterprise (DBE) business participation with the Cobb County Government and to quantify that participation.

The Cobb County Government does not administer a DBE Certification Program. The principle certification agency for the State of Georgia is the Georgia Department of Transportation. As a Contractor/Vendor you are not responsible for verification of any DBE Certification information of your subcontractor.

*** Instructions ***

1. Contractor/Vendor is furnished the one-page ***DBE Participation Report*** form with each Cobb County Government-issued Purchase Order.

2. Contractor/Vendor completes this form for each billing period and attaches it to the invoice to then be sent to the Cobb County Government.

3. Upon receipt of a Contractor/Vendor invoice, County staff should simply separate the completed DBE form and transmit to:

Cobb County Purchasing Department,
Attn.: DBE Report

A Disadvantaged Business Enterprise (DBE) is a firm that is under the control of someone in an ownership position (at least 51%) that:

1. Has membership in one or more of the following groups: Female, Black American, Hispanic American, Native American, Subcontinent Asian American and Asian-Pacific America. There may be other groups that may be eligible to be certified as DBE;
2. Is a U.S. citizen or lawfully admitted permanent resident of the U.S.;
3. Has a personal net worth which does not exceed $750,000; and,
4. The business meets the Small Business Administration's size standard for a small business and does not exceed $17.42 million in gross annual receipts;
5. The business is organized as a for-profit business.
6. The business may also be DBE eligible as a certified U.S. Small Business Administration 8(a) program.

Cobb County Government Disadvantaged Business Enterprise Participation Report

→PLEASE keep this blank form to make copies for actual use as needed. Also, please print or type in the form. ←

Submitted by: _____ Period Invoiced: _____

Name of Prime Contractor/Vendor **From/To:**

Cobb County Project Name: _____ Bid or P.O. Number: _____

Cobb County Department or Agency receiving service or product:

_____

Description of Purchased Service/Product:

_____

Full Contracted Amount: $_____

Payment amount requested at this time: $_____

1. Are YOU, the Prime Contractor or Vendor a DBE business?
   YES _____ NO _____

2. Please provide the following information for each subcontractor participating during this reporting period:

Subcontractor Business Name	Type Service or Product Supplied	Subcontractor Business/Contact Tel. Number	Actual Dollar Value of Subcontractor Participation this Reporting Period
			$
			$
			$
			$
			$

Submitted by: _____

Printed Name

Signature of Authorized Representative _____

Date :_____

Title or position: _____

County Departments: Please send this completed form to the Cobb County Purchasing Department, ATTN: DBE Report

COBB COUNTY PROPERTY MANAGEMENT
COBB COUNTY PROPERTY MANAGEMENT
57 WADDELL STREET, MARIETTA, GA 30060-1964

PAYMENT BOND

Bond Number:_____

KNOW ALL MEN BY THESE PRESENTS, that we,_____ as Principal, hereinafter called "**Contractor**", and_____, a corporation duly organized under the laws of the State of_____ listed in the latest issue of U.S. Treasury Circular 570, and registered in State of Georgia, as Surety, hereinafter called "**Surety**", are held and firmly bound unto Cobb County, Georgia, hereinafter called "**Owner**", in the sum of_____ _____(in words), (**$**_____) (in figures), for the payment of which sum, well and truly to be made, the **Contractor** and **Surety** bind themselves, their heirs, executors, administrators, successors and assigns, jointly and severally, firmly by these presents.

WHEREAS, the **Contractor** has entered into a written contract dated_____**, 20**_____ with the **Owner** for performance of _____ in accordance with drawings and/or specifications prepared by or for Cobb County which contract is by reference made a part of this bond by reference as if fully set forth herein, and is hereinafter referred to as the **Contract**.

NOW THEREFORE, THE CONDITION OF THIS OBLIGATION is such that, if **Contractor** shall promptly make payment to all claimants as hereinafter defined, for all labor and material used or reasonably required for use in the performance of the Contract, then this obligation shall be void; otherwise it shall remain in full force and effect, subject, however, to the following conditions:

A. A claimant is defined as an entity having a direct contract with the **Contractor** or with a Subcontractor of the **Contractor** for labor, material, or both, used or reasonably required for use in the performance of the Contract, "labor and material" being construed to include but not limited to that part of water, gas, power, light, heat, oil, gasoline, telephone service or rental of equipment directly applicable to the Contract.

B. The **Contractor** and **Surety** hereby jointly and severally agree with the **Owner** that every claimant as herein defined who has not been paid in full before the expiration of a period of ninety (90) days after the date on which the last of such claimant's work or labor was done or performed, or materials were furnished, may sue on this bond for the use of such claimant, prosecute the suit to final judgment for such sum or sums as may be due claimant, and have execution thereon. The **Owner** shall not be liable for the payment of any judgment costs or expenses of any such suit.

C. No suit or action shall be commenced hereunder by any claimant,

1. Unless claimant, other than one having a direct contract with the **Contractor**, shall have given written notice to any two of the following: the **Contractor**, the **Owner**, or the **Surety** above-named, within ninety (90) days after such claimant did or performed the last of the work of labor, or furnished the last of the materials for which said claim is made, stating with substantial specifics and accuracy the amount claimed and the name of the party to whom the materials were furnished, or for whom the work or labor was done or performed. Such notice shall be served by mailing the same by registered mail or certified mail, postage prepaid, in an envelope addressed to the **Contractor**, **Owner** and/or **Surety**, at the addresses provided in the Contract or in this bond, or served in any manner in which legal process may be served in the state in which the aforesaid project is located, save that such service need not be made by a public officer.

2. After one (1) year from the completion of Contract and the acceptance by **Owner** of the work there under, it being understood, however, that if any limitation embodied in this bond is prohibited by any law controlling the construction hereof such limitation shall be deemed to be amended so as to be equal to the minimum period of limitation permitted by such law.

3. Other than in a state court of competent jurisdiction in and or the county or of the state in which the project, or any part thereof, is situated.

D. The amount of this bond shall be reduced by and to the extent of any payment or payments made in good faith hereunder, inclusive of the payment by **Surety** of mechanics' liens which may be filed on record against said improvement, whether or not claim for the amount of such presented under and against this bond.

E. PROVIDED FURTHER, that the said **Surety**, for value received hereby, stipulates and agrees that no change, extension of time, alteration or addition to the terms of the Contract or to the work to be performed there under or the specifications accompanying the same shall in any way affect its obligation on this bond, and it does hereby waive notice of any such change, extension of time, alteration or addition to the terms of the contract or to the work or to the specifications.

IN WITNESS WHEREOF, this instrument is executed in three (3) counterparts, each one of which shall be deemed an original, this _ day of _____, 20____.

Attest:

By: _____

Attest:

By: _____

_____

Principal/Contractor (SEAL)

Signature

Typed Name

Title

Surety **(SEAL)**

Signature of Attorney-in-Fact

Typed Name of Attorney-in-Fact

(Bond must not be dated prior to date of Agreement)

PERFORMANCE BOND

Bond Number: _____

KNOW ALL MEN BY THESE PRESENTS, that we, the undersigned as Principal, hereinafter called "**Builder**", and _____, a corporation duly organized under the laws of the State of _____, listed in the latest issue of U.S. Treasury Circular 570, and registered in the State of Georgia, as Surety, hereinafter called "**Surety**", are held and firmly bound unto Cobb County, Georgia, hereinafter called "**Owner**", in the sum of _____ _____ (in words), ($ _____)(in figures), for payment of which sum, well and truly to be made, the **Builder** and **Surety** bind themselves, their heirs, executors, administrators, successors and assigns, jointly and severally, firmly by these presents.

WHEREAS, the **Builder** has entered into a written contract dated **_____ _____, 20_____** with **Owner** for the construction of _____ _____ in accordance with drawings and/or specifications prepared by or for Cobb County which contract is made a part of this bond by reference as if set forth herein and is hereinafter referred to as the "**Contract**."

NOW THEREFORE, THE CONDITION OF THIS OBLIGATION is such that, if **Builder** shall promptly and faithfully perform said **Contract**, then this obligation shall be null and void; otherwise it shall remain in full force and effect.

PROVIDED, FURTHER, that **Surety**, for value received, hereby stipulates and agrees that no change, extension of time, alteration or addition to the terms of the Contract or to the work to be performed there under or the specifications accompanying the same shall in any way affect its obligation on this bond, and it does hereby waive notice of any such change, extension of time, alteration or addition to the terms of the Contract or to the work or to the specifications.

Whenever **Builder** shall be, and declared by **Owner** to be in default under the Contract, the **Owner**, having performed **Owner's** obligations there under, the **Surety** may promptly remedy the default, or shall promptly:

1. Complete the **Contract** in accordance with its terms and conditions; or,

2. Obtain a bid or bids for completing the **Contract** in accordance with its terms, and conditions, and upon determination by the **Owner** and the **Surety** jointly of the responsible and responsive bidder, arrange for a contract between such bidder and **Owner**, and make available as work progresses (even though there should be default or a succession of defaults) under the contract or contracts of completion arranged under this paragraph sufficient funds to pay the cost of completion less the balance of the **Contract** price; but not exceeding, including other costs and damages for which the **Surety** may be liable hereunder, the amount set forth in the first paragraph hereof.
   The term "balance of the contract price", as used in this paragraph, shall mean the total amount payable by **Owner** to **Builder** under the **Contract** and any amendments thereto, less the amount paid by **Owner** to **Builder**.

Any suit under this Bond must be instituted before the expiration of two (2) years from the date on which final payment under the **Contract** falls due. Notwithstanding the above, in the event of failure by the Builder to perform its obligations under said contract, the Owner may provide written notice of Builder's default to Surety at its address _____ _____ and Surety shall cause to be paid within ten (10) days of receipt of Owner's notice such amount certified by Owner to be owing from Builder pursuant to the Contract.

No right of action shall accrue on this Bond to or for the use of any person or corporation other than the **Owner** named herein or the heirs, executors, administrators or successors of the **Owner**.

The **Surety** may only cancel this bond by first providing thirty (30) days written notice to **Owner** and Builder. Such cancellation shall not discharge the **Surety** from liability already accrued under this bond prior to the expiration of the thirty (30) day period.

IN WITNESS WHEREOF, this instrument is executed in four (4) counterparts, each one of which shall be deemed an original, this _____ day of _____, 20_____.
Attest:

By: _____

Attest:

By: _____

_____
Principal/Builder (SEAL)

_____
Signature

_____
Typed Name

President _____
Title

_____
Surety (SEAL)

_____
Signature of Attorney-in-Fact

_____
Typed Name of Attorney-in-Fact

Attachment B

SPECIAL TERMS AND CONDITIONS OF THE AMERICAN RECOVERY AND REINVESTMENT ACT OF 2009 (ARRA) AND THE ENERGY EFFICIENCY AND CONSERVATION BLOCK GRANT (EECBG)

PART 1 GENERAL

This Section includes covers the Federal, State, and local provisions and requirements of the American Recovery and Reinvestment Act of 2009 (ARRA) and the Energy Efficiency and Block Grant (EECBG) program that constitute the funding sources for this project.

PART 2 SPECIAL TERMS AND CONDITIONS FOR ARRA and EECBG FUNDED PROJECTS

The following Special Terms and Conditions (ST&C-Bid) are incorporated in this bid and all resulting contracts and work orders. Submittal of a bid constitutes agreement by the Bidder to become familiar with and to comply with all terms and conditions in this section as well as elsewhere in bid and contract documents.

I. Compliance with ARRA and EECBG Funding and Contracting Requirements – General

A. Compliance Requirement by Bidders

This project is funded through an Energy Efficiency and Conservation Block Grant (EECBG) (Grant) provide under the American Recovery and Reinvestment Act of 2009 (ARRA), and is administered by the U.S. Department of Energy (DOE). Collectively, the terms and conditions of the EECBG and ARRA constitute the terms and conditions of the Grant.

1. Bidder Acknowledgement of Compliance

By submitting a bid, the Bidder hereby represents and warrants to and for the benefit of Cobb County and the United States Government that the Bidder agrees to:

- Familiarize themselves with, and comply with, all terms and conditions for ARRA and EECBG funded projects;
- Certify such compliance and provide documentation thereof upon request;
- Pass through these requirements to all subcontractors and, where applicable, to suppliers;
- Provide full and timely assistance upon request to Cobb County and other legal state and federal agencies and their designees as may be requested to demonstrate or confirm compliance with all bid and contract requirements and conditions.

2. Compliance Documents

The following documents specifying terms and conditions required for compliance with ARRA and EECBG are incorporated by reference:

- The American Recovery and Reinvestment Act of 2009
- 10 CFR 600 - all sections applicable to local governments. In particular, pay special attention to conditions in Subpart C – Uniform Administrative Requirements for Grants and Cooperative Agreements to State and Local Governments.
- National Policy Assurances (version current at time of bid publication)

- The "Special Terms and Conditions to Cobb County EECBG Grant DE-EE0000803/000" (Grant ST&C), a copy of which is available online at http://purchasing.cobbcountyga.gov/

Bidders are directed to pay particular attention to the following sections of documents referenced above:

- 10 CFR 600-236, Purchasing, with special attention to paragraph (i)
- Grant ST&C paragraph 25 – compliance with Buy American requirements of ARRA
- Grant ST&C paragraph 27 and 29 – compliance with Davis-Bacon requirements of ARRA
- Grant ST&C paragraph 22 – special provisions for ARRA funded work

B. Bidder Acknowledgement Regarding Compliance Failure

In addition to all other remedies available to the Owner in the Bid and Contract documents, Bidder acknowledges that failure to comply with all terms and conditions in the ARRA and EECBG may constitute justification for with holding payment for services and materials up to and including the full value of any project funds with held by the government of the United States.

C. Flow down Requirement

Bidders must include all terms and conditions of this bid and all associated contracts in all subcontracts or awards resulting from this Bid as required by the referenced

D. Jobs Creation Reporting

Bidder agrees to provide information as requested by Owner to fulfill Owner's responsibility to report jobs created with Grant funds.

E. Compliance with NEPA and Cobb County Waste Stream Management Plan

Cobb County has submitted a Waste Stream Management Plan to DOE as a condition of the EECBG. A copy of this plan is posted at http://purchasing.cobbcountyga.gov/. In addition to any other requirements contained or referenced in documents listed in section III-A herein, Bidder, by submitting a bid, indicates their familiarity with Cobb County's Waste Stream Management Plan and agrees to adhere to the processes and procedures therein, and to provide documentation acceptable to the Owner of compliance.

II. Guidance and Emphasis Regarding ARRA and EECBG Funding and Contracting Requirements

Section I to these bid Special Terms and Conditions incorporates by reference the compliance requirements for this Bid and all subsequent contracts as required by the ARRA and EECBG grant conditions. The following discussion of selected compliance requirements is provided for emphasis, or for clarification or guidance on selected requirements. Should there be any conflict between these clarifications and the requirements of the source documents, the requirements of the source documents shall be applicable.

A. Access and Maintenance of Records

Bidder agrees that the terms Owner, County, or similar, as used in respect with requests made for records or documents necessary to ensure compliance with the ARRA and EECBG, shall include representatives of DOE, the US Inspector General, the US Comptroller General, their designees, or any other federal or state agencies and officials lawfully charged with ensuring compliance with the terms of this grant.

Bidder agrees to respond to all such requests fully and in a timely manner so as not to delay Owner's obligations for this grant.

Included in this obligation is compliance with the following grant conditions:

1. Information in Support of Recovery Act Reporting

Recipient may be required to submit backup documentation for expenditures of funds under the Recovery Act including such items as timecards and invoices. Recipient shall provide copies of backup documentation upon request by Owner.

2. Access to Records

With respect to funds made available as a result of this Bid, any representative of the Owner as defined herein is authorized:

(1) to examine any records of the contractor or grantee, any of its subcontractors or sub grantees, or any State or local agency administering such contract that pertain to, and involve transactions that relate to, the subcontract, subcontract, grant, or sub grant; and

(2) to interview any officer or employee of the contractor, grantee, sub grantee, or agency regarding such transactions.

3. Maintenance of Records

All records required for compliance with the expenditure of funds made available by the American Recovery and Reinvestment Act of 2009 shall be maintained and available for access as required for a minimum of three (3) years from date of final payment for work under this Contract and all other pending matters are closed, or longer should any of the applicable documents referenced in section III A above so require.

B. Contractor Registrations and Certification of Eligibility

Bidders acknowledge by submitting a bid that:

1. Registration in the Central Contractor Registration (CCR) and acceptance by the DOE of their status is a requirement for any contract award. Bidders must submit a current DUNS number with their bid, as well as either: (a) a current CCR registration number, or (b) in the absence of a CCR number, a certification that they will register in CCR in a timely manner upon Owner notification of intent to award, and that award may be withheld for failure to register or should they be rejected for work by any federal agency with authority to deny eligibility.

2. Neither the Contractor (nor he or she) nor any person or firm who has an interest in the contractor's firm is a person or firm ineligible to be awarded Government contracts by virtue of Section 3(a) of the Davis-Bacon Act or 29 CFR 5.12(a)(1) or to be awarded DOE contracts or participate in DOE programs pursuant to 24 CFR Part 24; and

No part of this bid shall be subcontracted to any person or firm ineligible for award of a Government contract by virtue of Section 3(a) of the Davis-Bacon Act or 29 CFR 5.12(a)(1) or to be awarded DOE contracts or participate in DOE programs pursuant to 24 CFR Part 24.

C. Buy American – ARRA Section 1605

All goods and services to be provided through this Bid are being funded with monies made available by ARRA and such law contains provisions commonly known as "Buy American Requirements" that requires all of the iron, steel, and manufactured goods used in the project be produced in the United States unless a waiver of the requirements is approved by the Department of Energy.
It is the responsibility of the Bidder to ensure the following: (a) full reviewed and understanding of the Buy American Requirements, (b) that all of the iron, steel, and manufactured goods used in the project will be and/or have been produced in the United States in a manner that complies with the Buy American Requirements, (c) that should Bidder anticipate and propose any non-compliant iron, steel, and manufactured goods, Bidder must note specific exceptions in their bid and provide reference to an existing DOE waiver if any, or justification as required in ARRA Section 1605 to apply for a waiver, and (d) the Contractor will provide any further verified information, certification or assurance of compliance with this paragraph, or, if applicable, assistance in submitting a Bidder requested waiver from this requirement as may be requested by Cobb County or other legal state or federal agency.

Bidders shall complete and submit the Owner provided Contractor and Supplier Certification Document(s) for themselves, and shall obtain and submit the same from any subcontractors and suppliers, in a timely manner upon request by the Owner. **(See Attachment B-1 to this section).**

Notwithstanding the waiver provisions allowed in the ARRA, a Bidder request for exceptions to Buy American Requirements shall be sufficient for Cobb County, at its sole discretion, to reject a bid as non-responsive.

D. Davis-Bacon Act and Contract Work Hours and Safety Standards Act

Compliance with the Davis-Bacon Act, the Contract Work Hours and Safety Standards Act, and the Copeland Act, all as stipulated in the Compliance Documents in section III-A herein, apply to this project.

Under the provisions of the Act, contractors or their subcontractors are to pay workers employed directly upon the site of the work no less than the locally prevailing wages and fringe benefits paid on projects of a similar character as determined by the U.S. Dept. of Labor Wage Determination applicable on the bid issuance date for the construction type and work location. **For this project, General Decision Number: GA100255 7/9/2010 GA255, is applicable. The applicable wage rates are included in this bid as Attachment B-2.**

By submitting a bid, the Bidder hereby represents and warrants to and for the benefit of Cobb County and the United States Government that (a) the contractor has reviewed and understands the requirements of the Davis-Bacon Act, the Contract Work Hours and Safety Standards Act, and the Copeland Act as they apply hereto, (b) has reviewed the applicable Wage Determination referenced herein, and (c) will fully conform with the applicable Wage Determination and all requirements applicable to this bid and resulting contract(s).

E. Protecting State and Local Government and Contractor Whistleblowers.

The requirements of Section 1553 of the ARRA specify protections, actions and remedies regarding treatment of any employee of state or local governments or their contractors or subcontractors for disclosing, including a disclosure made in the ordinary course of an employee's duties, information that the employee believes is evidence of gross management of an agency contract or grant relating to covered funds, a gross waste of covered funds, a substantial and specific danger to public health or safety related to the implementation or use of covered funds, an abuse of authority related to the implementation or use of covered funds, or violation of law, rule, or regulation related to an agency contract (including the competition for or negotiation of a contract) or grant, awarded or issued relating to covered funds.

All parties to this agreement shall be responsible for compliance with all requirements and conditions of Section 1553 of the ARRA.

Requirement to Post Notice of Rights and Remedies: Any employer receiving covered funds under the American Recovery and Reinvestment Act of 2009, Pub. L. 111-5, shall post notice of the rights and remedies as required therein. (Refer to section 1553 of the American Recovery and Reinvestment Act of 2009, Pub. L. 111-5, www.Recovery.gov, for specific requirements of this section and prescribed language for the notices.).

G. False Claims Act

Recipient and sub-recipients shall promptly refer to the DOE or other appropriate Inspector General any credible evidence that a principal, employee, agent, contractor, sub-grantee, subcontractor or other person has submitted a false claim under the False Claims Act or has committed a criminal or civil violation of laws pertaining to fraud, conflict of interest, bribery, gratuity or similar misconduct involving those funds.

H. National Policy Assurances

National Policy Assurances in effect on date of award as published at http://management.energy.gov/business_doe/1374.htm are incorporated in these Special Terms and Conditions by reference.

I. Small and Minority Business Enterprises

The Bidder agrees to ensure that small and minority firms, women's business enterprises, and labor surplus firms (DBE firms) have the maximum opportunity to participate in the performance of contracts and subcontracts whenever possible per paragraph (e) of 10 CFR 600-236. In this regard, all contractors shall take necessary and reasonable steps in accordance with 10 CFR 600-236 to ensure these firms have the maximum opportunity to compete for and perform contracts. Contractors shall not discriminate on the basis of race, color, national origin or sex.

Bidder agrees to provide documentation of all DBE firms, including itself, participating in this contract. Bidder further agrees, upon request of the Owner, to provide a list of any DBE firms that were contacted for participation in this contract.

END OF SECTION

Attachment B-1

Page 1

Manufacturer's Buy American Certification Compliance Statement

The Manufacturer (or designated manufacturer's representative) shall include this statement with all submittals for this project.

By this submittal, the Manufacturer hereby represents and warrants that all iron, steel, or manufactured goods represented in this submittal will be and/or have been produced in the United States in a manner that complies with the Buy American Requirements of Section 1605 of the American Recovery and Reinvestment Act of 2009 (ARRA), unless a waiver of the requirements is approved, and the Manufacturer will provide any further verified information, certification or assurance of compliance with this paragraph, or information necessary to support reporting requirements or a waiver of the Buy American Requirements, as may be requested by the Owner.

Project Name:_____

Signed:_____

By:_____

Print Name

Title:_____

Company:_____

Date:_____

Contractor Buy American Certification Compliance Statement

The Contractor shall execute and submit this statement prior to contract award for this project.

I understand this project is funded in whole or in part using funds provided through the American Recovery and Reinvestment Act of 2009 (ARRA), and that performance on this project requires full compliance with the conditions of this Act.

I hereby represent and warrant that all iron, steel, or manufactured goods used in this project will be and/or have been produced in the United States in a manner that complies with the Buy American Requirements of Section 1605 of the American Recovery and Reinvestment Act of 2009 (ARRA), unless a waiver of the requirements is approved, and I will provide any further verified information, certification or assurance of compliance with this paragraph, or information necessary to support reporting requirements or a waiver of the Buy American Requirements, as may be requested by the Owner.

I agree to require the Manufacturer of all products used on this project submit a Manufacturer's Buy American Certification with all product submittals unless a waiver of the requirements is approved.

I shall maintain records at the job site or, if no contractor office is maintained at the job site, at the project office of the supervisor overseeing this project, documenting of compliance with these requirements, to provide copies of such documents available to the Owner upon request, and to provide complete documentation to the Owner at the conclusion of the project.

Project Name:_____

Signed:_____

By:_____

Print Name

Title:_____

Company:_____

Date:_____

Attachment B-2

General Decision Number: GA100255 07/09/2010 GA255

Superseded General Decision Number: GA20080255

State: Georgia

Construction Type: Building

County: Cobb County in Georgia.

BUILDING CONSTRUCTION PROJECTS (does not include single family homes or apartments up to and including 4 stories).

Modification Number	Publication Date
0	03/12/2010
1	03/19/2010
2	04/02/2010
3	05/28/2010
4	07/09/2010

ASBE0048-001 04/01/2010

	Rates	Fringes
ASBESTOS WORKER/HEAT & FROST INSULATOR	$ 25.07	12.41

CARP0225-003 07/01/2008

	Rates	Fringes
CARPENTER (including form work; excluding drywall hanging and acoustical ceiling installation)	$ 21.45	6.35

CARP1263-001 07/01/2009

	Rates	Fringes
MILLWRIGHT	$ 22.42	11.95

ELEC0613-014 03/01/2010

	Rates	Fringes
ELECTRICIAN (including installation of temperature controls for HVAC Systems)	$ 29.00	8.09

FOOTNOTES: Work on bar joists, walk logs, exposed steel and swinging scaffolds when the surface the worker stands or sits on exceeds twenty-five (25) feet above solid floor and the worker is subject to free fall: $1.00 per hour additional. Work of a similar nature above fifty (50) feet: $3.00 per hour additional.

Attachment B-2

ELEV0032-001 01/01/2010

	Rates	Fringes
ELEVATOR MECHANIC	$ 33.98	20.035+a+b

PAID HOLIDAYS:

a. New Year's Day, Memorial Day, Independence Day, Labor Day, Vetern's Day, Thanksgiving Day, the Friday after Thanksgiving, and Christmas Day.

b. Employer contributes 8% of regular hourly rate to vacation pay credit for employee who has worked in business more than 5 years; 6% for less than 5 years' service.

ENGI0926-027 07/01/2009

	Rates	Fringes
Operating Engineers:		
Backhoe/Excavator, Hoist and Mechanic	$ 23.74	9.03
Bulldozer, Compactor, Drill, Forklift, Loader, and Scraper	$ 23.43	9.03
Crane and Boom	$ 27.38	9.03
Oiler	$ 20.21	9.03

FOOTNOTE: Paid Holidays - Labor Day and Christmas Day, if the worker has one year of continuous employment with the same contractor.

IRON0387-001 08/01/2009

	Rates	Fringes
IRONWORKER, STRUCTURAL	$ 24.04	9.86

---

* PAIN0193-008 07/01/2010

	Rates	Fringes
DRYWALL FINISHER/TAPER	$ 20.37	8.30

---

* PAIN0193-011 07/01/2010

	Rates	Fringes
PAINTER: Brush, Roller and Spray	$ 20.37	8.30

PAIN1940-001 10/01/2009

	Rates	Fringes

GLAZIER.....$ 21.00 7.05

FOOTNOTE: Paid holidays: Thanksgiving Day, Christmas Day, New Year's Day, National Memorial Day, July 4th and Labor Day; if the employee works the day before and the day after the holiday.

PLUM0072-012 08/01/2009

	Rates	Fringes
PIPEFITTER, Including HVAC Pipe Installation.....	$ 28.90	12.31
PLUMBER (Excluding HVAC Pipe Installation).....	$ 28.90	12.31

SFGA0669-001 01/01/2010

	Rates	Fringes
SPRINKLER FITTER (Fire Sprinklers).....	$ 25.55	14.60

SHEE0085-001 08/01/2008

	Rates	Fringes
SHEET METAL WORKER, Including Hvac Duct Installation and Metal Roofing		
Buildings over 100,000 square feet.....	$ 28.00	11.11
Buildings up to 100,000 square feet.....	$ 22.40	10.95

FOOTNOTE: Work on swinging stages, boatswains chairs or scaffolds, booms, or scissors lifts over 50 ft. high: $1.25 per hour additional.

SUGA2008-167 08/21/2008

	Rates	Fringes
ACOUSTICAL CEILING MECHANIC.....	$ 14.00	0.00
BRICKLAYER.....	$ 16.00	0.00
CARPENTER (Drywall Hanging Only).....	$ 15.05	0.82
CEMENT MASON/CONCRETE FINISHER...	$ 12.94	0.00
HVAC MECHANIC: System Installer (Excluding HVAC Duct and Pipe Installation).....	$ 16.26	1.26
IRONWORKER, REINFORCING.....	$ 11.05	0.21

LABORER: Common or General	$ 10.90	1.44
LABORER: Pipelayer	$ 13.06	3.56
OPERATOR: Grader/Blade	$ 9.00	0.24
OPERATOR: Roller	$ 10.88	0.00
ROOFER (Excluding Metal Roof)	$ 10.00	0.00
TILE SETTER	$ 15.00	0.00
TRUCK DRIVER	$ 12.27	1.56
WATERPROOFER	$ 10.50	0.00

WELDERS - Receive rate prescribed for craft performing operation to which welding is incidental.

==========

Unlisted classifications needed for work not included within the scope of the classifications listed may be added after award only as provided in the labor standards contract clauses (29 CFR 5.5(a)(1)(ii)).

In the listing above, the "SU" designation means that rates listed under the identifier do not reflect collectively bargained wage and fringe benefit rates. Other designations indicate unions whose rates have been determined to be prevailing.

WAGE DETERMINATION APPEALS PROCESS

1.) Has there been an initial decision in he matter? This can be:

* an existing published wage determination
* a survey underlying a wage determination
* a Wage and Hour Division letter setting forth a position on a wage determination matter
* a conformance (additional classification and rate) ruling

On survey related matters, initial contact, including requests for summaries

of surveys, should be with the Wage and Hour Regional Office for the area in which the survey was conducted because those Regional Offices have responsibility for the Davis-Bacon survey program. If the response from this initial contact is not satisfactory, then the process described in 2.) and 3.) should be followed.

With regard to any other matter not yet ripe for the formal process described here, initial contact should be with the Branch of Construction Wage Determinations. Write to:

Branch of Construction Wage Determinations
Wage and Hour Division
U.S. Department of Labor
200 Constitution Avenue, N.W.
Washington, DC 20210

2.) If the answer to the question in 1.) is yes, then an interested party (those affected by the action) can request review and reconsideration from the Wage and Hour Administrator (See 29 CFR Part 1.8 and 29 CFR Part 7). Write to:

Wage and Hour Administrator
U.S. Department of Labor
200 Constitution Avenue, N.W.
Washington, DC 20210

The request should be accompanied by a full statement of the interested party's position and by any information (wage payment data, project description, area practice material, etc.) that the requestor considers relevant to the issue.

3.) If the decision of the Administrator is not favorable, an interested party may appeal directly to the Administrative Review Board (formerly the Wage Appeals Board). Write to:

Administrative Review Board
U.S. Department of Labor
200 Constitution Avenue, N.W.
Washington, DC 20210

4.) All decisions by the Administrative Review Board are final.

END OF GENERAL DECISION

BID FORM
Page 1 of 3

TO: COBB COUNTY BOARD OF COMMISSIONERS

THE UNDERSIGNED, having examined the project documents titled:

HVAC SYSTEM IMPROVEMENTS PROJECT
COBB COUNTY ADMINISTRATIVE BUILDING
10 EAST PARK SQUARE
MARIETTA, GEORGIA 30060
Sealed Bid #10-5519

AND having visited the work site(s) and examined the conditions affecting the Work, HEREBY proposes and agrees to furnish all labor and materials, equipment, and appliances and to perform all operations necessary TO COMPLETE ALL WORK FOR ALL SERVICES AS REQUIRED BY THE PROJECT MANUAL, INCLUDING ANY ADDENDA, FOR THE SUMS STIPULATED BELOW.

BOILER, CHILLER, PUMPS, AHU MOTOR REPLACEMENT, VFDS, AND CONTROLS-BASE BID AMOUNT

_____DOLLARS ($_____)

BID ALTERNATE #1 AMOUNT
REPLACE CHILLER WITH FRICTIONLESS CHILLER

_____DOLLARS ($_____)

The undersigned understands and agrees also to comply with and be bound by the entire contents of the Request for Bid including all Addenda.

Acknowledged:_____

The undersigned acknowledges receipt of Addenda numbers:

ADDENDUM NO.	_____	Acknowledged:	_____
ADDENDUM NO.	_____	Acknowledged:	_____
ADDENDUM NO.	_____	Acknowledged:	_____
ADDENDUM NO.	_____	Acknowledged:	_____
ADDENDUM NO.	_____	Acknowledged:	_____
ADDENDUM NO.	_____	Acknowledged:	_____

CONTRACTOR'S QUALIFICATION STATEMENT

I. CONTRACTOR

Name of Contractor: _____

Address of Contractor: _____

Primary Contact Person: _____

Telephone Number: _____

Type of Business Entity: _____
(corporation, sole proprietorship, partnership, p.c.)

Contractor does _____ or does not _____ anticipate using subcontractor(s) in the performance of this Work.

Contractor Business Entity Principals:

Primary Owners (if other than C-Corporation): _____

_____

_____

President: _____

Secretary: _____

Business is organized under the Laws of the State of _____

Business Qualifies as a Woman Owned, Small Business, or DBE (Y/N): _____

If yes, list certifying authority: _____

II. BANK REFERENCE

Primary Bank: _____

Relationship officer
responsible for account: _____

Telephone Number: _____

III. REGISTRATION AS FEDERAL CONTRACTOR

Registration with DUNS is required for submittal of a Bid. Registry with the CCR and provision
of a CAGE number is required prior to contracting.

Bidder DUNS Number:_____ Bidder CAGE Number: _____

If not currently registered and active with CCR, the undersigned hereby certifies they will register in a timely manner and provide Cobb County with their CCR CAGE number upon notification of intent to award work under this Bid. Initialed:_____

IV. BACKGROUND

Has Contractor ever done business under a different name? _____

If so, provide names: _____

Prior projects with Cobb County:_____

_____

_____

IV. REFERENCES

Contractor shall provide references separately as required in RFP documents.

V. COMPLIANCE DOCUMENTS

The undersigned hereby certifies the following bid submittals are included with this Bid Form. Failure to submit required submittals listed here may be used to reject the Contractor's Bid:

- Georgia Immigration Act Compliance Contractor Affidavit and Agreement
- Conflict of Interest Statement
- Officer's Oath
- Bid Pricing Form

BIDDER SIGNATURES

Bid dated this _____day of _____2010

Bidder: _____

Signed: _____

Title: _____

Address: _____

_____

END OF BID FORM

"SAMPLE" CONTRACT Date:

OWNER: COBB COUNTY BOARD OF COMMISSIONERS ("Owner")
COBB COUNTY, GEORGIA
c/o Property Management Department
57 Waddell Street
Marietta, Georgia 30060-1940

CONTRACTOR:
("Contractor")

WORK: HVAC Improvements – Cobb County Administration Building ("Work")
(General caption only)

PROJECT: **FEDERAL ENERGY GRANT – HVAC IMPROVEMENTS – COBB COUNTY ADMINISTRATION BUILDING**

("Project")

ARCHITECT-ENGINEER: Lilly Young & Associates, Inc. ("Engineer")

CONTRACT PRICE: ("Price")

MONTHLY BILLING DATE: To be received at the ("Monthly Billing Date")
Cobb County Property Management office by the 25th of each month.

RETAINED PERCENTAGE:10% ("Retained Percentage")

CHANGE ORDER COMBINED OVERHEAD AND PROFIT: ("Profit Percentage")
Combined Fifteen (15%) Percent

PAYMENT AND PERFORMANCE BONDS: Required__XX__Not Required___

The above terms are incorporated by reference and are more fully explained below.)
Cobb County Board of Commissioners Owner, and Contractor, with offices at the addresses shown above, agrees for themselves, their successors, and assigns as follows:

1. WORK: Contractor shall perform and furnish all labor, supervision, services, materials, equipment, tools, scaffolds, hoisting, transportation, storage and all other things necessary to prosecute and complete the work identified and described in, or

which can be reasonably inferred from, Schedule A attached hereto (the "Work"). Contractor shall perform the Work in a good and workmanlike manner strictly in accordance with the Contract Documents, consisting of the plans, specifications (including, but not limited to, general, special, and supplemental conditions), addenda, and other documents identified in Schedule B attached hereto, and all subsequently and duly issued modifications thereto.

Contractor represents and agrees that it has carefully examined and understands the Contract Documents relevant to the Work; has adequately investigated the nature and conditions of the project site and locality; has familiarized itself with conditions affecting the difficulty of the Work and the condition of any equipment to be maintained and/or repaired; and has entered into this Contract based on its own examination, investigation and evaluation. Contractor is not in reliance upon any opinions or representations of Owner.

2. PRICE: Owner shall pay to Contractor for the satisfactory performance and completion of the Work and performance of all the duties, obligations and responsibilities of Contractor under this Contract, the sum set forth herein as the Price, subject only to additions and deductions as expressly provided in this Contract. To the extent that the Work is to be performed on a unit price basis, the Price shall be computed in accordance with the unit prices set forth in Schedule C, based on actual quantities determined in accordance with the Contract Documents and this Contract. The Price and all unit prices shown in Schedule C shall be deemed to include all costs of Contractor's performance of the Work as set forth in the Contract Documents, including, but not limited to, the costs of labor, supervision, services, materials, equipment, replacement parts/equipment, tools, scaffolds, hoisting, transportation, storage, insurance and taxes, and all overhead and profit.

3. PROGRESS PAYMENTS: Within ten (10) days after the date of transmission of this Contract to Contractor, Contractor shall submit to Owner for Owner's approval a detailed schedule showing a proper cost breakdown (with a proper share of associated overhead and profit) of the Price according to the various line items or parts, of the Work, for use only as a basis for verifying Contractor's applications for payment.

The Contractor shall submit an Application for Payment on the 25th of each month. The Contractor will provide, with the Payment Application, a line item breakdown of all previous costs to date plus the amount for application. The Owner will make payments to the Contractor within a reasonable period of time after receipt of the Payment Application equal to the value of the Completed Work and Stored Work as of the corresponding Monthly Billing Date, to the extent approved by Owner and Architect, and after deducting (a) all previous payments, (b) current retainage (to a maximum of 10 percent of each progress payment; provided, however, that, when 50 percent of the contract value including change orders and other additions to the Contract value provided for by the Contract Documents is due and the manner of completion of the Contract Work and its progress are reasonably satisfactory to the Owner's authorized Contract Representative, the Owner shall withhold no more retainage. If, after discontinuing the retention, the Owner's authorized Contract Representative determines that the Work is unsatisfactory or has fallen behind schedule, retention may be resumed at the previous level.), (c) all charges or back charges for services, materials, equipment, or other items furnished or otherwise chargeable to Contractor, and (d) withheld payments if the Owner determines there is unsatisfactory job progress, defective work, disputed work, actual or potential third party claims. Alternatively, any failure to make timely payments for labor or materials, damage to other entities connected with the project or reasonable evidence that the contract cannot be completed for the balance of the contract price. Payments that are not unreasonably delayed will bear no interest penalties.

The terms of this paragraph and the entire Contract Documents are intended to supersede all provisions of the Prompt Pay Act, O.C.G.A. 13-11-1 through 13-11-11.

Owner reserves the right to advance the date of any payment (including final payment) due or to become due under this Contract if, in its sole judgment, it becomes desirable to do so. The Owner shall not thereby incur any obligation to do so in the future or waive his right to strict compliance with the Contract terms.

Contractor shall not be entitled to any payment until this Contract has been properly executed and all documents and information to be furnished by Contractor have been supplied to Owner. If Owner has a dispute over a portion of the invoices, the undisputed portion will be paid.

4. FINAL RETAINAGE PAYMENT: At substantial completion of the Work and as the Owner's authorized Contract Representative determines the Work to be reasonably satisfactory, the Owner shall within 30 days after the last of the following to occur: (a) delivery of a final application for payment, (b) furnishing of evidence satisfactory to Owner that there are no

claims, obligations, or liens outstanding or unsatisfied for labor, services, materials, equipment, taxes, or other items performed, furnished or incurred in connection with the Work, (c) delivery of all guaranties, warranties, bonds, instruction manuals, performance charts, diagrams, as-built drawings and similar items required of Contractor or its suppliers or subcontractors and (d) delivery of a general release, in a form satisfactory to Owner, executed by Contractor running to and in favor of Owner, and such other parties as Owner may require; pay the retainage to the Contractor. If at that time there are any remaining incomplete minor items, an amount equal to 200 percent of the value of each item as determined by the Owner's authorized Contract Representative shall be withheld until such item or items are completed to the Owner's satisfaction.

5. PAYMENT CONDITIONS: Contractor will receive the payments made by Owner and Contractor will hold such payments as a trust fund to be applied first to the payment of laborers, suppliers, subcontractors, and others responsible for the Work for which such payments are made, including sufficient funds so that all taxes and insurance applicable thereto are also paid and shall comply with all laws applicable thereto.

Contractor shall, as often as requested by Owner, furnish such information, evidence and substantiation as Owner may require with respect to the extent and value of current progress and the nature and extent of all obligations incurred by Contractor in connection with the Work and all payments made by Contractor on account thereof. Contractor shall also furnish, as required by Owner in its sole discretion, such partial or final lien waivers or releases, as Owner deems necessary to ensure that Contractor has paid all persons furnishing any labor, material, or services in furtherance of any Work furnished hereunder. If required by Owner, the furnishing of such lien waivers and releases shall be a condition precedent to any payment hereunder. Nothing herein shall constitute any requirement that Owner exercise its discretionary option to require such releases and waivers. Moreover, no prior failure of Owner to require such releases and waivers shall limit Owner's right to require them subsequently.

Owner reserves the right to withhold, as a reserve and without limiting its other rights and remedies, an amount sufficient: (a) to defend, satisfy and discharge any asserted claim that Contractor (or anyone providing any of the Work hereunder) has failed to make payment for labor, services, materials, equipment, taxes, or other items or obligations furnished or incurred in connection with the Work. Or has caused damage to the Work or to any other work on the Project; (b) to complete the Work if it appears that funds remaining in the Contract, including retainage and exclusive of back charges, are insufficient to complete the Work; (c) to reimburse Owner for any back charges incurred as a result of any act or omission by Contractor hereunder; (d) to protect Owner from the possible consequences of any other breach or default by Contractor hereunder; or (e) to secure Owner with respect to any breach or default by Contractor or its affiliates, parent company and subsidiaries under any other agreement. Payment hereunder shall not be evidence of the proper performance or progress of the Work and no payment shall be construed to be acceptance of defective, faulty, or improper work or materials.

6. TIME: Time is of the essence. Therefore, Contractor shall: (a) submit, with its proposed schedule, information showing the time required to prepare and approve shop drawings, to fabricate and deliver materials and equipment, and to install the Work; (b) order (for manufacture or purchase and delivery) all materials required for performance of the Work as soon as possible in order to avoid delays caused by strikes;, transportation or unavailability; (c) furnish Owner within thirty (30) days a list of major materials and equipment required for the Work, showing the name, address and telephone number of the supplier and the date on which such material and equipment is expected to be delivered to the Project site; (d) furnish Owner, upon issuance, a copy of each major purchase order and subcontract (with price information deleted); (e) cause a qualified home office supervisory representative (while Contractor has forces at the Project site and for two weeks prior thereto) to attend weekly progress meetings; and (f) notify Owner immediately by telephone and confirm in writing within ninety-six (96) hours. If the Contractor finds that, any item cannot be delivered as required to maintain Owner's progress schedule. Contractor also agrees to be bound by such modifications to the Project schedule as are discussed at the weekly job progress meetings and are contained in the minutes of those meetings unless written objection is made by Contractor within seventy-two (72) hours of the occurrence of such meeting.

7. EXTENSIONS OF TIME: Should Contractor, without any fault or neglect on its own part, be delayed in the completion of the Work by the fault or neglect of Owner, Contractor, as its sole remedy, shall be entitled to a reasonable extension of time only. Should Contractor, without any fault or neglect on its own part, be delayed in the completion of the Work by an act of God or such other cause beyond the control of the Contractor, Contractor shall be entitled to a reasonable extension of time to be determined in accordance with this Contract and the Contract Documents. In no event shall Contractor be entitled to compensation or damages for any delay in the commencement, prosecution, or completion of the Work or for any

schedule adjustments resulting therefrom.

Notwithstanding anything, to the contrary in the Contract Documents or this Contract, Contractor shall not be entitled to an extension of time unless a written notice of delay shall have been delivered to Owner within ninety-six (96) hours after commencement of the claimed delay.

8. CHANGE ORDERS: Without notice to any surety and without invalidating this Contract, Owner may from time to time, solicit an offer by written order to Contractor to make changes in the Work under the Contract Documents.

Upon request of Owner, and in a timely manner, Contractor shall submit a written offer and proposal for any applicable Price and time adjustment attributable to the changed Work, detailed as Owner may require, supported, and conforming to the requirements of the Contract Documents.

Where a change is issued pursuant to a change required by the Owner, the Price shall be adjusted by the net amount of any direct savings and direct cost plus Profit Percentage, attributable to the Change Order, and the time for performance of the Work may be adjusted according to the Contract Documents, subject, however, in each case to the following limitations: (a) where the Work affected by Change Order is the subject of unit prices under Exhibit C, the Price adjustment shall be limited to the amounts obtained by applying such unit prices to the actual increase or decrease in the quantity of units due to the change, and (b) the amount allowable for all overhead and profit shall be limited to the product obtained by multiplying the Profit Percentage by the net amount of the Contractor's direct savings and direct cost.

As used in this contract, Contractor's direct savings and direct cost shall mean and be limited to the actual amount of the following: cost of materials, including sales tax and cost of delivery; cost of labor, including social security, old age and unemployment insurance, and fringe benefits required by agreement or custom; worker's compensation insurance; bond premiums if and to the extent actually increased; and actual rent not greater than the rent charged in the locale, or reasonable value of Contractor-owned equipment and machinery.

If the parties are able to agree upon the amount of the Price adjustment and the extent of any time adjustment, such adjustment shall be set forth and memorialized in a Change Order, which shall be accepted by Contractor. If the parties are unable to agree upon such adjustments, Owner may elect to issue the Change Order to Contractor directing such work to be performed by Contractor, and any adjustments to Price or time shall be subject to ultimate determination in accordance with this contract; and Contractor shall, nonetheless, proceed immediately with the changed Work. Contractor shall keep a detailed account of the direct savings and direct cost due to the changed Work separately from its other accounting records and shall make such records available to the Owner at Owner's request. Failure to keep adequate and separate cost records of the changed Work, and to furnish same to Owner upon its request, shall constitute an acceptance on Contractor's part of the Owner's determination of the direct savings and direct cost of such changed Work. In no event shall Contractor proceed with changed Work without a Change Order issued pursuant to this paragraph 8 and Owner shall not be liable for any additional costs incurred or delays encountered in the performance of such changed Work without such a written Change Order.

9. NOTICES: All Written notices provided for in this contract or in the Contract Documents shall be deemed given if delivered personally to a responsible representative of the party, sent by telegram, fax with fax acknowledgment, or by regular mail to the party at its address specified herein. Either party may from time to time, by notice to the other as herein provided, designate a different address to which notices to it should be sent.

10. BONDS: If so indicated on page 1 hereof, Contractor shall furnish, within ten (10) days of date of transmission of this contract to Contractor, which is included in the Price, a performance bond and a payment bond, each in an amount equal to the Price, on standard AIA A311 forms and Contractor agrees to notify its surety or sureties of increases in the Price and to take such action as is required to have the penal amount of the bonds furnished pursuant to this paragraph increased correspondingly.

11. INSURANCE: Contractors shall procure and maintain for the duration of the contract, insurance against claims for injuries to persons or damages to property, which may arise from or in connection with performance of the work hereunder by the Contractor, his agents, representatives, employees, or subcontractors. The cost of such insurance shall be included in the Contractor's bid

A. MINIMUM LIMITS OF INSURANCE

Contractor shall maintain limits no less than:

1. General Liability: $1,000,000 combined single limit per occurrence for bodily injury, personal injury, and property damage including products/completed operations coverage.

2. Automobile Liability: $1,000,000 combined single limit per accident for bodily injury and property damage, when applicable.

3. Workers' Compensation and Employers Liability: Workers' Compensation limits as required by the Labor code of the State of Georgia and Employers Liability limits of $100,000 per accident.

4. Owner's and Contractor's Protective Liability: $1,000,000 combined single limit per occurrence for bodily injury and property damage.

B. DEDUCTIBLES AND SELF-INSURED RETENTION

Any deductibles or self-insured retentions must be declared to and approved by the County. At the option of the County, either: The insurer shall reduce or eliminate such deductibles or self-insured retentions as respects the County, its officers, officials, employees, and volunteers; or the Contractor shall procure a bond guaranteeing payment of losses and related investigations, claim administration and defense expenses.

C. OTHER INSURANCE PROVISIONS

1. General Liability and Automobile Coverages

a. The County, its officers, officials, employees and volunteers are to be covered as insureds as respects: liability arising out of activities performed by or on behalf of the Contractor; products and completed operations of the Contractor; Premises owned, occupied or used by the Contractor; or automobiles owned, leased, hired or borrowed by the Contractor. The coverage shall contain no special limitations on the scope of protection afforded to the County, its officers, officials, employees, or volunteers.

b. The Contractor's insurance coverage shall be primary insurance as respects the County, its officers, officials, employees and volunteers, Any insurance or self-insurance maintained by the County, its officers, officials, employees or volunteers shall be excess of the Contractor's insurance and shall not contribute with it.

c. Any failure to comply with reporting provisions of the policies shall not affect coverage provided to the County, its officers, officials, employees, or volunteers.

d. The Contractor's insurance shall apply separately to each insured against whom claim is made or suit is brought, except with respect to the limits of the insurer's liability.

2. Workers' Compensation and Employers Liability Coverage

The insurer shall agree to waive all rights of subrogation against the County, its officers, officials, employees, and volunteers for losses arising from the work performed by the Contractor for the County.

3. All coverages

Each insurance policy required by this clause shall be endorsed to state that coverage shall not be suspended,

voided, canceled by either party, reduced in coverage or in limits except after thirty (30) days' prior written notice by certified mail, return receipt requested, has been given the County.

D. ACCEPTABILITY

Insurance is to be placed with insurers with a Best's rating of no less than A:VII, or otherwise acceptable to County.

E. VERIFICATION OF COVERAGE

Contractor shall furnish the County with certificates of insurance and with original endorsements effecting coverage required by this clause. The certificates and endorsements for each insurance policy are to be signed by a person authorized by that insurer to bind coverage on its behalf. The certificates and endorsements are to be received and approved by the County before work commences. The County reserves the right to require complete, certified copies of all required insurance policies at any time.

F. SUBCONTRACTORS

Contractor shall include all subcontractors as insureds under its policies or shall furnish separate certificates and endorsements for each subcontractor. All coverages for subcontractors shall be subject to all of the requirements stated herein.

12. INDEMNITY: To the full extent permitted by law, Contractor agrees to defend, indemnify and save harmless Owner, and their agents, servants and employees, from and against any claim, cost, expense, or liability (including legal fees, including but not limited to attorney's fees), attributable to bodily injury, sickness, disease, or death, or to damage to or destruction of property (including loss of use thereof), caused by, arising out of, resulting from, or occurring in connection with the performance of the Work by Contractor, its subcontractors and suppliers, or their agents, servants, or employees, whether or not caused in part by the active or passive negligence or other fault of a party indemnified hereunder,

to the extent allowed by law; provided. However, Contractor's duty hereunder shall not arise if such injury, sickness, disease, death, damage, or destruction is caused by the sole negligence of a party indemnified hereunder. Contractor's obligation hereunder shall not be limited by the provisions of any worker's compensation or similar act. Contractor hereby agrees that One Hundred Dollars and No/Cents ($100.00) of the Price constitutes the separate consideration for Contractor's indemnity hereunder. Such amount shall be deemed paid out of the first application for payment paid hereunder.

Should any person or entity assert a claim or institute a suit, action, or proceeding against Owner involving the manner or sufficiency of the performance of the Work, Contractor shall upon request of Owner promptly assume the defense of such claim, suit, action or proceeding, at Contractor's expense, and Contractor shall indemnify and save harmless Owner as well as anyone to be defended, indemnified and held harmless by Owner and its or their agents, servants, and employees, from and against any liability, loss, damage, or expense arising out of or related to such claim, suit, action, or proceeding.

13. ASSIGNMENT: Contractor shall not assign this contract or any monies due or to become due hereunder without the prior written consent of Owner. No assignment by Contractor of any right hereunder shall be effective and any such attempt shall be null and void. No third party shall have any right to enforce any right of Contractor under this contract. If Owner gives written consent to an assignment of this contract, in whole or in part, Contractor shall not be relieved of its duties and obligations hereunder and shall be and remain fully responsible and liable for the acts and omissions of its assignees. Nothing herein shall prevent Contractor from engaging subcontractors to perform a portion of the Work hereunder. However, Contractor shall be and remain as fully responsible for all persons directly or indirectly employed by such subcontractors, as Contractor is for its own acts and omissions and those of its agents, servants, and employees. Additionally, nothing herein shall prevent any guarantor or surety of Contractor from enforcing any right hereunder after acknowledgment of its obligation as guarantor or surety. Any attempted enforcement of such rights in the absence of an express acknowledgment shall constitute an admission by any guarantor or surety of its obligations under its agreement of guarantee or suretyship.

14. COMPLIANCE: Contractor shall, at its own expense, obtain all necessary licenses and permits pertaining to the Work and comply with all statutes, ordinances, rules, regulations, and orders of any governmental or quasi-governmental authority having jurisdiction over the Work or the performance thereof, including, but not limited to, those relating to safety, wages, discrimination and equal employment opportunity. Contractor shall promptly correct any violations of such statutes, ordinances, rules, regulations and orders committed by Contractor, its agents, servants and employees; and Contractor shall receive and respond to, and shall defend, indemnify and save harmless Owner, as well as anyone to whom Owner is obligated, and their agents, servants and employees from and against any loss, liability, or expense arising from, any such violations and any citations, assessments, fines, or penalties resulting therefrom.

15. SAFETY: Contractor agrees that the prevention of accidents to persons engaged upon or in the vicinity of the Work is its responsibility. Contractor shall establish and implement safety measures, policies, and standards conforming to those required or recommended by governmental or quasi-governmental authorities having jurisdiction.

16. CLEANING UP: Contractor shall, at its own expense: (a) keep the premises at all times free from waste materials, packaging and other debris accumulated in connection with the Work by collecting and removing such debris from the job site on a daily or other basis requested by Owner; (b) at the completion of the Work in each area, sweep and otherwise make the Work in its immediate vicinity "broom-clean;" (c) remove all of its tools, equipment, scaffolds, temporary structures and surplus materials as directed by Owner at the completion of the Work; and (d) at final inspection clean and prepare the Work for acceptance by Owner. Contractor agrees to provide all cleaning and cleanup required under the Contract Documents pertaining to the

Work to the extent such requirements are in excess of those contained in this paragraph.

17. TEMPORARY FACILITIES: All temporary site facilities, such as storage, sheds, water, heat, light, power, toilets, hoists, elevators, scaffolding, cold weather protection, ventilating, pumps, watchman service, etc., required in performing the Work shall be furnished by Contractor. The contractor shall at all time keep all equipment, vehicles, construction materials, etc. clear of the drive area associated with the travel of emergency vehicles.

18. QUALITY: Contractor shall at all times provide first-quality, new materials (unless otherwise specified in the Contract Documents) and workmanship conforming to the Contract requirements. Contractor shall at all times provide proper facilities and an opportunity for the inspection of the Work by Architect and Owner and their representatives. Contractor shall, within forty-eight (48) hours after receiving written notice from Owner, proceed to take down and remove all portions of the Work which Owner shall have condemned as unsound, improper, or in any way failing to conform to the Contract Documents or this Contract and shall replace the same with proper and satisfactory Work and make good all work damaged or destroyed thereby. Owner's failure to discover or notify Contractor of defective or nonconforming Work at the time the Work, or any portion thereof, is performed or completed shall not relieve Contractor of full responsibility for replacement of the defective or nonconforming Work and all damages resulting therefrom.

19. GUARANTEES: Contractor warrants and guarantees the Work to the full extent provided for in and required by the Contract Documents. Without limiting the foregoing or any other liability or obligation with respect to the Work, Contractor shall, at its expense and by reason of its express warranty, make good any faulty, defective, or improper parts of the Work discovered within one year from the date of acceptance of the Project by the Architect and Owner or within such longer period as may be provided in the Contract Documents. Contractor warrants that all materials furnished hereunder meet the requirements of the Contract Documents and impliedly warrants that they are both merchantable and fit for the purposes for which they are to be used under the Contract Documents.

20. SUBMITTALS: Contractor shall immediately prepare or obtain and promptly submit to Owner shop and erection drawings, samples, product data, catalogue cuts, laboratory and inspection reports and engineering calculations, all as may be required by the Contract Documents or as may be necessary or appropriate to describe the details of the Work. Approval of drawings or other submittals by Owner or Architect shall not relieve Contractor of its obligation to perform the Work in strict accordance with the Contract Documents or its responsibility for proper matching of the Work to contiguous work.

21. LIENS: Contractor shall defend, indemnify and save harmless Owner from any lien or claim of lien filed or maintained by any laborer, materialman, subcontractor, or other person or entity directly or indirectly acting for, through, or under Contractor, against the Project or any part thereof or any interest therein or against any monies due or to become due from Owner to Contractor. Without limiting the foregoing, Contractor shall cause any such lien or claim of lien to be satisfied, removed, or discharged by bond, payment, or otherwise within such time as provided under the Contract Documents or ten (10) days from the date of receipt by the Owner, whichever is shorter.

22. PATENTS: Contractor shall defend, indemnify and save harmless Owner, from and against any claim, cost, expense, or liability (including attorneys' fees) arising out of or resulting from infringement or alleged infringement of any patent rights attributable to the Work.

23. LABOR: Contractor agrees that where its Work is stopped, delayed, or interfered with by strikes, slow-downs, or similar interruptions or disturbances (including cases where the Contractors employees are engaged in a work-stoppage solely as a result of a labor dispute involving Owner or others and not in any manner involving Contractor,) Owner shall have the rights and remedies provided for herein. Contractor shall maintain and exercise control over all employees engaged in the performance of the Work, and Contractor shall, to the extent permitted by law, remove or cause to be removed from the Project any employee whose presence is detrimental to the orderly prosecution of the Work. Contractor shall take all necessary steps to restrain and enjoin any illegal picketing, demonstrating, violence, or similar activity against the Contractor at the Project.

24. DAMAGE: Owner shall not be liable or responsible for loss or damage to the equipment, tools, facilities, or other personal property owned, rented, or used by Contractor, or anyone employed by or through Contractor, in the performance of the Work; and Contractor shall maintain such insurance and take such protective action as Contractor deems desirable with respect to such property. Owner shall not be liable or responsible for any loss or damage to the Work, and Contractor shall be responsible for the correction or restoration of any such loss or damage to the Work, or to the work of Owner or any other contractor, resulting from the operations of Contractor, or its subcontractors, agents, servants, or employees hereunder. Contractor shall take all reasonable precautions to protect the Work from loss or damage prior to acceptance by Owner.

25. DEFAULT: Should Contractor at any time: (a) fail to supply the labor, materials, equipment, supervision and other things required of it in sufficient quantities and of required quality to perform the Work with the skill, conformity, promptness and diligence required hereunder; (b) cause interference, stoppage, or delay to the Project or any activity necessary to complete the Project; (c) become insolvent; or (d) fail in the performance or observance of any of the covenants, conditions, or other terms of this Contract, then in any such event, each of which shall constitute a default hereunder by Contractor, Owner shall, after giving Contractor notice of default and seventy-two (72) hours within which to cure, have the right to exercise any one or more of the following remedies:

(i) require that Contractor utilize, at its own expense, overtime labor (including Saturday and Sunday work) and additional shifts as necessary to overcome the consequences of any delay attributable to Contractor's default;

(ii) attempt to remedy the default by whatever means Owner may deem necessary or appropriate, including, but not limited to, correcting, furnishing, performing, or otherwise completing the Work, or any part thereof, by itself or through others (utilizing where appropriate any materials and equipment previously purchased for that purpose by Contractor) and deducting the cost thereof (plus an allowance for administrative burden equal to fifteen percent (15%) of such costs) from any monies due or to become due to Contractor hereunder;

(iii) after giving Contractor an additional seventy-two (72) hours notice (at any time following the expiration of the initial seventy-two (72) hour notice and curative period), terminate the Contract, without thereby waiving or releasing any rights or remedies against Contractor or its sureties, and by itself or through others take possession of the Work, and all materials, equipment, facilities, plant, tools, scaffolds and appliances of Contractor related to the Work, for purposes of completing the Work and securing to Owner the payment of its costs (plus an allowance for administrative burden equal to fifteen percent (15%) of such costs) and other damages under the Contract and for the breach thereof, it being intended that Owner shall, for the stated purposes, be the assignee of and have a security interest in the property described above to the extent located on the Project site; or

(iv) call upon the surety, if applicable, to perform in accordance with the performance bond.

(v) recover from Contractor all losses, damages, penalties and fines, whether actual or liquidated, direct or consequential (including without limitation any increase in Owner's cost of insurance resulting from Contractor's failure to maintain insurance coverages required hereunder), and all reasonable attorneys' fees suffered or incurred by Owner by reason of or as a result of Contractor's default.

After completion of the Work by the exercise of any one or more of the above remedies and acceptance of the Work by Owner, Owner shall promptly pay Contractor any undisbursed balance of the Price, if any. If the cost of completion of the Work plus the allowance for administrative burden, together with any other damages or losses sustained or incurred by Owner, shall exceed the undisbursed balance of the Price, Contractor and its guarantors, surety, or sureties shall pay the difference within fifteen (15) days of written demand from Owner.

The foregoing remedies shall be considered separate and cumulative and shall be in addition to every other remedy given hereunder or under the Contract Documents, or now or hereafter existing at law or in equity. Contractor's guarantors, surety, or sureties agree to be bound to Owner with respect to such remedies notwithstanding any provision of the bonds as described herein.

Except as limited by this Contract, Contractor shall have the rights and remedies available at law or in equity for a breach of this Contract by Owner. Any default shall be deemed waived unless Contractor shall have given Owner written notice thereof within five (5) days after the occurrence of such default. Contractor shall not be entitled to stop the Work or terminate this Contract on account of Owner's failure to pay an amount claimed due hereunder (including payment for claimed changed Work) so long as Contractor shall not have adequately substantiated the amount due or so long as a good faith dispute exists as to the amount due. Contractor shall not be entitled to stop the Work on account of a default by Owner unless such default shall have continued for more than ten (10) days after Owner's receipt of written notice of such default from Contractor, specifying in detail the nature of the default and the steps necessary to cure the claimed default.

Contractor shall not be entitled to terminate this Contract except for a substantial and material breach by Owner which shall have continued, uncured, for at least an additional thirty (30) days after (a) Contractor shall have stopped working in accordance with this paragraph and (b) Owner shall have received thirty (30) days written notice of Contractor's intention to terminate this Contract.

Should any termination for default under paragraph 25 (iii) be determined to be invalid, improper or wrongful, such termination shall be deemed to have been a termination for convenience as provided in paragraph 27 below.

26. DISPUTES: If a dispute should arise between Owner and Contractor under or related to the Contract, or the breach thereof, then either party may seek redress of its grievances as to such disputes at law or in equity or by arbitration if both parties agree after default or breech to arbitrate. The award rendered by arbitrators shall not be final or binding. Contractor agrees to continue to perform its Work despite the existence of disputes. The existence of a dispute shall not be grounds for any failure to perform by Contractor nor limit the right of Owner to proceed, in good faith, to remedy any default by Contractor.

27. EARLY TERMINATION: Should this Contract be terminated based on default, Contractor shall assign all purchase orders and subcontracts to Owner if Owner, in its sole discretion, requests such assignments. Contractor agrees to incorporate such provisions in its agreements with suppliers and subcontractors to effectuate this provision. Nothing herein shall create any duty on the part of Owner to accept the assignment of any purchase order or subcontract hereunder.

Further, in its sole discretion and without notice to any guarantors, surety, or sureties, Owner may terminate this Contract for its convenience upon the giving of written notice to Contractor. In no event shall Contractor be entitled to consequential damages or loss of profits on portions of the Work not yet performed. If terminated for convenience, Contractor shall be entitled to be paid all costs of all Work provided hereunder including reasonable and necessary costs of termination, as determined in accordance with the method set forth in paragraph 8 above, together with the Profit Percentage attributable to the costs so determined. Payment shall be made in accordance with and subject to the requirements of paragraph 4.

28. SETOFF: If Contractor is, or hereafter begins, performing any other work for Owner other than the Work under this Contract and the unpaid balance of the Price becomes insufficient to complete such Work or compensate Owner for any damages or deficiencies by the Contractor in the performance of the other work, Contractor hereby consents and agrees to allow Owner, in its sole discretion and judgment, to setoff any of Owner's claims against any funds due, or which may become due, Contractor under any other agreement with Owner, or any contract on any other project. No refusal or failure of Owner to

exercise its rights hereunder shall constitute the basis of any right or claim against Owner.

29. MISCELLANEOUS: (a) All matters relating to the validity, performance, or interpretation of this Contract shall be governed by the laws of the State of Georgia, performance, or interpretation, as the case may be, of the Contract. This Contract is entered into in Cobb County and all services under this Contract are capable of being performed and are to be performed in Cobb County, Georgia. Therefore, the parties agree that Cobb County is the proper venue for the resolution of any disputes.

(b) This Contract, including the documents incorporated herein by reference, embodies the entire agreement of the parties and supersedes all prior negotiations, agreements, and understandings related to the subject matter hereof.

(c) This Contract may not be changed in any way except as herein provided or by a writing signed by a duly authorized officer or agent of each party. No requirement of this Contract may be waived except in writing signed by a duly authorized officer of the waiving party.

(d) The provisions of this Contract and the Contract Documents are intended to supplement and complement each other. If, however, any provision of this Contract irreconcilably conflicts with a provision of the Contract Documents, the provision imposing the greater duty on the Contractor shall govern. In case a provision of this Contract is held to be invalid, illegal, or unenforceable, the validity, legality, and enforceability of the remaining provisions shall not be affected.

(e) Where the context requires, neuter terms used herein shall include the masculine and feminine, and singular terms shall include the plural, and vice versa.

IN WITNESS WHEREOF, the parties have duly executed this Contract as of the date first above written.

COBB COUNTY BOARD OF COMMISSIONERS, COBB COUNTY, GEORGIA

By: _____ Date: _____

Title: _____

By: _____ Date: _____
Contractor

Title: _____

CONTRACTOR CHECK ONE: ( )Corporation ( )Partnership/Joint Venture ( )Individual

LICENSING: By executing this Contract, Contractor affirms that it holds the following contractor license(s) applicable to the Work as required by the State of Georgia:
License No(s):_____ License Classification(s):_____ Expiration Date:

FEDERAL EMPLOYER
ID #:_____ BUSINESS LICENSE #_____

SCHEDULE A - WORK: Pursuant to paragraph 1 of this Contract, Contractor shall prosecute and complete the following Work:
The contractor shall complete all work per the Contract Documents and Drawings.
Contractor acknowledges that this is an occupied public building, and as such, certain precautions will be required of the contractor in regards to noise and dust control and safety of the public and staff. All work shall be coordinated through the Project Manager.

SCHEDULE B - CONTRACT DOCUMENTS: The Contract Documents referred to in paragraph 1 and elsewhere in this Contract consist of the Contract and the following:

Project Manual: dated 8/ /
Titled: Federal Energy Grant – HVAC Improvements – Cobb County Central Library
Contractor's proposal: dated X, 2010

SCHEDULE C - SUPPLEMENTAL PRICE SCHEDULE:

UNIT PRICES: Pursuant to paragraphs 2 and 8 of this Contract, the following unit prices shall be used in determining the Price and any adjustments thereto, without limitation unless expressly provided herein: N/A

ALLOWANCES: The price specified on page 1 of the Contract includes the following allowances for the parts of the Work specified below, to be furnished by Contractor in accordance with the Contract Documents: N/A

SCHEDULE D - PERFORMANCE SCHEDULE: Pursuant to paragraph 6 of this Contract and without limiting the provisions thereof, Contractor shall perform the Work according to the following specific schedule, and as the same may be revised from time to time by Owner:

Time is of the essence is repeated for emphasis.

Contractor to complete all work within sixty (60) calendar days from Owner's "Notice to Proceed". Should the Contractor fail to substantially complete the work under this contract per the specified schedule, he shall pay Owner liquidated damages $250.00 per calendar day for each consecutive calendar day until project is complete; which sum is agreed upon as a reasonable and proper measure of damages which owner will sustain per diem by failure of Contractor to complete work within time as stipulated; it being recognized by Owner and Contractor that the injury to Owner which could result from a failure of Contractor to complete on schedule is uncertain and cannot be computed exactly. In no way shall costs for liquidated damages be construed as a penalty on the Contractor. Contractor shall not be entitled to any compensation should he finish early.

Initials: _____
_____

BID BOND

KNOW ALL MEN BY THESE PRESENTS, that we, the undersigned, _____ _____ as Principal, and _____ as Surety, are hereby held and firmly bound unto _____ as the OWNER, in the penal sum of $_____ for payment of which, well and truly made, we hereby jointly and severally bind ourselves, successors and assigns.

Signed this _____ day of _____, 20_____. The Principal has submitted to ___ _____ a certain BID, attached hereto and hereby made a part hereof to enter into a contract in writing for the _____ _____.

NOW, THEREFORE,

(a) If said BID shall be rejected or

(b) If said BID shall be accepted and the principal shall execute and deliver a contract in the Form of Contract attached hereto (properly completed in accordance with said BID), and shall furnish a BOND for his faithful performance of said contract, and for the payment of all persons performing labor or furnishing materials in connection therewith, and shall in all other respects perform the agreement created by the acceptance of said BID,

then this obligation shall be void, otherwise the same shall remain in force and effect; it being expressly understood and agreed the liability of the Surety for any and all claims hereunder shall, in no event, exceed the penal amount of this obligation as herein stated.

The surety, for value received, hereby stipulates and agree that the obligations of said Surety and its BOND shall be in no way impaired or affected by any extension of the time within which the OWNER may accept such BID; and said Surety does hereby waive notice of any such extension.

IN WITNESS WHEREOF, the Principal and the Surety have hereunto set their hands and seals, and such of them as are corporations have caused their corporate seals to be hereto affixed and these presents to be signed by their proper officers, the day and year first set forth above.

_____ (L.S.)
Principal

_____ Seal
Surety

By: _____ Seal

IMPORTANT - Surety companies executing BONDS must appear on the Treasury Department's most current list (Circular 570 as amended) and be authorized to transact business in the state where the project is located.

CERTIFICATE OF SUBSTANTIAL COMPLETION

PROJECT: Federal Energy Grant – HVAC Improvements – Cobb County Administration Building Cobb County, Georgia

CONTRACT DATE:

OWNER: **Cobb County Board of Commissioners**
100 Cherokee Street
Marietta, Georgia 30060

CONTRACTOR:

DATE OF ISSUANCE:

The Work performed under this Contract has been reviewed and found, to the Owner's best knowledge, information and belief, to be substantially complete. Substantial Completion is the stage in the progress of the Work when the Work or designated portion thereof is sufficiently complete in accordance with the Contract Documents so the Owner can occupy or utilize the Work for its intended use.

The issuance date of Substantial Completion is also the date of commencement of applicable warranties required by the Contract Documents.

_____

_____

A list of items to be completed or corrected is attached hereto. The failure to include any items on such list does not alter the responsibility of the Contractor to complete all Work in accordance with the Contract Documents.

OWNER
Cobb County Board of Commissioners
100 Cherokee Street
Marietta, Georgia 30060

CONTRACTOR

By:_____

By:_____

Date:_____

Date:_____

CERTIFICATE OF FINAL COMPLETION

CERTIFICATE OF FINAL COMPLETION

Distribution to:

Construction Department	☐	Architect/Engineer	☐
Owners	☐	Contractor	☐
Other	☐	Other	☐

PROJECT: Federal Energy Grant - HVAC Improvements – Cobb County Administration Building

CONTRACT DATE: _____

To: Cobb County Board of Commissioners
100 Cherokee Street
Marietta, Georgia 30060

CONTRACTOR: _____

CONTRACT FOR: _____

ARCHITECT/ENGINEER: _____

DATE OF COMMENCEMENT: _____

SUBSTANTIAL COMPLETION DATE: _____

DATE OF FINAL COMPLETION

The Work performed under this contract has been inspected and found to be finally complete. The Date of Final Completion of the Project is hereby established as _____.
[Date]

Failure to identify incomplete work items or requirements of Contract Documents prior to issuance of the Certificate does not alter the responsibility of the contractor to comply with all provisions of Contract Documents.

[Contractor]	[By]	[Date]

Based on our inspection and to the best of our knowledge, information and belief, the Work has been completed in accordance with the terms and conditions of the Contract Document and we recommend acceptance of the Work by the Owners.

[General Contractor – Construction]	[By]	[Date]
[Professional or Architect/Engineer]]	[By]	[Date]
[Property Management]	[By]	[Date]

Except as provided in the Contract Documents attached hereto, the Owner/Using Department accepts the Project as finally complete and accepts responsibility for security, maintenance, heat, utilities, damage to the Work, and insurance, that has not been previously transferred from the Contractor.

[Owner]	[By]	[Date]

Contract Date:

CONSTRUCTION CHANGE DIRECTIVE _____ **Change Directive Date**:

Owner: Cobb County Board of Commissioners

Contractor:

Project: Federal Energy Grant – HVAC Improvements – Cobb County Administration Building

The Contractor is directed and authorized to perform the work as described below:

[description here]

---

1. By this Change Directive the proposed adjustment to the Contract Sum is:
   Lump Sum (increase ☐) (decrease ☐)..... $

2. The Contract Time is to (be adjusted ☐) (remain unchanged ☐). The adjustment, if any, is (an increase of _____ days) (a decrease of _____ days).

The Contractor understands and agrees that this contract document is authorization to proceed with the work described above and that the Contract Agreement will be finalized by a formal change order at a later date.

THIS DOCUMENT IS NOT VALID UNLESS SIGNED BY THE OWNER, PROFESSIONAL, AND GENERAL CONTRACTOR

PROFESSIONAL	**GENERAL CONTRACTOR**	**OWNER**
Lilly Young & Associates, Inc. 4272 Shackleford Rd. – Suite 130 Norcross, Georgia 30093		COBB COUNTY BOARD OF COMMISSIONERS 100 Cherokee Street Marietta, Georgia 30060
Name/Title:	Name/Title:	Name/Title:
Signature:	Signature:	Signature:
Date:	Date:	Date:

Contract Date: _____

SUPPLEMENTAL AGREEMENT **SA Date**: _____

Owner: Cobb County Board of Commissioners

Builder:

Project: Federal Energy Grant – HVAC Improvements – Cobb County Administration Building

This Supplemental Agreement amends the contract dated _____. The signature of the Builder indicates his agreement herewith, including any adjustments in the Contract Sum or Contract Time. This price and payment constitutes full and final compensation fro all costs in connection with the incidental to this Supplemental Agreement. The signature of the Builder also indicates his agreement that this price and payment constitutes full and final satisfaction of all claims of the Builder, which he has or may have for adjustment of the contract Sum or Contract Time through the date of this Supplemental Agreement. Pursuant to the terms of the above reference Contract, Builder is directed to make the following changes in the Work:

Item #1: $

Item #2 $

Original Contract Amount ..... $
Previous Supplemental Agreement Total Amount ..... $
Contract Sum Prior to this Supplemental Agreement ..... $
By this Supplemental Agreement the proposed adjustment to the
Contract Sum is: Lump Sum (increase ☐) (decrease ☐) of ..... $
New Contract Amount ..... $
The Contract Time is to (be adjusted ☐) (remain unchanged ☐). The adjustment, if any, is (an increase of days ☐) (a decrease of days ☐).

ACCEPTED – *The above prices and specifications of this Supplemental Agreement are satisfactory and are hereby accepted. All work to be performed under same terms and conditions as specified in original contract unless before or herein modified.*

THIS DOCUMENT IS NOT VALID UNLESS SIGNED BY THE OWNER, PROFESSIONAL, AND BUILDER

PROFESSIONAL	**BUILDER**	**OWNER**
Lilly Young & Associates Inc. 4275 Shackleford RD – Suite 130 Norcross, Georgia 30093		COBB COUNTY BOARD OF COMMISSIONERS 100 Cherokee Street Marietta, Georgia 30060
Name/Title:	Name/Title:	Name/Title:
Signature:	Signature:	Signature:
Date:	Date:	Date:

Contract Date:

FINAL CLOSEOUT
SUPPLEMENTAL AGREEMENT NUMBER _____ **SA Date**:

Owner: Cobb County Board of Commissioners

Builder:

Project: Federal Energy Grant – HVAC Improvements – Cobb County Administration Building

This Supplemental Agreement amends the contract dated . The signature of the Builder indicates his agreement herewith, including any adjustments in the Contract Sum or Contract Time. This price and payment constitutes full and final compensation for all costs in connection with the incidental to this Supplemental Agreement. The signature of the Builder also indicates his agreement that this price and payment constitutes full and final satisfaction of all claims of the Builder, which he has or may have for adjustment of the contract Sum or Contract Time through entire project. Pursuant to the terms of the above reference Contract, Builder is directed to make the following changes in the Work:

Item #1: $

Item #2 $

Original Contract Amount ..... $
Previous Supplemental Agreements Total Amount ..... $
Contract Sum Prior to this Supplemental Agreement ..... $
By this Supplemental Agreement the proposed adjustment to the Contract Sum is:
Lump Sum (increase ☐) (decrease ☐) of ..... $
New Contract Amount ..... $
The Contract Time is to (be adjusted ☐) (remain unchanged ☐). The adjustment, if any, is (an increase of days ☐) (a decrease of days ☐).

ACCEPTED – *The above prices and specifications of this Supplemental Agreement are satisfactory and are hereby accepted. All work to be performed under same terms and conditions as specified in original contract unless before or herein modified.*

THIS DOCUMENT IS NOT VALID UNLESS SIGNED BY THE OWNER, PROFESSIONAL, AND BUILDER

PROFESSIONAL	**BUILDER**	**OWNER**
Lilly Young & Associates, Inc. 4275 Shackleford Rd – Suite 130 Norcross, Georgia 30093		COBB COUNTY BOARD OF COMMISSIONERS 100 Cherokee Street Marietta, Georgia 30060
Name/Title:	Name/Title:	Name/Title:
Signature:	Signature:	Signature:
Date:	Date:	Date:

SECTION 00 8200
LIQUIDATED DAMAGES

PART 1 GENERAL

1.01 DESCRIPTION: The Contractor shall achieve Substantial Completion and Final Completion not later than the dates shown on the Notice to Proceed.

1.02 ACHIEVEMENT OF COMPLETION

A. Should the Contractor neglect, fail or refuse to achieve Substantial Completion of the Work on the project by not later than 12:00 midnight, on the date stated in the Notice to Proceed, or as revised by Change Order, he shall pay to the Owner as liquidated damages the amount shown below per calendar day for each day that he is in default after the stipulated date: **$500.00** per calendar day.

B. Should the Contractor neglect, fail or refuse to achieve Final Completion of the Work on the project by not later than 12:00 midnight on the date stated in the Notice to Proceed, or as revised by Change Order, no part of the sum retained to insure the completion of the contract will be paid to the Contractor until the work is completed and the Contractor shall pay to the Owner as liquidated damages the amount shown below per calendar day for each day that he is in default after the stipulated date: **$ 250.00** per calendar day.

C. If both the Substantial Completion and Final Completion dates have not been achieved, liquidated damages for default on the Substantial Completion and the Final Completion dates shall be added and shall be: **$ 750.00** per calendar day until Substantial Completion is achieved; after which, the amount for failure to achieve Final Completion will continue to be paid as liquidated damages to the Owner until Final Completion.

1.03 If by Addendum, Alternate or Change Order the provisions for liquidated damages are deleted, completion time remains as proposed and is the essence of the Contract and in lieu thereof, the Owner has a right to pursue the collection of actual damages under existing State statutes and/or law.

END OF SECTION

APPLICATON AND CERTIFICATE FOR PAYMENT

TO (OWNER):

PROJECT:

APPLICATION NO:

Distribution to:
- ☐ OWNER
- ☐ PROFESSIONAL
- ☐ BUILDER
- ☐
- ☐

FROM (BUILDER):

VIA (PROFESSIONAL):

PERIOD END DATE:
PROFESSIONAL'S
PROJECT NO:

CONTRACT FOR:

CONTRACT DATE:

BUILDER'S APPLICATION FOR PAYMENT

CHANGE ORDER SUMMARY			
		ADDITION	DEDUCTIONS
Previously approved Change Orders TOTAL			
Approved this Month			
Number	Date Approved		
TOTALS			
Net change by Change Orders			

The undersigned Builder certifies that to the best of the Builder's knowledge, information and belief the Work covered by this Application for Payment has been completed in full accordance and compliance with the Contract Documents, that Builder has paid all subcontractors and materialmen all amounts due them for which the Contractor has received payment from the Owner, and that payment shown herein is now due.

BUILDER:

By: _____ Date: _____

Application is made for Payment, as shown below, in connection the Contract. Continuation Sheet is attached.

1. **ORIGINAL CONTRACT SUM** $ _____
2. **Net change by Change Orders** $ _____
3. **CONTRACT SUM TO DATE** (Line 1 ‡ 2) $ _____
4. **TOTAL COMPLETED & STORED TO DATE** $ _____
   (Column G)
5. **RETAINAGE:**
   a. _____% of Completed Work $ _____
   (Column D + E)
   b. _____% of Stored Material $ _____
   (Column F)
   Total Retainage (Line 5a + 5b or Total in Column 1) $ _____
6. **TOTAL EARNED LESS RETAINAGE** $ _____
   (Line 4 less Line 5 Total)
7. **LESS PREVIOUS CERTIFICATES FOR PAYMENT** (Line 6 from prior Certificate) $ _____
8. **CURRENT PAYMENT DUE** $ _____
9. **BALANCE REMAINING TO COMPLETE, PLUS RETAINAGE** $ _____
   (Line 3 less Line 6)

State of: County of:
Subscribed and sworn to before me this day of , 20
Notary Public:
My Commission expires:

PROFESSIONAL'S CERTIFICATE FOR PAYMENT

In accordance with the Contract Documents, based on review of this application, including data, information, and schedules submitted by the Builder, together with inspection of the Work , the Professional certifies to the Owner that to the best of the Professional's knowledge, information and belief the Work has progressed as indicated, the quality of the Work is in accordance with the Contract Documents, and the Builder is entitled to payment of the AMOUNT CERTIFIED.

AMOUNT CERTIFIED……..$ _____
(Attach explanation if amount certified differs from the amount applied for.)
PROFESSIONAL:

By: _____ Date: _____

This Certificate is not negotiable. The AMOUNT CERTIFIED is payable only to the Builder named herein. Issuance, payment and acceptance of payment are without prejudice to any rights of the Owner or Builder under this Contract.

SECTION 15000

HVAC GENERAL

PART 1 - GENERAL

1.01 GENERAL REQUIREMENTS

A. Refer to Division 1 - General Requirements and any and all Supplementary or Special Requirements, all of which apply to work described in Division 15 – HVAC as if written in full herein.

B. The scope of work described in these Specifications and/or indicated on the Drawings shall include the furnishing of all materials, equipment, appurtenances, accessories, connections, labor, etc. required and/or necessary to completely install, clean, inspect, adjust, test, balance and leave in safe and proper operating condition all HVAC systems. All HVAC work shall be accomplished by workmen skilled in the various trades involved.

C. The Drawings and Specifications are complementary to each other and what is called for by one shall be as binding as if called for by both. If a discrepancy exists between the Drawings and Specifications, the higher implied cost shall be included in the bid, and the Architect shall be notified of the discrepancy in writing.

1.02 CODES AND STANDARDS

A. All HVAC work shall conform to all ordinances and regulations of the City, County and State where the work will take place, including the requirements of all authorities having jurisdiction. The following codes, standards and references shall be observed as a minimum:

1. The 2006 International Codes
2. Georgia State Amendments to the Code
3. National Fire Protection Association (NFPA) Standards and Guidelines
4. Local and State Fire Marshal requirements
5. Local Building and Inspection Department requirements
6. American Society of Heating, Refrigerating and Air Conditioning Engineers, Inc. (ASHRAE)
7. Sheet Metal and Air Conditioning Contractors' National Association, Inc. (SMACNA) Manuals
8. Underwriters Laboratories Inc. (UL)
9. Americans with Disabilities Act (ADA)

B. If Code or other requirements exceed the provisions shown on the Contract Documents, the Engineer shall be notified in writing. Where requirements of the Contract Documents exceed Code requirements, work shall be furnished and installed in accordance with the Contract Documents. Any work done contrary to these requirements shall be removed and replaced at the Contractor's expense.

1.03 WORK INCLUDED

The HVAC Systems installed and work performed under this Division of the Specifications shall include, but not necessarily be limited to:

A. Airside Systems

1. Equipment: including fans, unitary air conditioners, air handling units, fan-coil units, make-up air units, dedicated outdoor air units, furnaces, split systems, etc.
2. Ductwork and Accessories: including sheet metal, duct-board, kitchen hood and dishwasher exhausts, flexible ductwork, fire and smoke dampers, access doors, etc.
3. Air Terminal Devices: including powered induction units, variable air volume valves, etc.
4. Air Distribution Devices: including louvers, registers, grilles, diffusers, etc.

B. Refrigerant and Water Systems

1. Equipment: including pumps, air separators, expansion tanks, water chillers, cooling towers, heat exchangers, boilers and space heating water heaters, feed-water systems, condensing units, etc.
2. Piping, Tubing and Accessories: including pipe, refrigerant tubing, valves, solenoids, thermal expansion valves, strainers, air vents, pipe and equipment drains, condensate drains, etc.

C. Equipment, Ductwork and Piping Supports

1. Equipment Mounts: including roof curbs, concrete housekeeping pads, equipment rails, miscellaneous steel, etc.
2. Hangers and Support Devices: including inserts, hanger rods, unistrut, cross-bracing, anchor bolts, pipe anchors, restraints, etc.
3. Vibration Isolation and seismic restraint: including inertia bases, flexible couplings, expansion devices, snubbers, springs, waffle pads, seismic restraints, etc.

D. Insulation

1. Ductwork Insulation: including exterior duct wrap, internal duct liner, fire wrap, etc.
2. Piping and Equipment Insulation: including preformed, board and wrap.

E. Miscellaneous HVAC Equipment: Unit heaters, wall heaters, roof hoods, heat tracing, etc.

F. Automatic Temperature Controls

1. Decentralized: including all thermostats, control dampers, control valves, programmable controllers, line and low-voltage wiring, smoke detectors, pressure sensors, gas sensors, control logic, etc.
2. Building Automation System (BAS): same as above but networked to a central human-machine computer interface, including all software and programming, display graphics, etc.

G. Labor and Equipment: including project management, supervision, tradesmen, lifts, fork-trucks, cranes, scaffolding, saws, wrenches, etc.

H. Equipment and Valve Identification

I. Start-up and Commissioning

J. Demonstration and Owner Training

K. Testing, Adjusting and Balancing

1.04 ENGINEER'S DRAWINGS

A. The locations, arrangement and extent of equipment, devices, ductwork, piping, and other appurtenances related to the installation of the HVAC work shown on the Drawings are approximate and define the intent of the design. The Contractor shall not scale Engineer's Drawings, but shall refer to the architectural drawings for exact dimensions of building components. Should a conflict exist between the architectural and engineering drawings regarding dimensions and scale, the Contractor shall notify the Architect of the discrepancy.

B. Materials, equipment or labor not indicated but which can be reasonably inferred to be necessary for a complete installation shall be provided. Drawings and Specifications do not undertake to indicate every item of material, equipment, or labor required to produce a complete and properly operating installation.

1.05 EQUIPMENT, MATERIALS AND BID BASIS

A. Manufacturers' names, model numbers, etc. cited on the Drawings and in the Specifications are for the purpose of describing type, capacity, function and quality of equipment and materials required. All project design and coordination between disciplines has been performed as if the named manufacturer and specific piece of equipment will be provided to the project by the Contractor.

B. Alternate equipment and/or materials other than that named on the Drawings and in the Specifications may be proposed for use, but all equipment and materials shall conform entirely to the specified base items. Proposed alternate equipment shall be substantially equal in size, weight, construction and capacity. Alternate equipment and materials shall be submitted only as full equivalent to the equipment and materials specified, with sufficient supportive documentation and technical literature to demonstrate quality, performance, and workmanship without doubt or question. Requests for prior approval of alternate products shall be made at least ten (10) days prior to the bid date and as required by Division 1 - General Requirements. The Engineer shall consider the use of the alternate equipment based on the supportive documentation made available to him, and shall approve or disapprove any proposed alternates. The decision of the Engineer shall, in all cases, be final.

C. The Contractor shall coordinate the installation of all HVAC equipment proposed for use in this project with all building trades (architectural, structural, electrical, etc.). Coordination shall be accomplished prior to, and shall be reflected in, the equipment submittals for approval. When the Contractor requests substitution of alternate equipment, it is with the knowledge that he shall be responsible for any and all costs required by the substitution, including necessary engineering and construction revisions in his or any other contract or trade to satisfy the design intent shown on the Plans and described in the Specifications.

1.06 SUBMITTALS

A. The Contractor shall prepare, submit and obtain Engineer's review of all manufacturers' data on the HVAC equipment and systems prior to ordering, purchasing or installing any equipment or materials. Six (6) hard copies of the complete submittal are required, five of which will be reviewed and returned by the engineer. Electronic submittals (e.g. .pdfs, etc.) may be acceptable, if approved by the architect and described in Division 1 – General Requirements. All submittals shall be transmitted simultaneously in hard ring binders (or in a single .zip file), with the associated specification sections cited and the items submitted clearly identified. Partial submittals will be returned without review. Submittals, as a minimum, shall include:

1. All HVAC items scheduled on the Drawings
2. Equipment arrangement, ductwork and piping drawings. Contractor drawings shall be prepared at a minimum scale of 1/8" = 1'-0". A scale of 1/4" = 1'-0" scale is preferred. Drawings shall be indicative of actual equipment purchased and shall show all offsets, transitions, fittings, dampers, valves, hanger locations, etc. Sections are required in spatially tight areas (e.g. kitchens, laundries, central plants, mechanical rooms, etc.) The following will guide the Contractor as to minimum drawing detail required:
    a. Clearly indicate top and bottom of duct and pipe elevations. All elevations shall be coordinated as to not conflict with structural, plumbing, electrical and architectural trades.
    b. Indicate all offsets (both vertical and horizontal).
    c. Indicate graphically all duct and pipe joints and their lengths.
    d. Submit duct and pipe-work fabrication schedule indicating duct size range with minimum duct material gauges, pipe schedule being used, duct and pipe connection joint types, section lengths, duct reinforcement type and spacing, etc.
    e. Indicate graphically all ductwork to be fabricated with internal duct liner.
    f. Indicate all insulation for ductwork and piping.
    g. Indicate all dampers and valves as shown on design documents and called for in the specifications.
    h. Indicate all flexible connectors where required by specifications and notes.
3. Flexible ductwork, duct-board, insulation and linings
4. Dampers, louvers, air distribution devices
5. Manufacturer's cut sheets of all piping and tubing materials
6. Where split systems are used in a "long line application," submit manufacturer's refrigerant line set routing drawings and engineered calculations supporting the recommended suction and liquid line sizes. Identify and provide cut sheets of any and all accessories required to make the system complete, functional and reliable.
7. Valves, thermometers, pressure gauges
8. Roof curbs, equipment supports, hanger systems, vibration isolators, seismic restraints
9. Control equipment, systems and diagrams
10. Test and balance reports

B. All submittal approvals required by any code or enforcement authority, insurance underwriter, etc. shall be obtained prior to being submitted to the Engineer.

C. Review of submittals by the Engineer does not relieve the Contractor from responsibility for complying with all requirements of the Contract Documents.

Furthermore, it shall be the responsibility of the Contractor to coordinate the requirements (roof penetrations, wall penetrations, floor penetrations, curbs, electrical, etc.) of all approved equipment with the other trades and disciplines.

D. All submittals shall be identified by the equipment mark or tag identification numbers shown on the Contract Drawings. Each individual submittal item shall be marked to show which specification section pertains to the item.

E. The Contractor shall provide a written statement confirming coordination of voltage requirements for all HVAC equipment requiring an electrical connection. Statement shall bear the names and signatures of the HVAC and electrical contractors. A photocopied reproduction of the below statement is acceptable.

VOLTAGE COORDINATION STATEMENT

This statement is to confirm that the voltages of the equipment provided under this specification have been coordinated with the Electrical Drawings, as well as with the Electrical Contractor.

HVAC Contractor: _____

Project Manager Name: _____

Project Manager Signature/Date: _____

Electrical Contractor: _____

Project Manager Name: _____

Project Manager Signature/Date: _____

1.07 PERMITS

A. The Contractor shall obtain all permits and inspections required for the installation of the HVAC work and pay all charges incident thereto. He shall deliver copies of all certificates of permit and inspection to the Architect.

1.08 COORDINATION OF TRADES

A. The Contractor shall give full cooperation to other trades, and shall furnish all information necessary to permit the work of all trades to be installed satisfactorily and with the least possible interference or delay.

B. Piping and other HVAC equipment shall not be installed without first coordinating the installation of same with other trades. The Contractor, at his own expense, shall relocate all uncoordinated ductwork, piping and other HVAC equipment installed should they interfere with the proper installation and mounting of electrical, plumbing equipment, ceilings and other architectural or structural finishes.

C. The Contractor shall coordinate the elevations of all ductwork, piping and equipment above ceilings and in exposed areas with the work of all other disciplines prior to installation.

D. In areas where more than one trade is required to use common openings in beams, joists, chases, shafts and sleeves for the passage of conduits, raceways, piping, ductwork and other materials, the Contractor must coordinate the positions of all piping and equipment to be furnished under this section so that all items including the materials and equipment of other trades may be accommodated within the space available.

E. The HVAC Contractor shall confirm that his work does not interfere with the clearances required for finished columns, pilasters, partitions, walls or other architectural or structural elements as shown on the Contract Documents.

F. Work that is installed under this Contract which interferes with the architectural design or building structure shall be removed and relocated as required at no additional cost to the Contract.

1.09 OPERATION AND MAINTENANCE MANUALS

A. The Contractor shall prepare a minimum of two (2) instruction manuals, one of which shall be submitted to the Architect for the Engineer's review. Manuals shall describe installation, operation and maintenance of all HVAC equipment and shall include copies of control schematics, sequences of operation, function and operations of all components, as well as the Contractor's name, address, and telephone number. Manuals shall also contain one copy of all manufacturers' drawings, pamphlets, data, parts lists, and instruction manual for each piece of equipment. Upon approval, one copy shall be delivered to the Owner; one copy shall be kept by the Contractor. The pamphlets and drawings are to be neatly bound in (a) 3-ring binder(s).

1.10 AS-BUILT DRAWINGS

A. The Contractor shall maintain a record of all changes in the work from that shown in the Contract Documents. The record shall be by red-line mark-up on the most current set of Engineer's Drawings kept in the field office. After all work is

completed, the Contractor shall prepare a set of "as-built" reproducible drawings of similar type and quality as the Engineer's Drawings. As-built drawings shall accurately depict actual final arrangement of all HVAC items. As-built drawings shall be delivered to the Architect.

1.11 WARRANTY

A. All equipment furnished and installed under this Contract shall be provided with the manufacturer's standard warranty unless otherwise noted.

B. All reciprocating and scroll air conditioning compressors shall be provided with an extended 5-year parts warranty.

C. The Contractor shall make good all defects in material, equipment, or workmanship disclosed within a period of one (1) year from date of building acceptance by the Owner. The phrase "make good" shall mean to furnish promptly, without charge, all work necessary to remedy the defects to the satisfaction of the Engineer.

PART 2 - PRODUCTS

2.01 GENERAL

A. All equipment, materials, accessories, etc. used shall be new and of current production unless specified otherwise. Equipment not specified in the Engineer's Drawings shall be suitable for the intended use and shall be subject to approval by the Engineer.

B. All equipment, products and materials shall be free of defects and shall be constructed to operate in a safe manner without excessive noise, vibration, leakage, or wear.

C. All equipment shall bear the inspection Label of Underwriters Laboratories Inc.

D. All equipment and material for similar applications or systems shall be provided from the same manufacturer unless noted otherwise.

2.02 ELECTRICAL WORK

A. Except as otherwise specified or noted, electrical equipment used in HVAC systems shall be as specified herein.

B. Motor controls, system controls, starters, pilot lights, push buttons, etc. shall be furnished by the HVAC Contractor complete as a part of the motor or apparatus

that it operates. Electrical equipment shall be wired for the voltage shown on the Electrical Engineer's Drawings.

C. Electric motors shall be high efficiency, open drip-proof type unless otherwise specified. Motors shall be standard NEMA continuous duty type and shall bear the UL Label. Motors shall be selected with a minimum of 15% safety factory greater than the fan brake/horsepower (e.g. 4.75 BHP would require a nominal 7-1/2 HP motor). The motor service factor shall not be used as part of the safety factor. All motors shall have thermal overload protection. Motors shall meet Table MG-1-12C of EPACT 1992.

D. Motors controlled by a variable frequency drive (VFD) shall be inverter duty rated and fully compatible with the VFD provided.

E. Starters for motors 1/3 HP and smaller shall be manual type, and for 1/2 HP and larger, shall be magnetic type. Starters shall be minimum size 0, combination type (with disconnect and lockable handle) with molded case circuit breaker. Starters for motors with remote or automatic control shall be magnetic. Relays, interlocks and auxiliary contacts shall be provided as specified and required.

F. Magnetic motor starters shall be across-the-line, full voltage, non-reversing type unless otherwise indicated on the Drawings or specified herein. Starters for motors 75 HP and greater shall be solid state, reduced voltage type.

G. Motor controls shall be either "Hand-Off-Auto" switches or "On-Off" push buttons with one indicating light. "Hand-Off-Auto" switches shall be provided for automatically controlled apparatus.

H. Motor starters that are not an integral part of HVAC equipment shall be installed in conformance with Division 16 - Electrical requirements.

I. Electrical power wiring to disconnects, starters, motors and similar devices shall be provided under the Electrical Section. All equipment requiring electrical power shall be installed with disconnect switches at each piece of equipment. Coordinate switch type (fused or non-fused) with equipment characteristics, manufacturer's recommendations and electrical drawings.

J. The Contractor shall provide all system controls, control and interlock wiring 120 volts and less in conduits and in accordance with materials and installation requirements of Division 16 – Electrical.

K. All starters shall be labeled on the face of the starter with a semi-rigid plastic laminate nameplate with 1" high white letters on a black background securely affixed to the equipment. The label shall indicate equipment served by the starter

(equipment tag used on the Drawings). Labels shall be furnished and installed by the Contractor.

L. All starters for 3-phase equipment shall have overload devices in each phase.

M. Wiring diagrams shall be furnished by the Contractor.

N. Acceptable manufacturers shall be General Electric, Square D, Cutler-Hammer, Siemens and Allen Bradley.

PART 3 - EXECUTION

3.01 GENERAL

A. All equipment and materials shall be completely installed, adjusted, and fully operational with all accessories and connections.

B. Equipment, piping, ductwork, etc. shall fit into the spaces provided in the building and shall be installed at such time and in such a manner as to avoid damage and as required by the job progress. The Contractor shall coordinate work with other trades and locate work described herein to avoid interferences with structural, electrical and architectural work. Equipment, accessories and similar items requiring normal servicing or maintenance shall be accessible.

C. The Engineer reserves the right to direct the removal of any item which, in his opinion, does not present an orderly and reasonably neat or workmanlike appearance. Such removal and replacement shall be done when directed by the Engineer and without additional cost to the Owner.

D. Listed mounting heights are to the finished bottom of the device unless otherwise noted.

E. All work shall be designed and installed to comply with the requirements for the seismic design category and use group for the area in which the building is constructed.

3.02 STORAGE AND PROTECTION OF MATERIALS

A. During construction, all equipment shall be properly protected against damage, defacing and freezing with shipping cartons, plastic sheeting, shipping covers, etc.

B. All open ends of piping and equipment shall be sealed with nipples and caps, plugs, and test plugs until final connection to system is made.

C. All equipment, piping and ductwork shall be protected to prevent entrance of foreign matter and debris by covering exposed openings during construction.

D. Handle and store materials in accordance with manufacturer's and supplier's recommendations and in a manner to prevent damage to materials during storage and handling. Replace damaged materials.

E. Equipment and materials shall not be installed until such time as the environmental conditions of the job site are suitable to protect the equipment or materials. Equipment or materials damaged or which are subjected to these elements are unacceptable and shall be removed from the premises and replaced.

3.03 CUTTING AND PATCHING

A. The work shall include all cutting and patching required as part of the HVAC installation. Refer to Division 1 – General Requirements.

3.04 CONCRETE WORK

A. Construct curbs, pads and similar supports for equipment where required.

B. Provide 4" thick housekeeping pads for all floor mounted equipment, extending 6" beyond the area occupied by the equipment. Dowel pads to structural slab.

C. Perform concrete work in accordance with applicable portions of Division 3 - Concrete. Minimum compressive strength of concrete shall be same as specified for slabs on grade.

D. Mix and install grout for HVAC equipment base bearing surfaces and anchors. Provide forms as necessary and place grout to completely fill equipment bases.

3.05 EQUIPMENT SUPPORTS

A. Major equipment supports (structural steel frames, framed structural slab and wall openings, etc.) shall be furnished and installed by others; however, the HVAC work shall include furnishing and installation of all miscellaneous equipment supports, structural members, rods, clamps and hangers required to provide adequate support of all HVAC equipment.

B. Unless otherwise shown on the Drawings, all HVAC equipment, piping, and accessories shall be installed level, square, and plumb.

C. All equipment, piping, etc. supported by structural bar joists shall be supported only by the top chord of the joists. Hangers shall not be attached to the bottom chord of any joists.

3.06 PIPE AND DUCTWORK PENETRATIONS

A. Sleeves shall be installed in all masonry or concrete walls, floors, roofs, etc. for pipe and ductwork penetrations. Sleeves for pipe shall be schedule 40 black steel. Sleeves for ductwork shall be 20-gauge galvanized steel. Sleeves shall be sized to provide a minimum of 1/4" clearance between the sleeve and pipe or duct. For insulated pipes or ducts, the clearance shall be between the sleeve and the insulation.

B. As far as possible, all pipe and ductwork penetrations shall be provided for at the time of masonry or concrete construction. Where drilling is required, only core drills shall be used. Star drills shall not be used.

C. All pipes penetrating walls or floors of any construction shall be installed with escutcheon plates on both sides of the penetration securely fastened to the wall or floor. In exposed areas, escutcheon plates shall be chrome plated. All escutcheon plates shall be sized to completely conceal the penetration.

D. Ductwork penetrating walls or floors of any material shall be installed with closure plates on both sides of the penetration. Pipe penetrations through exterior walls shall be sealed weather-tight with expandable link type seals by Thunderline, Linkseal, or Engineer approved equal.

E. All pipe and duct penetrations of fire, smoke, or fire and smoke-rated assemblies shall be fire-stopped as required to retain the integrity of the UL-rated assembly. Fire barrier products shall be as manufactured by Tremco, Hilti, 3M, Metacaulk, Nelson, or approved equal. Refer to Division 7 - Thermal and Moisture Protection.

3.07 FLASHING

A. All piping and ductwork penetrating roofs shall be flashed in an approved manner, shall be watertight, and shall conform to the requirements detailed in Division 7 – Thermal and Moisture Protection.

3.08 EQUIPMENT LABELING

A. All HVAC equipment shall be labeled. This shall include all central plant, air handling or air conditioning equipment, air terminals, and other similar and miscellaneous equipment.

B. Labels for air terminals or other devices shall be located for optimum visibility through access panel or removed ceiling tiles.

C. Equipment labeling shall be one of the following, unless noted or specified otherwise:

1. Permanently attached plastic laminated signs with 1" high lettering
2. Stencil painted identification, 2" high letters, with standard fiberboard stencils and standard black (or other appropriate color) exterior stencil enamel

3.09 VALVE TAGS

A. Each valve in the HVAC system is to be provided with an individually numbered valve tag.

B. Valve tags are to be brass or plastic laminate, 1-1/2" minimum diameter with brass chain and hook for securing to the valve.

C. Valve tags will include a designation to indicate the appropriate system. Numbering shall be consecutive for each service of the hot, chilled, steam, condensate return, or condenser water systems.

D. A printed list or schematic drawing shall be compiled for each system indicating the location and detailed description of the system or equipment served.

E. One (1) copy of each list shall be framed and mounted at the location designated by the Building Engineer. An additional copy of each list is to be included in the Operations and Maintenance Manual.

3.10 CLEANING

A. At all times, the premises shall be kept reasonably clean and free of undue amounts of waste, trash and debris by periodic cleaning and removal. After completion, all foreign material, trash and other debris shall be removed from the job site.

B. After all equipment has been installed, but prior to testing and balancing, all equipment, piping, ductwork, etc. shall be thoroughly cleaned both inside and out.

C. All water piping shall be chemically flushed and cleaned prior to circulating water through equipment.

D. After cleaning, filters shall be installed where required and all systems shall be tested and balanced.

E. After testing and balancing and just prior to Owner review and acceptance, all systems shall be finally cleaned and left ready for use.

3.11 PAINTING

A. Painting will be done under Division 9 – Painting except as otherwise noted, but the HVAC Contractor shall leave all surfaces of work free of rust, dirt and grease.

B. The HVAC Contractor shall touch-up any equipment scratched in shipment or during installation to match original finish. Touch-up painting of HVAC equipment shall be part of the HVAC work.

C. Any visible ductwork through grilles, registers and diffusers shall be painted flat black.

D. Provide one coat of rust preventive primer on all new structural steel supports and new ferrous surfaces not galvanized, including HVAC piping. Rust preventive painting shall be part of the HVAC work. Rust preventive paint shall be "Rust Destroyer" by Advanced Protective Products, Inc., Fairlawn, NJ, (201) 794-2000. Product shall have a 5-year warranty when applied directly over rust. Clean and prepare surface per manufacturer's recommendations.

E. All painting and coating shall match the original finish and shall conform to the requirements detailed in Division 9 - Finishes.

F. Do not paint over equipment nameplates, nonferrous hardware, accessories or trim.

3.12 PRESSURE TESTING

A. Unless otherwise specified herein, all HVAC piping shall be tested as required by Code to 1-1/2 times the rated system pressure or 100 psig, whichever is greater. Care shall be taken to isolate all equipment not suitable for this test pressure by installing pipe caps or blank flanges at the equipment connections. All valves and fittings shall be tested under pressure.

3.13 PERFORMANCE AND DEMONSTRATION TESTS

A. All testing and demonstration of any and all HVAC systems required for acceptance by any authorities having jurisdiction shall be included as part of the HVAC work. This shall include the furnishing of any and all testing equipment,

smoke generation devices, and any other required equipment or accessories, and all necessary labor required to perform any required tests or demonstrations. The Contractor shall coordinate and verify all devices, equipment and sequence of testing and/or events with such authorities having jurisdiction. The Contractor shall perform a minimum of two (2) satisfactory preliminary tests or demonstrations prior to any formal tests and/or demonstrations for any code authorities, and shall give a minimum of five (5) days advance notice to the Engineer of any and all preliminary tests and/or demonstrations, indicating the date and time of such tests.

3.14 TRAINING

A. Upon completion of the work, the Contractor shall conduct operation and training session(s) for the Owner's key operating personnel. These sessions shall be of sufficient length and duration to adequately explain the design intent and proper operating and maintenance techniques for all HVAC equipment and systems. After these sessions are completed, the Contractor shall provide a copy of a signed statement by the Owner that his personnel are thoroughly familiar with and capable of operating all HVAC equipment and systems.

END OF SECTION

SECTION 15010

HVAC DEMOLITION, ADDITIONS & RENOVATIONS

PART 1 - GENERAL

1.01 DESCRIPTION

A. Refer to specification section 15000 - HVAC General, all of which applies to work described in this section as if written in full herein.

B. Furnish all labor, equipment, materials and incidentals required to remove and/or make-safe the existing equipment, pipe, fittings, valves and appurtenances indicated on the Drawings, and not required for the proper operation of the new HVAC system. Removal will be consistent with the final configuration of the new systems as indicated and as required by the Architect. The equipment and piping identified shall be removed from their present locations and shall be removed from the site or stored as specified hereinafter.

C. Perform all work required to tie-in the new work to the existing systems and to adapt the existing systems to the new work. Refer to the Engineer's Drawings for the intended final HVAC system configuration.

D. Before removal of any electrically operated equipment, coordinate carefully to assure that power and control wiring has been disconnected and/or locked out, tagged out and made-safe.

E. It should be noted that some HVAC systems are to remain. If any of these systems are damaged during the progress of construction or demolition, they shall be repaired or replaced to the satisfaction of the Architect without incurring additions to the Contract.

PART 2 - PRODUCTS - Not Applicable

PART 3 - EXECUTION

3.01 GENERAL

A. Prior to the ordering or purchasing of any equipment or materials or the layout or installation of any new work, the Contractor shall examine the premises and verify any and all of the existing conditions under which he will be obliged to operate, or that will in any manner affect the work under this Contract.

B. Unless specifically noted to be removed, existing equipment, piping, ductwork, etc. is to remain. Any equipment, piping or appurtenances removed which are necessary for the operation of the existing system shall be replaced to the satisfaction of the Architect without incurring additions to the Contract.

C. When encountered in work, protect, brace, and support existing, active services as necessary for proper execution of the work. Relocate existing, active services encountered as necessary or as shown on the Contract Documents. Do not prevent or disturb operation of active services that are to remain. Notify all utility companies or municipal agencies having jurisdiction prior to modifying services.

D. Where work makes temporary shut down of services unavoidable, shut down at night or at such times as approved by the Owner, which will cause the least interference with scheduled operations. Arrange work to assure that services will be shut down only during time actually required to make the connection to the existing work.

E. All ductwork, pipe, fittings, tubing, insulation, hangers and supports, etc. that are demolished or damaged shall become the property of the Contractor upon removal. The materials shall be removed immediately from the site and shall not be reused.

F. Any existing property damaged by the Contractor while performing any work shall be replaced with new materials to match existing conditions; however, any existing insulation that is damaged shall be replaced as specified for new insulation.

G. Wherever piping is removed for disposition, adjacent pipe and headers that are to remain in service shall be blanked off or plugged and then anchored in an approved manner. Piping passing through floors that is to be removed shall be cut or ground flush with the floor and filled with grout flush with adjacent floor.

H. Equipment to be retained by the Owner shall be carefully removed from the present location, cleaned, packaged and immediately stored at a place on-site as designated by the Owner.

I. The Contractor shall take all necessary precautions against damaging the material and equipment to be stored. The Contractor shall repair all damage resulting from his operations, as directed by and to the satisfaction of the Architect. Itemized lists of materials removed and stored shall be recorded and submitted to the Owner at the completion of construction. The list shall include a physical description of all items, how they are packaged and where they are stored.

J. Where work under this project requires extension, relocation, reconnection or modifications to existing equipment or systems, the existing equipment or systems shall be restored to their original and operating condition.

K. Where pipes, control devices and wiring which are to remain in service, but are disconnected for the removal or relocation of equipment or because of building alterations, they shall be reconnected.

L. All thermostats and temperature sensors that are to remain in service shall be removed and stored in a safe place or covered in plastic and protected from construction/demolition. Prior to construction, catalog all existing thermostats to be reused and verify proper operation. Notify the Architect at this time of any inoperable thermostats. Any thermostats damaged or found to be inoperable at turnover shall be replaced by the Contractor at no additional cost.

END OF SECTION

SECTION 15020

DUCTWORK AND ACCESSORIES

PART 1 - GENERAL

1.01 DESCRIPTION

A. All work in this section shall be subject to the provisions of Section 15000 - HVAC General.

B. Furnish and install all material, labor, accessories, etc. shown on the Drawings and as specified herein to completely install all ductwork systems.

C. Ductwork systems shall be classified as follows:

1. Static pressure class +2" W.G. - from constant volume air handling unit, and terminal unit to supply diffusers, and all return and exhaust ductwork
2. Static pressure class +6" W.G. - from VAV air handling unit to PIU/VAV

D. Ductwork shall be constructed according to the latest edition of SMACNA ductwork construction standards applicable to the system pressures described above, and the system material construction.

E. Duct sizes shown on the Drawings are nominal inside clear.

PART 2 - PRODUCTS

2.01 DUCTWORK

A. All ductwork shall be constructed of galvanized steel sheets of the thickness listed in the SMACNA manuals for the pressures referenced above, or of 1" thick (1-1/2" thick if required by the applicable energy code) resin bonded fiberglass with fire resistant foil-scrim-kraft vapor barrier.

2.02 FIRE DAMPERS

A. Type B or C fire dampers with the blade stack out of the airstream shall be installed at all locations where ductwork penetrates any floor, wall or partition with a fire rating of 1 hour or more and where otherwise shown on the Drawings. Fire dampers shall have a rating compatible with the floor, wall or partition, and shall be UL 555 rated. Type A fire dampers with the blade stack in the airstream may be used behind grilles or where space conditions do not permit the use of a Type B damper.

B. All fire dampers shall be of the "Dynamic" type as classified in UL Standard 555.

C. Slab, Wall and Partition Dampers

1. Dampers shall be factory built curtain type. They shall conform to the requirements of NFPA Standard 90 and be UL Labeled for the required rating (1-1/2 hour minimum).
2. Provide factory built sleeves of design and length to permit mounting within the opening.
3. All dampers shall be installed in strict accordance with the manufacturer's UL Approved installation.
4. Where fire dampers are shown on the Drawings, and if fiberglass ductwork is used, dampers shall be installed in sheet metal duct extending on both sides of the partition as required by governing code authorities.

2.03 FLEX DUCT CONNECTORS

A. Install flex duct connectors at connections of sheet metal duct to motor driven equipment, or otherwise noted. Flex duct connectors shall be glass fabric coated with neoprene, suitable for service. Install per manufacturer's instructions, and support sheet metal ductwork so that no weight is supported by flex duct connector.

B. Flex duct connectors shall also be provided at building expansion joints.

2.04 ACCESS DOORS

A. Hinged, gasketed and latched access doors and/or panels shall be installed at each fire and smoke damper, each duct mounted smoke detector, each valve, at each duct mounted balancing damper or any other HVAC equipment or device that requires accessibility. Doors and panels shall be sized and located to optimize access to dampers, detectors, and other equipment for service and replacement. Access doors in ductwork shall be per SMACNA Standards. Access doors and panels in walls, ceilings or other surfaces shall be coordinated with architectural finishes, and shall be as manufactured by Cesco Products.

2.05 AUTOMATIC CONTROL DAMPERS

A. Automatic control dampers shall be installed as shown on the Drawings and shall be controlled as described in the 15150 - Automatic Controls section of these specifications.

B. Dampers shall be of the opposed blade type constructed of minimum 18-gauge galvanized steel and shall have rigidly constructed blades less than 6" wide, and

shall have duct mounting flanges.

C. Dampers shall be of the low leakage type with replaceable blade and jamb seals. Damper leakage shall not exceed 6 cfm per sq. ft. of damper area at 4 in. w.c.

PART 3 - EXECUTION

3.01 DUCTWORK

A. All ductwork shall be installed in accordance with applicable SMACNA Standards according to the pressure class described in PART 1 - GENERAL.

B. Ductwork shall be supported as recommended by SMACNA Standards from structural members. Ductwork shall not be allowed to rest on ceilings, light fixtures or structural members. Ductwork supported from joists shall be supported from the top chord of all joists.

C. All ductwork accessories shall be installed in strict accordance with manufacturer's recommendations.

D. All ductwork shall be leak tested in accordance with SMACNA Standards. All ductwork seams shall be sealed with mastic to provide a system that is within the allowable SMACNA leakage limits. Six (6) copies of the ductwork test report shall be submitted to the Engineer prior to the Contractor's request for final payment.

E. All ductwork shall be cleaned inside and out prior to system start up, and shall be left in a neat and orderly manner.

F. Ducts, unless otherwise approved, shall be true to dimensions indicated, straight and smooth on inside with neatly finished joints; securely anchor to building in an approved manner, and install to be completely free from vibration under all conditions of operation. Exact routing of ductwork will be dependent on location of framing members. Route duct to avoid cutting framing members. Duct sizes shown on the Drawings are inside clear dimensions.

G. Brace ducts not more than 60 inches on center. Make slip joints in direction of flow. Unless otherwise indicated, elbows shall have a centerline radius of not less than 1 ½ times the width of the duct. Where space limitations necessitate use of short radius or square elbows, install turning vanes. Offset ducts around obstructions where possible. Where duct must encompass obstruction, area of duct shall remain constant. Duct tapers shall not exceed 1:4 ratio and transformations 30 degrees between air flow and diverging or converging air flow. Provide access doors for access to all equipment, dampers and motors concealed by sheet metal.

3.02 DAMPERS

A. Install dampers where indicated on the Drawings. Provide friction damper behind face of each supply outlet which shall be adjustable through the face of the grille with a screwdriver.

END OF SECTION

SECTION 15030

LOUVERS

PART 1 - GENERAL

1.01 DESCRIPTION

A. Furnish and install all louvers, grilles, registers and diffusers of the size, type, capacity, and characteristics as shown on the equipment schedules and described herein.

B. Equipment schedules and specifications are based on the one manufacturer listed in the schedule. Other manufacturers of equal quality and performance may be submitted to the Engineer for review. When substitution of equipment is made, the Contractor shall be responsible for the costs of any item and engineering and construction revisions necessary in his or any other contract or trade that may be required to satisfy plans and specifications.

PART 2 - PRODUCTS

2.01 LOUVERS

A. Louver components (heads, jambs, sills, blades, etc.) shall be factory assembled by the manufacturer into a complete unit. Louver sizes too large for shipping shall be built-up by the Contractor from factory assembled louver sections to provide the overall sizes required.

B. Louver design shall incorporate structural supports required to withstand a wind load of 20 lbs. per square foot.

C. All louver performance data submitted for approval shall bear the AMCA Certified Ratings Seal for Air Performance and Water Penetration.

D. All louvers shall have a standard factory applied finish coating with color selection made by the Architect at the time of shop drawing approval. Color charts shall be submitted with louver shop drawings.

PART 3 - EXECUTION

3.01 LOUVERS

A. Louvers shall be installed according to manufacturer's recommendations, and shall be caulked and sealed at the frame and flanges to make the installation

weatherproof.

B. Combination louver dampers shall be installed with required damper operators and linkage mechanisms and shall be field adjusted for full opening/closure stroke. Louvers shall be interlocked as indicated on the Drawings.

END OF SECTION

SECTION 15035

PUMPS

PART 1 - GENERAL

1.01 DESCRIPTION OF WORK

A. Furnish and install all pumps of the size, type, capacity and characteristics as shown on the equipment schedules and described herein.

B. Equipment schedules and specifications are based on the one manufacturer listed in the schedule. Other manufacturers of equal quality and performance may be submitted to the Engineer for review. When substitution of equipment is made, the Contractor shall be responsible for the costs of any item and engineering and construction revisions necessary in his or any other contract or trade that may be required to satisfy plans and specifications.

1.02 QUALITY ASSURANCE

A. Manufacturers: Firm regularly engaged in manufacturer of general-use centrifugal pumps with characteristics, pipe sizes and capacities required, whose products have been in satisfactory use in similar service for not less than five (5) years.

B. Manufacturers: Provide products produced by Bell & Gossett, Taco, Armstrong, Aurora or equal.

C. Electrical Standards: Provide electrical motors and products which have been Listed and Labeled by Underwriters Laboratories Inc. and comply with NEMA Standards.

D. Certification, Pump Performance: Provide pumps whose performance, under specified conditions, is certified by the manufacturer.

1.03 SUBMITTALS

A. Submit manufacturer's data on pumps including but not limited to, pump characteristic performance curves, certified where indicated.

1.04 PRODUCT DELIVERY, STORAGE AND HANDLING

A. Deliver and store pump products in factory-wrapped packages which properly protect pumps against weather, dirt and damage.

B. Handle pumps carefully to avoid damage to motors, components, enclosures and finish. Do not install damaged units; replace and return damaged units to pump manufacturer.

PART 2 - PRODUCTS

2.01 PUMPS

A. Provide electrical motor driven, split case, volute type centrifugal pumps where indicated; base-mounted with single piece base. Equip with Class B insulated, quiet, drip-proof, ball bearing type motor of rotation speed, HP rating and power characteristics indicated (1750 RPM if not otherwise indicated); factory align and couple motor to pump. Provide pump rated for capacity, pressure and suction/discharge heads indicated. Equip pump with dynamically balanced, end suction enclosed type impeller, locked to pump shaft. Provide pump shaft with mechanical assembly, rotary type seal rated for water temperature of 250 degrees F. Connect pump to motor with flexible self-aligning coupling or close couple. Equip pump with sleeve bearings and force-feed lubrication system; and protect pump shaft internally with bronze sleeves. Provide bearing bracket assemblies of the type which can be removed without disturbing piping or motor. Impellers to be of non-overloading type so motor nameplate HP will not be exceeded at any point on the pump curve. The diameter of the impeller shall not exceed 85% of casing accommodation. Casings shall have drilled and tapped vent, drain and gauge openings.

2.02 MOTORS

A. Motors shall be heavy duty, high efficiency open drip proof unless otherwise specified. Motors shall meet Table MG-1-12C of EPACT ‘92.

B. Motors controlled by an adjustable frequency drive shall be compatible with the particular manufacturer’s drive that is used.

PART 3 - EXECUTION

3.01 INSPECTION

A. Installer must examine conditions under which pumps are to be installed and notify the Contractor in writing of conditions detrimental to proper and timely completion of work. Do not proceed with the work until unsatisfactory conditions have been corrected in a manner acceptable to installer.

3.02 INSTALLATION OF PUMPS

A. Install pumps where shown in accordance with manufacturer's written instructions, and with recognized industry practices, to ensure that pumps comply with requirements and serve intended purposes. Comply with NEMA Standards and requirements of NEC.

B. Coordinate with other work (piping) as necessary to interface installation of pumps with piping and other components of water system.

C. Check alignment and, where necessary (and possible), realign shafts of motors and pumps within tolerances recommended by manufacturer.

D. Install units on pad mounts as shown; comply with manufacturer's indicated installation method, if any, and with Division 15 sections.

3.03 ELECTRICAL CONNECTIONS

A. Ensure that pump units are wired properly, with rotation in direction indicated and intended for proper pump performance.

B. Provide positive electrical pump and motor grounding.

3.04 FIELD QUALITY CONTROL

A. Upon completion of installation of pump, and after motor has been energized with normal power source, bleed air from pump casing and test pump to demonstrate compliance with requirements. When possible, field correct malfunctioning units, then retest to demonstrate compliance. Replace units which cannot be satisfactorily corrected.

END OF SECTION

SECTION 15050

GAS FIRED HOT WATER BOILER (HIGH EFFICIENCY)

PART 1 - GENERAL

1.01 DESCRIPTION OF WORK

A. The gas fired boiler shall be provided as indicated on the drawings and by the requirements of this section.

B. Scope of work shall include the furnishing and complete installation of the equipment covered by this section, with all auxiliaries, ready for Owner's use.

1.02 QUALITY ASSURANCE

A. Electrical Standards: Provide electrical motors and products which have been Listed and Labeled by Underwriters Laboratories Inc. and comply with NEMA Standards.

B. Certification, gas fired heating equipment performance: Provide boilers whose design and performance, under specified conditions, is certified by the American Gas Association (AGA) and the manufacturer and bear the AGA Label.

PART 2 - PRODUCTS

2.01 HOT WATER BOILER

A. Boiler shall be natural gas-fired tube type with capacity as shown on Dwgs.

B. The Boiler shall be capable of full modulation firing down to 10% of rated input with a turndown ratio of 5:1.

C. Boiler shall be AGA certified. Burners shall be fan assisted with variable speed blower for control over fuel/air mixture.

D. Heat exchanger tubes shall be cleanable, 316L stainless steel. The Boiler shall bear the ASME "H" stamp for 160 psi working pressure and shall be National Board listed.

E. Combustion chamber shall be insulated with a lightweight cast refractory backed up with fiberglass insulation.

F. Boiler jacket shall be heavy-gauge galvanized (or equal) steel with factory-applied baked enamel.

G. Boiler controls shall be provided with a 110 to 24 volt transformer. The main gas valve shall be 24 volts.

H. The combustion chamber shall be designed to drain condensation to the bottom of the heat exchanger assembly including a condensate trap. The complete heat exchanger assembly shall carry a ten (10) year limited warranty.

I. The Boiler shall be certified and listed by C.S.A. International under the latest edition of the harmonized ANSI Z21.13 test standard for the U.S. and Canada.

J. The Boiler shall comply with the energy efficiency requirements of the latest edition of the ASHRAE 90.1 Standard and the minimum efficiency requirements of the latest edition of the ASHRAE 103 Standard.

K. The Boiler shall operate at a minimum of 94% thermal efficiency at full fire on 1,000,000, 1,300,000 and 1,500,000 Btu/hr models. All models shall operate up to 98% thermal efficiency with return water temperatures at 90°F or below. The Boiler shall be certified for indoor installation.

L. Provide a low-water cutoff to shut the burner off if the heater is not completely full of water.

M. Provide a flow switch, or pressure differential switch, to prove water flow before the controls can be energized.

N. The Boiler shall utilize a 24 VAC control circuit and components. The control system shall have a Liquid Crystal touch screen display for boiler set-up, boiler status, and boiler diagnostics. The Boiler shall be equipped with a temperature/pressure gauge; high limit temperature control with manual reset; ASME certified pressure relief valve; outlet water temperature sensor; return water temperature sensor; outdoor air sensor, flue temperature sensor; high and low gas pressure switches, low water cut off with manual reset and a condensate trap for the heat exchanger condensate drain.

O. The boiler shall have contacts for any failures, runtime contacts and data logging of runtime, ignition attempts and failures. The boiler shall allow 0-10 VDC input connection for BMS control and have built-in “Cascade” to sequence and rotate while maintaining modulation of up to eight boilers without utilization of an external controller. The control may be compatible with optional Modbus communication.

P. The Boiler shall be equipped with two terminal strips for electrical connection. A

low voltage connection board with 30 data points for safety and operating controls, i.e., Alarm Contacts, Runtime Contacts, Louver Proving Switch, two Flow Switches, Tank Thermostat, Remote Enable/Disable (Wall Thermostat/Zone Control), System Supply Sensor, Outdoor Sensor, Tank Sensor, Modbus Building Management System signal and Cascade control circuit. A high voltage terminal strip shall be provided for Supply voltage. Supply voltage shall be 120 volt / 60 hertz / single phase. The high voltage terminal strip plus integral relays are provided for independent pump control of the System pump, the Boiler pump and the Hot Water pump.

Q. The Boiler shall be installed and vented with a Direct Vent system with vertical roof top termination of both the exhaust vent and combustion air. The flue shall be Category IV approved Stainless Steel, PVC or CPVC sealed vent material terminating at the rooftop with the manufacturers specified vent termination. A separate pipe shall supply combustion air directly to the boiler from the outside. The air inlet pipe may be PVC or CPVC sealed pipe. The boiler's total combined air intake length shall not exceed 100 equivalent feet. The boiler's total combined exhaust venting length shall not exceed 100 equivalent feet. The air inlet must terminate on the rooftop with the exhaust. Foam Core pipe is not an approved material for exhaust piping.

R. The Boiler shall have an independent laboratory rating for Oxides of Nitrogen (NOx) of 30 ppm or less corrected to 3% O2. The manufacturer shall verify proper operation of the burner, all controls and the heat exchanger by connection to water and venting for a factory fire test prior to shipping.

PART 3 - EXECUTION

3.01 AUXILIARY EQUIPMENT

A. Provide high pressure gas regulator, or additional gas regulators which have been Listed and Labeled by Underwriters Laboratories Inc. and comply with NEMA Standards.

B. Certification, gas fired heating equipment performance: Provide boilers whose design and performance, under specified conditions, is certified by the American Gas Association (AGA) and the manufacturer and bear the AGA Label.

3.02 TEST

A. Observe the ignition of the pilot and the main burner to make sure they are smooth and complete.

B. Check out the safety controls and verify that they are functioning properly. Report the actual and design pressure drop through the boiler.

C. Set the operating controls for the proper temperature.

D. Operate the boiler for no less than 2 hours, or return at the beginning of the heating season for completion of this test.

E. Provide a written report that ignition is proper, safety controls have been checked, and operating controls are set and functioning properly. Report the actual and design pressure drop through the boiler.

3.03 OWNER'S INSTRUCTIONS

A. Provide the Owner's operator with three (3) copies of written instructions for operation and maintenance of the system.

END OF SECTION

.

SECTION 15051

NOISE AND VIBRATION CONTROL

PART 1 - GENERAL

1.01 DESCRIPTION

A. Furnish and install vibration control devices, materials, and related items. Perform all work as shown on the Drawings and as specified herein to provide complete vibration isolation systems in proper working order.

1.02 MATERIAL AND EQUIPMENT

A. Vibration isolation mounts shall be supplied by one of the following approved manufacturers:

1.	Amber/Booth Co. (Houston, TX)	A.B.
2.	Mason Industries, Inc. (Hauppauge, NY)	M.I.
3.	Kinetics Noise Control, Inc. (Dublin, OH)	K.N.C.
4.	Vibration Eliminator Co., Inc. (Copiague, NY)	V.E.
5.	Vibration Mountings & Controls, Inc. (Butler, NJ)	V.M.&C

B. Unless otherwise specified, supply only new equipment, parts and materials.

C. Substitutions of equal equipment beyond the alternatives listed will be permitted only with the written permission of the Architect. Accompany each request for acceptance of substitute equipment with manufacturer's certified data proving the equivalence of the proposed substitute in quality and performance. The Architect shall be the final judge of the validity of the data submitted.

D. Unless otherwise approved by the Architect, field-installed vibration isolation equipment shall be furnished by a single manufacturer or his authorized representative, who shall also be responsible for all work specified in this section to be performed by the manufacturer.

1.03 REQUESTS FOR CHANGE

A. Any requests for changes to the specifications must be submitted in writing at least ten (10) days prior to bid closing. Approval will be given through a written addendum.

1.04 QUALITY ASSURANCE

A. Coordinate the size, location, and special requirements of vibration isolation equipment and systems with other trades. Coordinate plan dimensions with size of housekeeping pads.

B. Provide vibration isolators of the appropriate sizes, with the proper loading to meet the specified deflection requirements.

C. Supply and install any incidental materials such as mounting brackets, attachments and other accessories as may be needed to meet the requirements stated herein, even if not expressly specified or shown on the Drawings, without claim for additional payment.

D. Verify correctness of equipment model numbers and conformance of each component with manufacturer's specifications.

E. Should any rotating equipment cause excessive noise or vibration when properly installed on the specified isolators, the Contractor shall be responsible for rebalancing, realignment, or other remedial work required reducing noise and vibration levels. Excessive is defined as exceeding the manufacturer's specifications for the unit in question.

F. Upon completion of the work, the Architect or Architect's representative shall inspect the installation and shall inform the installing contractor of any further work that must be completed. Make all adjustments as directed by the Architect that result from the final inspection. This work shall be done before vibration isolation systems are accepted.

1.05 SUBMITTALS

A. Refer to related sections elsewhere for procedural instructions for submittals.

B. Before ordering any products, submit shop drawings of the items listed below. The shop drawings must be complete when submitted and must be presented in a clear, easily understood form. Incomplete or unclear presentation of shop drawings may be reason for rejection.

1. A complete description of products to be supplied, including product data, dimensions, specifications, and installation instructions.
2. Detailed selection data for each vibration isolator supporting equipment, including:
   a. The equipment identification mark;
   b. The isolator type;
   c. The actual load;

d. The static deflection expected under the actual load;
e. The specified minimum static deflection.

3. Steel rails, steel base frames, and concrete inertia bases showing all steel work, reinforcing, vibration isolator mounting attachment method, and location of equipment attachment bolts.
4. Special details necessary to convey complete understanding of the work to be performed.

C. Submission of samples may be requested for each type of vibration isolation device. After approval, samples will be returned for installation at the job if requested. All costs associated with submission of samples shall be borne by the Contractor.

1.06 DESIGN REQUIREMENTS

A. Design isolators for equipment installed outdoors to provide adequate restraint to withstand the force as required by code to any exposed surface of the isolated equipment. Isolators for outdoor equipment shall have bolt holes for attachment to equipment and to supports. The vibration isolation Vendor shall submit verifying shear and over turning calculations, for their product and equipment installation arrangement, stamped by a licensed Professional Engineer. The design and supply of miscellaneous support steel above and below isolators will not be the responsibility of the vibration isolation manufacturer.

PART 2- PRODUCTS

2.01 VIBRATION ISOLATOR TYPES

A. General

1. All metal parts installed out-of-doors shall be corrosion resistant after fabrication. Galvanizing shall meet ASTM Salt Spray Test Standards and Federal Test Standard No. 14.
2. Isolators installed out-of-doors shall have base plates with bolt holes for fastening the isolators to the support members.
3. Isolator types are scheduled to establish minimum standards. At the Contractor's option, labor-saving accessories can be an integral part of isolators supplied to provide initial lift of equipment to operating height, hold piping at fixed elevations during installation and initial system filling operations, and similar installation advantages. Accessories and seismic restraint features must not degrade the isolation performance of the isolators.
4. Static deflection of isolators shall be as provided in the EXECUTION section and as shown on the Drawings. All static deflections stated are the minimum acceptable deflection for the mounts under actual load. Isolators

selected solely on the basis of rated deflections are not acceptable and will be disapproved.

B. Type FSN (Floor Spring and Neoprene)

1. FSN isolators shall be freestanding and laterally stable without any housing. Spring diameter shall be not less than 0.8 of the compressed height of the spring at the rated load. Springs shall have a minimum additional travel-to-solid equal to 50% of the rated deflection. Springs shall be so designed that the ratio of horizontal stiffness to vertical stiffness is approximately 1. Mounts shall have leveling bolts.
2. The spring element in the isolator shall be set in a neoprene cup and have a steel washer or a flat surface in contact with the neoprene to distribute the load evenly over the bearing surface of the neoprene. Alternatively, each isolator shall be mounted on a Type NP isolator. If the NP isolator is used, a rectangular bearing plate of appropriate size shall be provided to load the pad uniformly within the manufacturer's recommended range. If the isolator is to be fastened to the building and the NP isolator is used, the holes in the isolator base plate shall be oversized and GROMMETS shall be provided for each base plate bolt hole.
3. If the basic spring isolator has a neoprene friction pad on its base and an NP isolator is to be added to the base, a galvanized steel, stainless steel or aluminum bearing plate shall be used between the friction pad and the NP isolator. If the isolator is outdoors, bearing plates shall not be made of galvanized steel. The NP isolator, bearing plate and friction pad shall be permanently adhered to one another and to the bottom of the isolator base plate.
4. Type FSN isolators shall be one of the following products with the appropriate neoprene pad (if used) selected from Type NP or approved equal:

a.	Type SW	A.B.
b.	Type SLF	M.I.
c.	Type FDS	K.N.C.
d.	Type OST	V.E.
e.	Series AC	V.M.&C.

C. Type FSNTL (Floor Spring and Neoprene Travel Limited)

1. FSNTL isolators shall be freestanding and laterally stable without any housing. Spring diameter shall be not less than 0.8 of the compressed height of the spring at the rated load. Spring shall have a minimum additional travel-to-solid equal to 50% of the rated deflection. Springs shall be so designed that the ratio of horizontal stiffness to vertical stiffness is approximately 1. Mounts shall have leveling bolts. Mounts shall have vertical travel limit stops to control extension when weight is

removed. The travel limit stops shall be capable of serving as blocking during erection of the equipment. A minimum clearance of 1/4" shall be maintained around restraining bolts and between the limit stops and the spring to avoid interference with the spring action.

2. The spring element in the isolator shall be set in a neoprene cup and have a steel washer or a flat surface in contact with the neoprene to distribute the load evenly over the bearing surface of the neoprene. Alternatively, each isolator shall be mounted on a Type NP isolator. If the NP isolator is used, a rectangular bearing plate of appropriate size shall be provided to load the pad uniformly within the manufacturer's recommended range. If the isolator is to be fastened to the building and the NP isolator is used, the holes in the isolator base plate shall be oversized and GROMMETS shall be provided for each base plate bolt hole.
3. If the basic spring isolator has a neoprene friction pad on its base and an NP isolator is to be added to the base, a galvanized steel, stainless steel or aluminum bearing plate shall be used between the friction pad and the NP isolator. If the isolator is outdoors, bearing plates shall not be made of galvanized steel. The NP isolator, bearing plate and friction pad shall be permanently adhered to one another and to the bottom of the isolator base plate.
4. Type FSNTL isolators shall be one of the following products, with the appropriate neoprene pad (if used) selected from Type NP or approved equal:

a.	Type CT	A.B.
b.	Type SLR	M.I.
c.	Type FLS	K.N.C.
d.	Type KW	V.E.
e.	Series AWR	V.M.&C.

D. Type FN (Floor Neoprene)

1. NP isolators shall be neoprene-in-shear type with steel reinforced top and base. All metal surfaces shall be covered with neoprene. The top and bottom surfaces shall be ribbed. Bolt holes shall be provided in the base and the top shall have a threaded fastener. The mounts shall include leveling bolts that may be rigidly connected to the equipment.
2. Type FN isolators shall be one of the following products or approved equal:

a.	Type RVD	A.B.
b.	Type ND	M.I.
c.	Type RD	K.N.C.
d.	Type D44	V.E.
e.	Series RD	V.M.&C.

E. Type FNC (Floor Neoprene Constrained)

1. FNC isolators shall incorporate bridge-bearing neoprene elements with all-directional restraint. The mount shall consist of a ductile iron casting containing two (2) separated and opposing molded neoprene elements. The elements shall prevent the central threaded sleeve and attachment bolt from contacting the casting during normal operation. Bolt holes shall be provided in the base and the top shall have a threaded fastener.
2. Type FNC isolators shall be one of the following products or approved equal:
   a. Type BR M.I.
   b. Series RSM V.M.&C.

F. Type PCF (Pre-compressed Fiberglass)

1. PCF isolator blocks shall be made of molded inorganic glass fiber that is individually coated and sealed with an impervious elastomeric membrane. Fiberglass shall be severely overloaded during the manufacturing process to stabilize the material into a product that is permanent and has consistent, predictable dynamic properties.
2. Type PCF isolators shall be one of the following products or approved equal:
   a. Type KIP K.N.C.

G. Type NP (Neoprene Pad)

1. NP isolators shall be one layer of 5/16" to 3/8" thick ribbed or waffled neoprene. The pads shall be sized so that they will be loaded within the manufacturer's recommended range.
2. Type NP isolators shall be one of the following products or approved equal:
   a. Type NR A.B.
   b. Type W M.I.
   c. Type NPS K.N.C.
   d. Type 200N V.E.
   e. Series Maxi-Flex V.M.&C.

H. Type DNP (Double Neoprene Pad)

1. DNP isolators shall be formed by two layers of 1/4" to 3/8" thick ribbed or waffled neoprene, separated by a galvanized steel, stainless steel or aluminum plate. If the isolator is outdoors, the plate shall not be made of galvanized steel. These layers shall be permanently adhered together. The pads shall be sized so that they will be loaded within the manufacturer's recommended range.
2. Type DNP isolators shall be formed from one of the following products or

approved equal:

a.	Type NR	A.B.
b.	Type WSW	M.I.
c.	Type NPS	K.N.C.
d.	Type 200N (Multilayers)	V.E.
e.	Series Maxi-Flex	V.M.&C.

I. Type HSN (Hanger Spring and Neoprene)

1. HSN isolators shall consist of a freestanding and laterally stable steel spring and a neoprene element in series, contained within a steel housing. Spring diameters and hanger housing lower hole sizes shall be large enough to permit the hanger rod to swing through a 30 degrees arc before contacting the housing. Alternatively, other provisions shall be made to allow for a 30 degrees arc of movement of the bottom hanger rod without contacting the isolator housing. Spring diameter shall be not less than 0.8 of the compressed height of the spring at the rated load. Spring elements shall have a minimum additional travel-to-solid equal to 50% of the rated deflection. The neoprene element shall be designed to have a 0.3" minimum static deflection. The deflection of both the spring element and the neoprene element shall be included in determining the overall deflection of Type HSN isolators.
2. A pre-compressed glass fiber element may be substituted for the neoprene element.
3. Type HSN isolators shall be one of the following products or approved equal:

a.	Type BSR-A	A.B.
b.	Type 30N	M.I.
c.	Type SRH or SFH	K.N.C.
d.	Type SNRC	V.E.
e.	Type RSH 30A or RSHSC	V.M.&C.

J. Type HN (Hanger Neoprene)

1. HN isolators shall consist of a neoprene-in-shear element contained within a steel housing. A neoprene neck bushing shall be provided where the hanger rod passes through the hanger housing to prevent the rod from contacting the hanger housing.
2. A pre-compressed glass fiber element may be substituted for the neoprene element.
3. Type HN isolators shall be one of the following products or approved equal:

a.	Type BRD-A	A.B.
b.	Type HD	M.I.
c.	Type RH or FH	K.N.C.

d. Type 3C V.E.
e. Type RHD V.M.&C.

2.02 EQUIPMENT BASES

A. Type BSR (Base - Steel Rail)

1. Steel rail bases shall consist of structural steel sections sized to provide a rigid beam that will not twist, deform, or deflect in any manner that will negatively affect the supported equipment or the vibration isolation mounts. Rail bases shall include mounting brackets for attachment of vibration isolators.
2. Type BSR bases shall be one of the following products or approved equal:
   a. Type C or CIS A.B.
   b. Type R or ICS M.I.
   c. Type KRB or KFB K.N.C.
   d. Type CS V.E.
   e. Type WFR V.M.&C.

B. Type BSF (Base - Steel Frame)

1. Steel frame bases shall consist of structural steel sections sized, spaced, and connected to form a rigid base which will not twist, rack, deform, or deflect in any manner which will negatively affect the supported equipment or the vibration isolation mounts. Frames shall be adequately sized to support basic equipment units and motors plus any associated pipe elbow supports, duct elbow supports, electrical control elements, or other components closely related and requiring resilient support in order to prevent vibration transfer to the building structure. The depth of steel frame bases shall be at least 1/10 the longest dimension of the base supported between isolators and not less than 6". The base footprint shall be large enough to provide stability for supported equipment.
2. Frame bases shall include side mounting brackets for attachment to vibration isolators. Mounting brackets shall be located on the sides of the base that are parallel to the axis of rotation of the supported equipment.
3. Type BSF bases shall be one of the following products or approved equal:
   a. Type WX A.B.
   b. Type WFSL M.I.
   c. Type SFB K.N.C.
   d. Type HB V.E.
   e. Series WFB V.M.&C.

C. Type BIB (Base - Inertia Base)

1. Inertia bases shall be formed of stone-aggregate concrete (150 lb/cu. ft.)

and appropriate steel reinforcing cast between welded or bolted perimeter structural steel channels. Inertia bases shall be built to form a rigid base that will not twist, rack, deform, deflect, or crack in any manner that would negatively affect the supported equipment or the vibration isolation mounts. Inertia bases shall be adequately sized to support basic equipment units and motors plus any associated pipe elbow supports, duct elbow supports, electrical control elements, or other components closely related and requiring resilient support in order to prevent vibration transfer to the building structure. Inertia base depth shall be at least 1/12 the longest dimension of the base supported between isolators and not less than 6". The base footprint shall be large enough to provide stability for supported equipment. Inertia bases shall include side mounting brackets for attachment to vibration isolators. Mounting brackets shall be located on the sides of the base that are parallel to the axis of rotation of the supported equipment. Concrete may be provided by the General Contractor.

2. Frame and reinforcement for Type BIB bases shall be one of the following products or approved equal:

a.	Type CPF	A.B.
b.	Type KSL or BMK	M.I.
c.	Type CIB-L or CIB-H	K.N.C.
d.	Type SN	V.E.
e.	Series MPF or WPF	V.M.&C.

2.03 RESILIENT PENETRATION SLEEVE/SEAL

A. Resilient penetration sleeve/seals shall be field-fabricated from a pipe or sheet metal section that is l/2" to 3/4" larger than the penetrating element in all directions around the element, and shall be used to provide a sleeve through the construction penetrated. The sleeve shall extend 1" beyond the penetrated construction on each side. The space between the sleeve and the penetrating element shall be packed with glass fiber or mineral wool to within 1/4" of the ends of the sleeve. The remaining 1/4" space on each end shall be filled with acoustical sealant to form an airtight seal. The penetrating element shall be able to pass through the sleeve without contacting the sleeve. Alternatively, prefabricated sleeves accomplishing the same result are acceptable.

2.04 RESILIENT LATERAL SUPPORTS

A. These units shall either be a standard product of the vibration isolator manufacturer, or be custom fabricated from standard components. These units shall incorporate neoprene isolation elements similar to Type FN that are specifically designed to provide resilient lateral bracing of ducts or pipes.

B. Resilient lateral supports shall be one of the following products or approved

equal:

1.	Type Custom	A.B.
2.	Type ADA	M.I.
3.	Type RGN	K.N.C.
4.	Type VERG or VPL	V.E.
5.	Type MDPA	V.M.&C.

2.05 FLEXIBLE DUCT CONNECTIONS

A. Flexible duct connections shall be made from coated fabric. The clear space between connected parts shall be a minimum of 3", and the connection shall have a minimum of 1.5" of slack material.

2.06 FLEXIBLE PIPE CONNECTIONS

A. Flexible pipe connections shall be fabricated of multiple plys of nylon cord, fabric, and neoprene; and shall be vulcanized so as to become inseparable and homogeneous. Flexible connections shall be formed in a double sphere shape, and shall be able to accept compressive, elongating, transverse, and angular movements.

B. The flexible connections shall be selected and specially fitted, if necessary, to suit the system temperature, pressure, and fluid type. In addition, suitable flexible connections should be selected, if possible, which do not require rods or cables to control extension of the connector.

C. Connectors for pipe sizes 2" or smaller shall have threaded female union couplings on each end. Larger sizes shall be fitted with metallic flange couplings.

D. Flexible pipe connections shall be one of the following or an approved equal:

1.	Type 2600 or 2655	A.B.
2.	Type Twin Sphere	Metraflex
3.	Type MFTNC or MFTFU	M.I.
4.	Double Sphere Flexible Connectors	V.E.
5.	Series VMT or VMU	V.M.&C.

2.07 THRUST RESTRAINTS

A. Thrust restraints shall consist of a spring element in series with a neoprene pad. The unit shall be designed to have the same deflection due to thrust-generated loads as specified for the isolators supporting the equipment. The spring element shall be contained within a steel frame and be designed so it can be pre-compressed at the factory to allow for a maximum of 1/4" movement during

starting or stopping of the equipment. Allowable movement shall be field-adjustable. The assembly shall be furnished complete with rods and angle brackets for attachment to both the equipment and the adjacent fixed structural anchor. The thrust restraints shall be installed on the discharge of the fan so that the restraint rods are in tension. Assemblies that place the rods in compression are not acceptable. The holes in the spring restraint brackets through which the restraint rods pass must be oversized to prevent contact between the brackets and rods.

B. Thrust restraints shall be one of the following products or an approved equal:

1.	Type TRK	A.B.
2.	Type HSR	K.N.C.
3.	Type WB	M.I.
4.	Thrust Restraint	V.E.

2.08 GROMMETS

A. Grommets shall be made of neoprene or neoprene impregnated duct that is specially formed to prevent bolts from directly contacting the isolator base plate, and shall be sized so that they will be loaded within the manufacturer's recommended load range.

B. Grommets shall either be custom made by combining a neoprene washer and sleeve, or be one of the following products or an approved equal:

1.	Type Isogrommets	MBIS, Inc. (Bedford Heights, OH)
2.	Type WB	Barry Controls (Brighton, MA)
3.	Type HG	Mason Industries Inc. (Hauppauge, NY)

2.09 ACOUSTICAL SEALANT

A. Sealants for acoustical purposes as described in this specification shall be silicone or one of the resilient, non-hardening sealants indicated below:

1.	Acoustical sealant	D.A.P.
2.	BR-96 or AC-20 (AC-20 FTR - Fire Rated)	Pecora
3.	Sonoloc	Sanborn
4.	Acoustical Sealant #834 (Acrylic Latex)	Tremco
5.	Acoustical sealant	U.S.G.

PART 3 - EXECUTION

3.01 APPLICATION

A. General

1. Refer to the PRODUCTS section of this specification for vibration isolation devices identified on the Drawings or specified herein.
2. The static deflection of all isolators specified herein is the minimum acceptable deflections for the mounts under actual load. Isolators selected solely on the basis of rated deflection are not acceptable and will be disapproved.

B. Major Equipment Isolation

1. Unless otherwise shown or specified, all floor-mounted major equipment shall be set on housekeeping pads. See architectural or structural drawings for details.
2. Types and minimum static deflections of vibration isolation devices for major equipment items shall be as scheduled on the Drawings or specified hereunder.
3. Flexible duct connections shall be installed at all fan unit intakes, fan unit discharges, and wherever else shown on the Drawings.
4. Flexible pipe connections shall be installed at all pipe connections to vibration-isolated equipment in the positions shown on the Drawings.
5. Electrical connections to vibration-isolated equipment shall be flexible, as called for in the electrical portion of the specification.
6. Thrust restraints shall be installed on all suspended fans and on all floor-mounted fans developing 4" or more of static pressure, unless the horizontal component of the thrust force can be demonstrated to be less than 10% of the equipment weight.

C. Miscellaneous HVAC Equipment Isolation

1. Miscellaneous pieces of HVAC equipment, such as converters, pressure reducing stations, dryers, strainers, storage tanks, condensate receiver tanks, and expansion tanks, which are connected to isolated piping systems, shall be vibration-isolated from the building structure by Type NP or Type HN isolators (selected for 0.1" static deflection), unless their position in the piping system requires a higher degree of isolation as called for under Pipe Isolation.

D. Pipe Isolation

1. All chilled water, condenser water, hot water, steam, refrigerant, drain and engine exhaust piping that is connected to vibration-isolated equipment shall be isolated from the building structure within the following limits:
   a. Within mechanical rooms;
   b. Within 50' total pipe length of connected vibration-isolated equipment (chillers, pumps, air handling units, pressure reducing stations, etc.);
   c. At every support point for piping that is greater than 4" in diameter.
2. Piping shall be isolated from the building structure by means of vibration isolators, resilient lateral supports, and resilient penetration sleeve/seals.
3. Isolators for the first three support points adjacent to connected equipment shall achieve one half the specified static deflection of the isolators supporting the connected equipment. When the required static deflection of these isolators is greater than 1/2", Type FSN or HSN isolators shall be used. When the required static deflection is less than or equal to 1/2", Type FN or HN isolators shall be used. All other pipe support isolators within the specified limits shall be either Type FN or HN achieving at least 1/4" static deflection.
4. Where lateral support of pipes is required within the specified limits, this shall be accomplished by use of resilient lateral supports.
5. Pipes within the specified limits that penetrate the building construction shall be isolated from the building structure by use of resilient penetration sleeve/seals.
6. Provide flexible pipe connections as called for under Major Equipment above and wherever shown on the Drawings.

E. Duct Isolation

1. All sheet metal ducts and air plenums that are within mechanical rooms or within a distance of 50' total duct length of connected vibration-isolated equipment (whichever is longer) shall be isolated from the building structure by Type FN, PCF or HN isolators. All isolators shall achieve 0.1" minimum static deflection.
2. Ducts within the specified limits that penetrate the building construction shall be isolated from the building structure by use of resilient penetration sleeve/seals.
3. Flexible duct connections shall be provided as called for above under Major Equipment and wherever shown on the Drawings.

3.02 INSTALLATION OF VIBRATION ISOLATION EQUIPMENT

A. General

1. Locations of all vibration isolation devices shall be selected for ease of inspection and adjustment as well as for proper operation.
2. Installation of vibration isolation equipment shall be in accordance with the manufacturer's instructions.

B. Isolators

1. All vibration isolators shall be aligned squarely above or below mounting points of the supported equipment.
2. Isolators for equipment with bases shall be located on the sides of the bases which are parallel to the equipment shaft unless this is not possible because of physical constraints.
3. Locate isolators to provide stable support for equipment, without excess rocking. Consideration shall be given to the location of the center of gravity of the system and the location and spacing of the isolators. If necessary, a base with suitable footprint shall be provided to maintain stability of supported equipment, whether or not such a base is specifically called for herein.
4. If a housekeeping pad is provided, the isolators shall bear on the housekeeping pad and the isolator base plates shall rest entirely on the pad.
5. Hanger rods for vibration-isolated support shall be connected to major structural members, not the floor slab between major structural members. Provide suitable intermediate support members as necessary.
6. Vibration isolation hanger elements shall be positioned as high as possible in the hanger rod assembly, but not in contact with the building structure, and so that the hanger housing may rotate a full 360 degrees about the rod axis without contacting any object.
7. Parallel running pipes may be hung together on a trapeze that is isolated from the building. Isolator deflections must be the greatest required by the provisions for pipe isolation for any single pipe on the trapeze. Do not mix isolated and un-isolated pipes on the same trapeze.
8. Pipes, ducts and equipment shall not be supported from other pipes, ducts and equipment.
9. Resiliently isolated pipes, ducts and equipment shall not come in rigid contact with the building construction or rigidly supported equipment.
10. The installed and operating heights of equipment supported by Type FSNTL isolators or with Type RC-2 isolation bases shall be identical. Limit stops shall be out of contact during normal operation. Adjust isolators to provide 1/4" clearance between the limit stop brackets and the isolator top plate, and between the travel limit nuts and travel limit brackets.
11. Adjust all leveling bolts and hanger rod bolts so that the isolated equipment is level and in proper alignment with connecting ducts or pipes.

C. Bases

1. No equipment unit shall bear directly on vibration isolators unless its own frame is suitably rigid to span between isolators and such direct support is approved by the equipment manufacturer. This provision shall apply whether or not a base frame is called for on the schedule. In the case that a base frame is required for the unit because of the equipment manufacturer's requirements and is not specifically called for on the equipment schedule, a base frame recommended by the equipment manufacturer shall be provided at no additional expense.
2. Unless otherwise indicated, there is to be a minimum operating clearance of 1" between steel rails, steel frame bases or inertia bases and the floor beneath the equipment. The isolator mounting brackets shall be positioned and the isolators adjusted so that the required clearance is maintained. The clearance space shall be checked by the Contractor to ensure that no construction debris has been left to short circuit or restrict the proper operation of the vibration isolation system.
3. Isolation bases shall be installed in strict accordance with the manufacturer's instructions.

D. Flexible Duct Connections

1. Prior to installation of the flexible connection, sheet metal ducts and plenum openings shall be squarely aligned with the fan discharge, fan intake, or adjacent duct section, and the gap between connected parts shall be uniform. Flexible duct connections shall not be installed until this provision is met. There shall be no metal-to-metal contact between connected sections, and the fabric shall not be stretched taut.

E. Flexible Pipe Connections

1. Install flexible pipe connections in strict accordance with the manufacturer's instructions.

F. Thrust Restraints

1. Thrust restraints shall be attached on each side of the fan parallel to the thrust force. This may require custom brackets or standoffs. The body of the thrust restraint shall not come in contact with the connected elements. Thrust restraints shall be adjusted to constrain equipment movement to the specified limit.

G. Grommets

1. Where grommets are required at hold down bolts of isolators, bolt holes shall be properly sized to allow for grommets. The hold down bolt

assembly shall include washers to distribute load evenly over the grommets. Bolts and washers shall be galvanized.

H. Resilient Penetration Sleeve/Seals

1. Maintain an airtight seal around the penetrating element and prevent rigid contact between the penetrating element and the building structure. Fit the sleeve tightly to the building construction and seal airtight on both sides of the construction penetrated with acoustical sealant.

END OF SECTION

SECTION 15052

PIPING AND ACCESSORIES

PART 1 - GENERAL

1.01 GENERAL REQUIREMENTS

A. All work specified herein shall be accomplished in accordance with the applicable requirements of Section 15000 - HVAC General.

B. It should be noted that all products, piping, valves, fittings, and accessories specified in this section are for systems with maximum operating pressures of 150 psig to establish the type and quality of products required. Where maximum operating pressure is greater than 150 psig in any system, the Contractor shall furnish and install products, piping, valves, fittings, and accessories with pressure classifications that are suitable for service. In general, all products, piping, valves, fittings, and accessories below 350 feet of the highest piping point must have pressure ratings of 300 psi W.O.G. or greater. All products, piping, valves, fittings, and accessories below 575 feet of the highest piping point must have pressure ratings of 500 psi or greater.

1.02 WORK INCLUDED

A. The work under this section shall include all labor, materials, accessories, services and equipment necessary to furnish and install all piping and accessories, complete, as indicated on the Drawings and as specified herein.

B. Without limiting the generality thereof, the work in this section shall include the following items:

1. Piping and pipe supports
2. Valves
3. Strainers
4. Thermometers
5. Pressure gauges
6. Painting of pipe
7. Expansion Joints

C. Makeup water connections from the connection left under the Plumbing Section to the systems shall be the same as specified under Plumbing for Cold Water.

PART 2 - PRODUCTS

2.01 PIPING

A. Piping shall be manufactured in the United States. Submit Certificate of Manufacture with shop drawings.

B. In general, all chilled water, hot water and condenser water supply and return piping shall be Schedule 40 black steel, standard weight, ASTM A-53 minimum with welded, grooved or screwed joints. Fittings in lines 2" and smaller shall be screwed end, black, 150-pound malleable iron. Unions, 2" and smaller, shall be 150-pound, ground joint with brass to iron seats. Fittings in lines 2-1/2" and larger shall be Standard weight forged steel welded or grooved fittings. Flanges shall be of the welding slip on type or grooved joint flange adapters.

Branch piping connections may be made using welding nozzles such as Weldolets or Thredolets and manufactured by Bonney Forge & Tool Works or equal. All welding shall be in accordance with the Standard Manual of Pipe Welding Contractors National Association.

Bolted branch outlets, Mechanical-T™, as manufactured by Anvil Int'l or Victaulic may be used in lieu of Weldolets and Thredolets in applicable sizes.

C. Grooved joint couplings shall consist of two or more housings manufactured of ductile iron conforming to ASTM A536, zinc electroplated carbon steel bolts and nuts, and pressure responsive elastomer gasket. (Gasket grade shall be suitable for the intended service. Gasket shall be manufactured by the coupling manufacturer.)

1. Rigid Type: Housings cast with offsetting, angle-pattern or tongue and groove bolt pads to provide rigidity and system support and hanging in accordance with ANSI B31.1 and B31.9. Anvil Int'l Style 772 or Victaulic Style 07.
2. Flexible Type: Use in locations where vibration attenuation and stress relief are required. Anvil Int'l Style 705, 707 or Victaulic Style 77.
3. Flange Adapters: Flat Face, for direct connection to ANSI Class 125 or 150 flanged components. Anvil Int'l Style 7012 or Victaulic Style 741.

D. Final connections to equipment shall be made with unions, grooved joint couplings, or flanges.

E. Gaskets for flanged joints shall be 1/16" thick, suitable for the service.

F. The condensate waste piping from the air conditioning unit drain pans shall be Type "M" copper. The piping shall have a 6" loop seal at each unit and run to nearest drain or as indicated on the Drawings. Drain piping from all plenums for air intakes shall be run to nearest practical floor drain and shall terminate with an elbow turned down into the drains and pump drains shall be Type "M" copper with wrought fittings.

G. The chilled water, hot water and condenser water supply and return piping, as well as potable water piping systems may be stainless steel, using the Vic-Press 304™ piping system, in lieu of threaded steel and soldered copper.

H. The city water piping to all HVAC equipment shall be Type "L" hard tempered copper with wrought copper fittings. It shall be installed as detailed on the plans and in compliance with the equipment manufacturer's recommendations. The water supply will be left by the plumbing subcontractor and extended and connected to the equipment by the HVAC subcontractor. This piping will be insulated to match that which the plumbing subcontractor supplies.

I. High points of each water main shall be fitted with a manual air vent. Low points of water systems shall be fitted with 3/4" drain valves with hose bibbs.

2.02 PIPE SUPPORTS

A. All pipe supports, clamps, and inserts shall be provided under this section. Pipe hanger assemblies shall include turnbuckles or other means of vertical adjustment. Trapeze hangers may be used in lieu of separate hangers for closely spaced, parallel lines. Pipe hangers shall be as manufactured by Carpenter & Patterson, Inc., Calco Steel Products Company, Michigan, Anvil Int'l, P.H.D. or approved equal. Product numbers used below are Carpenter and Patterson.

B. Hangers for steel piping 2" and smaller shall be Figure 100 band type. Hangers for piping 2-1/2" to 5" shall be Figure 100. Hangers for piping 6" and larger shall be Figure 100. Hangers shall have steel rods with two (2) nuts and shall be suspended from suitable beam clamps or concrete inserts.

1. Rod sizes shall be as recommended by the support manufacturer and at least the following:

a.	Pipe to 2"	3/8" diameter
b.	2-1/2" to 3"	1/2" diameter
c.	4" to 5"	5/8" diameter
d.	6"	3/4" diameter
e.	8" and larger	7/8" diameter

2. Rod for trapeze hangers supporting several pipes shall be sized for the equipment load.

3. Maximum spacing hangers and supports for all piping shall be:
   a. 2" and smaller 10 feet on centers
   b. 2-1/2" and larger 12 feet on centers

C. Hangers for copper piping shall be similar to above for steel piping but where in contact with the copper piping, they shall be copper plated.

D. Hangers for insulated lines shall have insulation saddles and shields.

E. Pipe Vibration Hangers:

1. All piping attached to the building serving air handlers, air conditioners, pumps, chillers, etc., with rotating or pulsating parts shall be hung on spring isolation hangers for at least 20 feet horizontally from where it attaches to any of the above. The spring hangers shall be capable of 1" deflection and when actually loaded, have at least 1/2" deflection.

2.03 VALVES

A. All valves shall be as manufactured by Anvil Int'l, Nibco, Milwaukee, Stockham, Hammond, Crane Company, Lunkenheimer, Centerline, Combination Pump Valve Company, Victaulic or DeZurik. Unless otherwise indicated, the figure numbers indicated below are from Jenkins Brothers as a means of identifying type, quality, materials and workmanship desired. Valves of equal quality shall be furnished with sweat connection in copper piping.

B. Gate, butterfly or ball valves shall be installed in the supply connections to each piece of equipment and as indicated on the Drawings or as required.

C. Provide a butterfly valve, ball valve, or balance cock in the return connection to each water coil, bypass line on three-way valves and in the return water piping systems as required for shutoff and balancing purposes.

D. Gate and globe valves 2" and smaller shall be 150-pound bronze, screwed end, union bonnet valves. Gate valves shall be Figure 47-U solid wedge, inside screw and traveling stem. Globe valves shall be Figure 546-P regrind and renewable stainless plug and seat ring.

E. Gate valves 2-1/2" and larger shall be 125-pound iron body, bronze trim, outside screw and yoke, rising stem and solid wedge Figure 651-A flanged.

F. Ball valves shall be used on all water lines 2" and smaller for shut-off service. Valves shall have bronze body, 316 stainless steel ball and stem, conventional port and shall be designed with an adjustable packing box, a stem retaining collar such that the stem shall not be capable of removal from the valve while it is under

pressure, and shall be equipped with packing suitable for the intended service. The pressure temperature rating of the valves shall not be less than the design criteria applicable to all components of the system.

1. Valves used with the Vic-Press 304™ piping system shall have stainless steel body, ball and stem, standard port, and PTFE seats. The pressure temperature rating of the valves shall not be less than the design criteria applicable to all components of the system. Victaulic Series 569.

G. Globe valves 2-1/2" and larger shall be 125-pound iron body, outside screw and yoke, regrindable and renewable bronze disc and seat ring figure 613 flanged.

H. Check valves as required in lines 2" and smaller shall be 150-pound bronze, horizontal swing type with regrinding bronze seat and disc that may be reground without removing the valve from the line; screwed end, Figure 92-A.

I. Check valves in lines 2-1/2" and larger shall be 125-pound iron bronze mounted, swing checks with flanged or grooved ends and regrindable and renewable bronze disc and seat ring; Figure 624. At Contractor's option, spring loaded wafer type or grooved end check valves may be used.

1. Grooved end check valves shall be ductile iron body type with stainless steel spring and shaft.
   a. 2-1/2" and 3": PPS (Polyphenylene Sulfide) coated body and seat, aluminum bronze disc, and elastomer seal.
   b. 4" through 14": Black enamel coated body, elastomer encapsulated ductile iron disc, and welded-in nickel seat.
   c. Anvil Int'l Fig 7811 or Victaulic Series 716.

J. Comparative valves that may be supplied:

Crane	Fairbanks	Powell	Lukenheimer
431-UB	U-0226	27005	3127
14-1/2-P	0525	2600	LQ-600-150
465-1/2	0405	1793	1430
351	0131	241	1123
37	0640	578	2114
373	0702	559	1790
28E	0151-0153	378-368	

K. Chain operated wheels shall be installed on all hand wheel valves which are over seven feet from the floor to the valve stem. Chain length will be to within 6'-6" of the floor.

L. Drain valves shall be angle 3/4" pattern bronze valves with renewable disc and

hose thread outlet.

M. Butterfly valves 2-1/2" and larger: MSS SP-67; rated at 200 psi; cast iron body conforming to ASTM A 126, Class B. Provide valves with field replaceable EPDM sleeve, nickel plated ductile iron disc stainless steel stem and EPDM O-ring stem seals. Provide lever operators with locks for sizes 2" through 6" and gear operators with position indicator for sizes 8" through 24". Provide lug, grooved, or wafer type as indicated. Drill and tap valves on dead end services or those requiring additional body strength.

1. Grooved end butterfly valves shall be rated to 300 psi CWP; PPS coated ductile iron body conforming to ASTM A 536, Grade 65-45-12.
   a. 2-1/2" through 12" valves shall have an elastomer encapsulated ductile iron disc with integrally cast stem, and 416 stainless steel bearing and trunnion. Provide lever operators with locks for sizes 2" through 6" and gear operators with position indicator for sizes 8" through 12".
   b. 14" through 24" valves shall have a PPS coated ductile iron disc, disc mounted elastomer seal, 17-4 PH stainless steel stems, and reinforced PTFE bearings. Provide gear operations with position indicator.

N. All valves in insulated piping systems shall have an extension on the valve to facilitate operation of valve without compromising insulation thickness.

2.04 SLEEVES AND PLATES

A. All pipes passing through masonry walls shall be fitted with schedule 40 steel sleeves. Sleeves shall be of the first possible size larger than the outside diameter of the pipe to be sleeved or the insulation jacket on covered pipes. Sleeves shall be flush on either side of the masonry walls.

B. All pipes passing through the masonry floors shall be fitted with schedule 40 steel sleeves of the first size larger than the pipe to be sleeved. All sleeves on these floors shall extend 1" above the finished floor. All pipe sleeves through the floors of the mechanical room shall be galvanized steel, 2" high above the finished floor. After the pipes are installed, all sleeves shall be packed around the pipes with fiberglass to 1/2" from the top of the sleeves, then topped off with a 1/2" depth of sealant such as PRC-Rubber caulk 7000 or other such approved sealant.

C. All exposed, uncovered pipes passing through walls or ceilings shall be fitted with chromium plated spun or split type escutcheons with a clamping device for holding the escutcheon in position.

D. All exposed uncovered pipes passing through floors shall be fitted with chromium plated spun or split type escutcheons which shall be high enough to cover the pipe sleeve and shall be fitted with a clamping device for holding the escutcheon in position and which shall rest upon the finished floor.

2.05 STRAINERS

A. Furnish & install a full size Y-pattern strainer Anvil Int'l, Mueller Corp., Keckley, Victaulic or equal on the inlet side of each water circulating pump and wherever else shown on the Drawings or as required.

B. The strainer shall have cast iron, ductile iron, or bronze bodies of ample strength for the pressure to which they shall be subjected; removable cylindrical or conical screens of stainless steel or brass; and suitable flanges, grooves or tappings for connections to the piping they serve. They shall be of such design as to allow blowing out of the accumulated dirt and to facilitate removal and replacement of a strainer screen without disconnecting the main piping.

C. An approved valved dirt blowing connection shall be made to each strainer with the valve located 6" to 12" below the strainer. In the case of strainers under high pressure steam or water pressure, the blowout connection shall terminate at a point where there will be no risk of flooding, damage or personal injury.

D. Screens on water service shall have 1/16" perforations on strainers 3" and smaller and 1/8" perforations on strainers 4" and larger.

2.06 PRESSURE GAUGES

A. Pressure gauges shall be furnished and installed at the suction and discharge connections of each pump, at each coil, or piece or equipment in the system exclusive of accessories unless shown otherwise.

B. Gauges shall be 4-1/2" diameter with metal case, bronze movement, bronze bourdon tube and brass ring. Gauges shall be accurate within 1% over the entire scale. All gauges shall have "T" handle cocks.

C. Gauges shall have a dial range that will provide a reading at maximum design operating pressure of between 50% and 75% of the dial range. Systems that will go into a vacuum shall also read 0" to 30" of vacuum.

D. Gauges shall be so placed as to be easily readable from the floor.

E. Gauges shall be manufactured by Weiss, Winters, Trerice or approved equal.

F. As an alternate to the above gauges, the Contractor may substitute Pete's Plugs

with one (1) portable master gauge set with carrying case.

2.07 THERMOMETERS

A. Thermometers shall be adjustable angle front reading red mercury type with 12" scale. Case shall be cast aluminum.

B. Angle adjustment shall utilize two positive locking set screws.

C. Furnish thermometers of temperature range suited for systems in which they are installed.

D. Thermometer wells shall be the full immersion type matched to thermometer stem length.

E. Furnish thermometers and accessories as manufactured by Weiss, Winters, Trerice or approved equal, at each piece of equipment that has a temperature change in a fluid.

2.08 FLEXIBLE CONNECTIONS

A. Furnish and install the flexible connections in the piping at all equipment subject to movement or vibration.

B. At the Contractor's option, the use of a minimum of three (3) flexible type grooved couplings may be substituted for flexible connections. Couplings shall be placed in close proximity to the source of the vibration. Consult coupling manufacturer for proper installation requirements.

C. At a minimum, flexible connections shall be provided at connections to cooling towers, chillers and base mounted pumps.

2.09 HEAT CABLE FOR FREEZE PROTECTION OF PIPING

A. Provide electric heat tracing on all exterior make-up and condenser water piping above grade.

B. Electric heat cable shall be installed linearly along the bottom of the pipe and allowance shall be made for all fittings, valves, pipe supports, etc. Cable shall be installed prior to insulation of the piping system.

C. Electric cable shall be capable of maintaining a minimum water temperature of 40 degrees F at an ambient air temperature of 0 degrees F.

D. The electric cable shall be the self-regulating type which responds to varying localized temperature conditions by varying the heat output along its length. This shall be accomplished by a self-regulating core which varies its resistance continuously with changes in temperature. A constant wattage heater is unacceptable.

E. Provide a thermostat control which de-energizes the heating cable when the ambient air temperature is above 40 degrees F (adjustable). While energized, the heat cable shall be entirely self-regulating.

F. Provide all power connection hardware, splices, end seals, etc. to accomplish a complete installation. All hardware shall be by the same manufacturer as the cable.

G. Electric heating cable and accessories shall be UL Listed. Electric heating cable shall conform to all requirements of Division 16.

H. Electric heating cable shall be Raychem XL or approved equal.

2.10 PIPING IDENTIFICATION

A. A marker showing the service and an arrow indicating the direction of flow shall be applied on the following piping installed under this section of the Specifications:

1. Condenser water
2. Chilled water
3. Hot water
4. Auxiliary condenser water
5. Tempered water (heat pump loop)
6. Steam (with pressure)
7. Condensate Return (with pressure)

B. In general, the piping shall be labeled at each wall penetration (both sides), riser equipment and each change of direction. In addition, straight runs of piping shall be labeled at intervals not greater than 50 feet.

C. The letter size and background color shall conform to ANSI/ASME A13.1 Standard - Identification of Pipe System. The vinyl plastic markers shall be as manufactured by Seton Name-Plate Co., W.H. Brady Co., or Westline Products.

2.11 EXPANSION LOOPS AND JOINTS

A. Expansion in piping systems shall be compensated for by the use of u-bends, z-bends, or expansion joints as indicated. U-bends and z-bends shall be complete

with pipe guides and anchors.

B. Expansion joints shall be either bellows type or slip type suitable for the application in which installed.

C. Bellows type expansion joints shall be manufactured by Metraflex, Mercer Rubber Co., Flexicraft or approved equal.

D. Slip type expansion joints shall be manufactured by Hi-Span, Yarway, Advanced Thermal Systems or approved equal.

PART 3 - EXECUTION

3.01 INSTALLATION

A. The Drawings are diagrammatic and the final arrangement of the work shall suit field conditions, the characteristics of the materials used and the instructions of the Engineer. Verify all dimensions in the field. Access and clearances must be provided and maintained for the proper operation, maintenance service and repair of the work.

B. Install in the piping all automatic control valves, thermometer wells, and like apparatus furnished by the temperature control manufacturer.

C. Hangers shall be arranged to maintain the required grading and pitch of piping, to prevent vibration and to provide for expansion and contraction.

D. Each vertical line shall be supported at its base using a suitable hanger placed in the horizontal line near the riser, unless otherwise noted, for base elbow support.

E. Grooved joints shall be clean and free from indentations, projections, and roll marks in the area from pipe end to groove. Use grooved fittings, couplings, valves, and specialties of a single manufacturer. Grooving tools shall be of the same manufacturer as the grooved components.

F. Stainless steel pipe shall be certified for use with the Vic-Press 304™ piping system. Pipe shall be square cut, +/-0.030", properly deburred and cleaned. Mark pipe ends at the required location using a manufacturer supplied gauge to ensure full insertion into the coupling or fitting during assembly. Use a Victaulic “PFT” series tool with the proper sized jaw for pressing.

3.02 TESTING OF PIPING

A. Supply all materials, labor, and power required for testing. Make preliminary tests and prove work satisfactory. Notify the Engineer in ample time to be present

for final testing of all piping. Tests shall be made before insulation or concealing any piping.

B. Repair defects disclosed by tests or, if required by the Engineer, replace defective work with new work without additional cost to the Owner. Repairs to piping systems shall be made with new material. No caulking of screwed joints, cracks or holes will be accepted. Make tests in stages to facilitate work of others. Use of wicking in tightening leaking joints is not permitted.

C. The Contractor shall be responsible for work disturbed or damaged by tests and/or repair and replacement of his work and shall cause work so disturbed or damaged to be restored to its original condition at no additional expense to the Owner.

D. Unless otherwise specified, all piping shall be hydrostatically tested to 130 psi. Tests shall be of 2 hours duration during which time piping shall show no leaks and during which time no sealing of leaks will be permitted. Any equipment not capable of withstanding test pressures shall be suitably isolated from test pressure.

3.03 PAINTING

A. Prior to insulation being applied, clean pipe and fittings of all rust, dirt, grease, etc. and coat rusted areas with a rust preventative paint "Rust Destroyer" by Advance Protective Products, Inc., Fairlawn, NJ (201) 794-2000 or approved equal. Also refer to Section 15000 - HVAC General for painting of ferrous hangers and supports.

END OF SECTION

SECTION 15150

AUTOMATIC CONTROLS

PART 1 - GENERAL

1.01 Work Included:

A. General - Building Management System (BMS) Contractor shall provide and install:

1. A fully integrated Building Automation System (BAS), incorporating direct digital control (DDC) for energy management, equipment monitoring and control, and subsystems with open communications capabilities as herein specified.

2. Complete temperature control system to be DDC with electric actuation as specified herein.

3. All wiring, conduit, panels, and accessories for a complete operational system.

4. BMS Contractor shall be responsible for all electrical work associated with the BMS.

a. Perform all wiring in accordance with all local and national codes.

b. Install all line voltage wiring, concealed or exposed, in conduit in accordance with the division 16 specifications, NEC and local building code.

c. Provide extension of 120 volt, 20 amp circuits and circuit breakers from Emergency power panels for all BMS equipment power. Provide and install local UPS Power supply for all BMS system panels and equipment.

d. Surge transient protection shall be incorporated in design of system to protect electrical components in all DDC Controllers and operator's workstations.

e. All low voltage electrical control wiring throughout the building whether in exposed areas shall be run in conduit in accordance with the division 16 specifications, local building code and the NEC.

f. Provide all miscellaneous field device mounting and interconnecting wiring for all mechanical systems including fuel oil system, emergency generators, chillers, water treatment, AC units, condensing units, expansion tanks, VFD, unit heaters, filtration systems, terminal units, fan coil units, electric heater's, chiller control system.

g. All systems requiring interlock wiring shall be hardwired interlocked and shall not rely on the BMS to operate (e.g. emergency generator to fuel oil pump interlock, emergency generator damper interlock, etc.) Interlock wiring shall be run in separate conduits from BMS associated wiring.

5. All wells for water monitoring devices, flow switches and alarms, as required.

   a. All installation kits for turbine flow meters, allow service and removal under pressure.

6. Provide open communications system. The system shall be an open architecture with the capabilities to support a multi-vendor environment. To accomplish this effectively, system shall be capable of utilizing standard protocols as follows as well as be able to integrate third-party systems via existing vendor protocols.

   a. System shall be capable of high speed Ethernet communication using TCP/IP protocol.

   b. System shall be capable of BACnet communication according to ANSI/ASHRAE 135-2004.

   c. System shall be capable of OPC server communications according to OPC Data Access 2.0 and Alarms and Events 1.0.

   d. The system shall be capable of supporting both standard and vendor specific protocols to integrate a wide variety of third-party devices and legacy systems.

   e. The intent is to either use the Operator Workstation provided under this contract to communicate with control systems provided by other vendors or to allow information about the system provided in this contract to be sent to another workstation. This allows the user to have a single seat from which to perform daily operation.

7. Provide system graphics for each controlled device and/or integrated systems as required by the owner. Origin of information shall be transparent to the operator and shall be controlled, displayed, trended, etc. as if the points were hardwired to the BMS.

8. Primary DDC panels as follows:

   a. Minimum one (1) BMS system Primary DDC panel per floor. The application specific controllers installed for the terminal units on a floor will be connected to the BMS panel on the same floor.
   b. Minimum one (1) BMS system Primary DDC panel per each major mechanical system:

      1) Air Handling Unit
      2) Hot Water heat Exchangers and associated pumps
      3) Chillers and associated pumps
      4) Cooling Towers associated pumps

   c. It shall be acceptable to combine up to three (3) of the following mechanical equipment into one (1) Primary DDC panel:

      1) Exhaust Fans
      2) Standalone Supply Fans
      3) Package AC Units

   d. It is acceptable to wire the following systems into any of the Primary DDC panels:

      1) Miscellaneous alarm monitoring (i.e. ATS, leak, temperature, light …etc.)
      2) Miscellaneous equipment (i.e. Unit Heater, Domestic Water Heater, Standalone Dampers …etc.)

   e. Motors in motor control centers shall be controlled from the DDC controller associated with HVAC system. It shall not be acceptable to control all motors in a MCC from one DDC controller dedicated to the MCC. The intent of this specification is that the loss of any one DDC controller shall not affect the operation of other HVAC systems, only for the points connected to the DDC controller.

I.

9. Stand-alone Application Specific Controllers (ASCs) for terminal equipment (CAV, FP VAV, and VAV units, and fan coil units).

B. General product description

1. The installation of the control system shall be performed under the direct supervision of the BMS Contractor with the shop drawings, flow diagrams, bill of materials, component designation, or identification number and sequence of operation all bearing the name of the manufacturer. The BMS Contractor shall certify in writing, that the shop drawings have been prepared according to the equipment manufacturer's guidelines.

2. All materials and equipment used shall be standard components, regularly manufactured for this and/or other systems and not custom designed specially for this project. All systems and components shall have been thoroughly tested and proven in actual use for at least two years.

3. The system shall be scalable in nature and shall permit expansion of both capacity and functionality through the addition of sensors, actuators, DDC Controllers, and operator devices.

4. System architectural design shall eliminate dependence upon any single device for alarm reporting and control execution. Each DDC Controller shall operate independently by performing its own specified control, alarm management, operator I/O, and data collection. The failure of any single component or network connection shall not interrupt the execution of any control strategy, reporting, alarming and trending function, or any function at any operator interface device.

5. DDC Controllers shall be able to access any data from, or send control commands and alarm reports directly to, any other DDC Controller or combination of controllers on the network without dependence upon a central or intermediate processing device. DDC Controllers shall also be able to send alarm ~~reports~~ to multiple operator workstations without dependence upon a central or intermediate processing device.

6. DDC Controllers shall be able to assign password access and control priorities to each point individually. The Iogon password (at any PC workstation or portable operator terminal) shall enable the operator to monitor, adjust or control only the points that the operator is authorized for. All other points shall not be displayed at the PC workstation or portable terminal. (e.g. all base building and all tenant points shall be accessible to any base building operators, but only certain base building and tenant points shall be accessible to tenant building operators). Passwords and priority levels for every point shall be fully programmable and adjustable.

1.02 Products Furnished but Not Installed Under This Section

A. Hydronic Piping:

1. Control Valves
2. Temperature Sensor Wells and Sockets
3. Flow Switches
4. Flow Meters

B. Refrigerant Piping:

1. Pressure and Temperature Sensor Wells and Sockets

C. Duct-work Accessories:

1. Dampers
2. Air-flow Stations
3. Terminal Unit Controls

1.03 Products Installed but Not Furnished Under This Section

A. Refrigeration Equipment:

1. Refrigerant Leak Detection System

B. Rooftop Air Handling Equipment:

1. Thermostats
2. Duct Static Pressure Sensors

1.04 Products Integrated To but Not Furnished or Installed Under This Section

A. Variable Frequency Drives:

B. BACnet System

1. Server
2. Client

1.05 Related Sections

A. The General Conditions of the Contract, Supplementary Conditions, and General Requirements are part of this specification and shall be used in conjunction with this section as part of the contract documents.

1.06 Approved Control System Contractors and Managers

A. The following are the approved Control System Contractors and Manufacturers:
   1. Acceptable manufacturers/installers for automatic controls: Siemens, Johnson Controls, Inc, ALC, Honeywell, Carrier, Trane, York
   2. Controls must tie into existing Siemens Building Technologies, Inc. - Product Line: APOGEE System.

1.07 Quality Assurance

A. The BAS system shall be designed and installed, commissioned and serviced by factory trained personnel. BMS contractor shall have an in-place support facility within 100 miles of the site with technical staff, spare parts inventory and necessary test and diagnostic equipment. The BMS contractor shall provide full time, on site, experienced project manager for this work, responsible for direct supervision of the design, installation, start up and commissioning of the B.M.S. The Bidder shall be regularly engaged in the installation and maintenance of BMS systems and shall have a minimum of ten (10) years of demonstrated technical expertise and experience in the installation and maintenance of B.M.S. systems similar in size and complexity to this project.

B. The BMS contractor shall maintain a service organization consisting of factory trained service personnel and provide a list of 10 projects, similar in size and scope to this project, completed within the last five years.

C. Materials and equipment shall be the catalogued products of manufacturers regularly engaged in production and installation of automatic temperature control systems and shall be manufacturer's latest standard design that complies with the specification requirements.

D. All BAS peer-to-peer network controllers, central system controllers, and local user displays shall be UL Listed under Standard UL 916, category PAZX; Standard ULC C100, category UUKL7; and under Standard UL 864, categories UUKL, UDTZ, and QVAX and be so listed at the time of bid. All floor level controllers shall comply, at a minimum, with UL Standard UL 91 6category PAZX; Standard UL 864, categories UDTZ, and QVAX and be so listed at the time of Bid.

E. The BAS peer-to-peer network controllers and local user display shall also comply with the European Electromagnetic Compatibility (EMC) Framework, and bear the C-Tic Mark to show compliance. The purpose of the regulation is to minimize electromagnetic interference between electronic products, which may diminish the performance of electrical products or disrupt essential communications.

F. DDC peer-to-peer controllers shall be compliant with the European EMC Directive, Standards EN 50081-2 and EN 50082-2, at the Industrial Levels. Additionally the equipment shall be compliant with the European LVD Directive and bear the CE mark in order to show compliance to both directives.

G. All electronic equipment shall conform to the requirements of FCC Regulation, Part 15, Governing Radio Frequency Electromagnetic Interference and be so labeled.

H. The manufacturer of the building automation system shall provide documentation supporting compliance with ISO-9002 (Model for Quality Assurance in Production, Installation, and Servicing) and ISO-140001 (The application of well-accepted business management principles to the environment). The intent of this specification requirement is to ensure that the products from the manufacturer are delivered through a Quality System and Framework that will assure consistency in the products delivered for this project.

1.08 Codes and Standards

A. Work, materials, and equipment shall comply with the most restrictive of local, state, and federal authorities' codes and ordinances or these plans and specifications. As a minimum, the installation shall comply with current editions in effect 30 days prior to receipt of bids of the following codes:

1. National Electric Code (NEC)
2. Uniform Building Code (UBC)

    a. Section 608, Shutoff for Smoke Control
    b. Section 403.3, Smoke Detection Group B, Office Buildings and Group R, Division 1 Occupancies
    c. Section 710.5, Wiring in Plenums
    d. Section 713.10, Smoke Dampers
    e. Section 1106, Refrigeration Machinery Rooms
    f. Section 1107, Refrigeration Machinery Room Ventilation
    g. Section 1108, Refrigeration Machinery Room Equipment and Controls
    h. Section 1120, Detection and Alarm Systems

3. Uniform Mechanical Code (UMC)
4. ANSI/ASHRAE Standard 135- 2004, BACnet--A Data Communication Protocol for Building Automation and Control Networks
5. [Local] Building Code

1.09 System Performance

A. Performance Standards. System shall conform to the following minimum standards over network connections. Systems shall be tested using manufacturer's recommended hardware and software for operator workstation (server and browser for web-based systems).

1.10 Submittals

A. Product Submittal Requirements. Meet requirements of Section 01330 on Shop Drawings, Product Data, and Samples. Provide six copies of shop drawings and other submittals on hardware, software, and equipment to be installed or furnished. Begin no work until submittals have been approved for conformity with design intent. Provide drawings as AutoCAD 2004 (or newer) compatible files on optical disk (file format: .dwg, .dxf, .vsd, or comparable) or hard copies on 11” x 17” prints of each drawing. When manufacturer’s cutsheets apply to a product series rather than a specific product, clearly indicate applicable data by highlighting or by other means. Clearly reference covered specification and drawing on each submittal. General catalogs shall not be accepted as cut sheets to fulfill submittal requirements. Select and show submittal quantities appropriate to scope of work.

B. Provide submittals within 4 weeks of contract award

C. Submittal data shall consist of the following:

1. Direct Digital Control System Hardware:

a. Complete bill of materials indicating quantity, manufacturer, model number, and relevant technical data of equipment to be used.

b. Manufacturer’s description and technical data, such as product specification sheets, installation and maintenance instructions for items listed below and for relevant items not listed below:

1) Direct Digital Controllers (controller panels)
2) Transducers and transmitters
3) Sensors (including accuracy data)
4) Valves
5) Dampers
6) Relays and Switches
7) Control Panels

8) Power Supplies
9) Operator Interface Equipment

c. Wiring diagrams and layouts for each control panel. Show all termination numbers.

d. Floor plan schematic diagrams indicating control panel and space temperature sensor locations.

2. Central System Hardware and Software:

a. Complete bill of material indicating quantity, manufacturer, model number, and relevant technical data of equipment used.

b. Manufacturer's description and technical data such as product specifications for items listed below and for relevant items furnished under this contract not listed below:

1) Central Processing Unit (CPU)
2) Monitors
3) Keyboards
4) Power Supply
5) Battery Backup
6) Interface Equipment Between CPU and Control Panels
7) Operating System Software
8) Operator Interface Software
9) Color Graphic Software
10) Third-Party Software

c. Schematic diagrams of all control, communication, and power wiring for central system installation. Show interface wiring to control system.

d. Provide a list of BMS point naming convention. Indicate the format, structure and standards of typical point names. The naming convention shall follow the "Global_Campus_Building_Area_Equipment_Function" format. Provide a list of point names for typical equipment and functions with specific examples.

3. Controlled Systems:

a. Riser diagrams showing control network layout, communication protocol, and wire types.

b. Schematic diagram of each controlled system. Label control points with point names. Graphically show locations of control elements.

c. Schematic wiring diagram of each controlled system. Label control elements and terminals. Where a control element is also shown on control system schematic use the same name.

d. Instrumentation list for each controlled system. List control system element in a table. Show element name, type of device, manufacturer, model number, and product data sheet number.

e. Complete description of control system operation including sequences of operation. Include and reference schematic diagram of controlled system.

f. Point list for each system controller including both inputs and outputs (I/O), point numbers, controlled device associated with each I/O point, and location of I/O device.

4. Description of process, report formats and checklists to be used in Part 3: "Control System Demonstration and Acceptance."

5. Contractor shall submit documentation in the following phased delivery schedule:

a. Valve and damper schedules
b. Point Naming Convention
c. Sample Graphics
d. System schematics, including:

1) System Riser Diagrams
2) Sequence of Operations
3) Mechanical Control Schematics
4) Electrical Wiring Diagrams
5) Control Panel Layouts
6) Product Specification Sheets

e. As-Built drawings

D. Project Record Documents: Submit three copies of record (as-built) documents upon completion of installation. Submittal shall consist of:

1. Project Record Drawings. As-built versions of the submittal shop drawings provided as AutoCAD 2004 (or newer) compatible files on optical media and as 11” x 17” prints.

2. Testing and Commissioning Reports and Checklists. Completed versions of reports, checklists, and trend logs used to meet requirements of Part 3: “Control System Demonstration and Acceptance.”

3. Certification of pressure test required in Part 3: “Control Air Tubing.”

4. Operation and Maintenance (O & M) Manual.

    a. As-built versions of the submittal product data.

    b. Names, addresses, and 24-hour telephone numbers of installing contractors and service representatives for equipment and control systems.

    c. Operator’s Manual with procedures for operating control systems, logging on and off, handling alarms, producing point reports, trending data, overriding computer control, and changing set points and variables.

    d. Programming manual or set of manuals with description of programming language and of statements for algorithms and calculations used, of point database creation and modification, of program creation and modification, and of editor use.

    e. Engineering, installation, and maintenance manual or set of manuals that explains how to design and install new points, panels, and other hardware; how to perform preventive maintenance and calibration; how to debug hardware problems; and how to repair or replace hardware.

    f. Documentation of all programs created using custom programming language, including set points, tuning parameters, and object database.

    g. Graphic files, programs, and database on magnetic or optical media.

    h. List of recommended spare parts with part numbers and suppliers.

i. Complete original-issue documentation, installation, and maintenance information for furnished third-party hardware, including computer equipment and sensors.

j. Complete original original-issue copies of furnished software, including operating systems, custom programming language, operator workstation software, and graphics software.

k. Licenses, guarantees, and warranty documents for equipment and systems.

1.11 Warranty

A. Warrant labor and materials for specified control system free from defects for a period of 12 months after final acceptance. Failures on control systems that include all computer equipment, transmission equipment and all sensors and control devices during warranty period shall be adjusted, repaired, or replaced at no additional cost or reduction in service to Owner. Respond during normal business hours within 24 hours of Owner's warranty service request.

B. Work shall have a single warranty date, even if Owner receives beneficial use due to early system start-up. If specified work is split into multiple contracts or a multi-phase contract, each contract or phase shall have a separate warranty start date and period.

C. If Engineer determines that equipment and systems operate satisfactorily at the end of final start-up, testing, and commissioning phase, Engineer will certify in writing that control system operation has been tested and accepted in accordance with the terms of this specification. Date of acceptance shall begin warranty period.

D. Provide updates to operator workstation software, project-specific software, graphic software, database software, and firmware that resolve Contractor identified software deficiencies at no charge during warranty period. If available, Owner can purchase in-warranty service agreement to receive upgrades for functional enhancements associated with the above-mentioned items. Do not install updates or upgrades without Owner's written authorization.

E. Exception:

1. Contractor shall not be required to warrant reused devices, except those that have been rebuilt or repaired. Installation labor and materials shall be warranted. Demonstrate operable condition of reused devices at time of Engineer's acceptance.

2. Contractor shall not be required to warrant systems, equipment and devices or software if the damages and/or failures were caused by lack of training, unauthorized use, negligence or deliberate action of other parties, or job site conditions.

1.12 Ownership of Proprietary Material

A. Project specific software and documentation shall become Owner's property. This includes, but not limited to:

1. Graphics

2. Record drawings

3. Database

4. Application programming code

B. Documentation

1. General

a. Submit two (2) draft copies of owner's manuals for review. After review by authorized representative, the contractor shall incorporate review comments and submit four (4) interim final copies.

b. Submit four (4) copies of owner's manuals upon completion of project.

c. Submit two (2) electronic copies of complete as-built documentation on CD ROM. All drawings shall be in standard AutoCad 2004 format, other documentation shall be in standard MS Office format.

d. Update manuals with modifications made to system during guarantee period. Provide replacement pages or supplements in quantity stated above for "as built" manuals.

e. Assemble owner's manuals into multi-volume sets as necessary and required by the owner.

f. Protect each volume with a heavy duty binder. Volumes to have plastic printed dividers between major sections and have oversized binders to accommodate up to ½ inch thick set of additional information.

g. Each binder to be printed with project name and volume title on front cover and binder.

h. On the first page of each manual identify with project name, manual title, owner's name, engineer's name, contractor's name, address and service phone number, and person who prepared manual.

C. Operating manual to serve as training and reference manual for all aspects of day-to-day operation of the system. As a minimum include the following:

1. Sequence of operation for automatic and manual operating modes for all building systems. The sequences shall cross reference the system point names.

2. Description of manual override operation of all control points in system.

3. BMS system manufacturers complete operating manuals.

D. Provide maintenance manual to serve as training and reference manual for all aspects of day-to-day maintenance and major system repairs. As a minimum include the following:

1. Complete as-built installation drawings for each building system.

2. Overall system electrical power supply schematic indicating source of electrical power for each system component. Indicate all battery backup provisions.

3. Photographs and/or drawings showing installation details and locations of equipment.

4. Routine preventive maintenance procedures, corrective diagnostics troubleshooting procedures, and calibration procedures.

5. Parts lists with manufacturer's catalog numbers and ordering information.

6. Lists of ordinary and special tools, operating materials supplies and test equipment recommended for operation and servicing.

7. Manufacturer's operation, set-up, maintenance and catalog literature for each piece of equipment.

8. Maintenance and repair instructions.

9. Recommended spare parts.

E. Provide Programming Manual to serve as training and reference manual for all aspects of system programming. As a minimum include the following:

1. Complete programming manuals, and reference guides.

2. Details of any custom software packages and compilers supplied with system.

3. Information and access required for independent programming of system.

1.13 Technical Proposal

A. Technical proposals shall be prepared in accordance with these specifications. Six (6) copies of the proposal shall be submitted with the bid. Proposals that are unbound, loose, loose in a file folder, stapled, stapled in a manila file folder, etc., will not be acceptable. The technical proposal shall include the following data/information as a minimum. The order of listing here is not intended to indicate, nor should it be construed to indicate, the relative importance of the data/information:

1. Information on organizational capability to handle this project (management, personnel, manufacturing, single source responsibility, etc.)

2. Information on training program to demonstrate specification compliance.

3. System Configuration as Proposed:

a. Describe system architecture including a schematic layout with location and type (model number) of all control panels.

b. Describe system operation, functions and control techniques.

c. Modularity.

d. Migration strategies to protect owner’s investment in BMS system.

4. Technical data to support the information on the hardware and software proposed for this solution including any integrated systems and/or solutions.

5. Detailed description of all operating, command, application and energy management software provided for this project.

6. A signed certificate stating the Contractor "has read the performance and functional requirements, understands them and his technical proposal will comply with all parts of the specification."

7. Line by line specification concordance statement.

8. Other requirements for inclusion in the technical proposal are located throughout this specification.

B. Submit technical proposals with pricing in accordance with “Instructions to Bidders”.

C. Failure to submit technical proposal containing the information outlined above will result in rejection of bidder’s proposal.

PART 2 – PRODUCTS

2.01 Materials

A. All products used in this project installation shall be new and currently manufactured and shall have been applied in similar installations. Do not use this installation as a product test site unless explicitly approved in writing by Owner or Owner's representative. Spare parts shall be available for at least five years after completion of this contract.

2.02 Communication

A. The design of the BMS shall support networking of operator workstations and Building Controllers. The network architecture shall consist of two levels, an Ethernet based primary network for all operator workstations, servers, and primary DDC controllers along with secondary Floor Level Networks (FLN) for terminal equipment application specific controllers.

B. Access to system data shall not be restricted by the hardware configuration of the building management system. The hardware configuration of the BMS network shall be totally transparent to the user when accessing data or developing control programs.

C. Operator Workstation Communication:

1. All color graphic operator workstations shall reside on the Ethernet network and the consoles shall be set up in a client/server configuration.

2. The servers will act as the central database for system graphics and databases to provide consistency throughout all system workstations.

3. The network shall allow concurrent use of multiple BMS software site licenses.

D. Management Level Network Communication (MLN)

1. All PCs shall simultaneously direct connect to the Ethernet Management Level Network without the use of an interposing device.

2. Operator Workstation shall be capable of simultaneous direct connection and communication with BACnet/IP, OPC and TCP/IP corporate level networks without the use of interposing devices.

3. The Primary Network shall not impose a maximum constraint on the number of operator workstations.

4. Any controller residing on the primary network shall connect to Ethernet network without the use of a PC or a gateway with a hard drive.

5. Any PC on the Primary Network shall have transparent communication with controllers on the building level networks connected via Ethernet.

6. Any break in Ethernet communication from the PC to the controllers on the Primary Network shall result in a notification at the PC.

7. The standard client and server workstations on the Primary Network shall reside on industry standard Ethernet utilizing standard TCP/IP, IEEE 802.3.

8. System software applications will run as a service to allow communication with Primary Network Controllers without the need for user log in. Closing the application or logging off shall not prevent the processing of alarms, network status, panel failures, and trend information.

9. Any break in Ethernet communication between the standard client and server workstations on the Primary Network shall result in a notification at each workstation.

10. Access to the system database shall be available from any standard client workstation on the Primary Network.

E. Primary Network - Panel to Panel Communication:

1. All Building Controllers shall directly reside on the primary Ethernet network such that communications may be executed directly between Building Controllers, directly between server and Building Controllers on a peer-to-peer basis.

2. Systems that operate via polled response or other types of protocols that rely on a central processor, file server, or similar device to manage panel-to-panel or device-to-device communications shall not be acceptable.

3. All operator interfaces shall have the ability to access all point status and application report data or execute control functions for any and all other devices. Access to data shall be based upon logical identification of building equipment. No hardware or software limits shall be imposed on the number of devices with global access to the network data.

4. The primary network shall use TCP/IP over Ethernet. All devices must:

   a. Auto-sense 10/100 Mbps networks.

   b. Receive an IP Address from a Dynamic Host Configuration Protocol (DHCP) Server or be configured with a Fixed IP Address.

   c. Resolve Name to IP Addresses for devices using a Domain Name Service (DNS) Server on the Ethernet network.

   d. Allow MMI access to an individual Primary Network Controller using industry standard Telnet software to view and edit entire Primary Network.

5. The primary network shall provide the following minimum performance:

   a. Provide high-speed data transfer rates for alarm reporting, report generation from multiple controllers and upload/download efficiency between network devices. System performance shall

insure that an alarm occurring at any Building Controller is displayed at any PC workstations, all Building controllers, and other alarm printers within 15 seconds.

b. Message and alarm buffering to prevent information from being lost.

c. Error detection, correction, and re-transmission to guarantee data integrity.

d. Synchronization of real-time clocks between Building Controllers, including automatic daylight savings time corrections.

e. The primary network shall allow the Building Controllers to access any data from, or send control commands and alarm reports directly to, any other Building Controller or combination of controllers on the network without dependence upon a central or intermediate processing device. Building Controllers shall send alarm reports to multiple operator workstations without dependence upon a central or intermediate processing device. The network shall also allow any Building controller to access, edit, modify, add, delete, back up, restore all system point database and all programs.

f. The primary network shall allow the Building Controllers to assign password access and control priorities to each point individually. The logon password (at any PC workstation or portable operator terminal) shall enable the operator to monitor, adjust and control only the points that the operator is authorized for. All other points shall not be displayed at the PC workstation or portable terminal. (e.g. all base building and all tenant points shall be accessible to any base building operators, but only certain base building and tenant points shall be accessible to tenant building operators). Passwords and priorities for every point shall be fully programmable and adjustable.

g. Devices containing custom programming must reside on the Primary Network

F. Secondary Network – Application Specific Controller Communication:

1. Communication over the secondary network shall be the manufacturer's standard protocol.

2. This level communication shall support a family of application specific controllers for terminal equipment.

3. The Application Specific Controllers shall communicate bi-directionally with the primary network through Building Controllers for transmission of global data.

4. A maximum of 30 terminal equipment controllers may be configured on individual secondary network trunks to insure adequate global data and alarm response times.

2.03 Operator Interface:

A. Workstation hardware:

1. Personal computer operator workstations shall be provided for command entry, information management, system monitor, alarm management and database management functions. All real-time control functions shall be resident in the Building Controllers to facilitate greater distribution, fault tolerance and reliability of the building automation control.

a. Provide workstation(s) of equal capability as located on plans.

b. Workstation shall consist of a personal computer with minimum 512MB RAM, hard drive with 80 GB available space, video card with 64 MB RAM capable of supporting a minimum of 1280 × 1024 resolution with a minimum of 32 Bit color, CD-RW, and DVD-ROM Drive, mouse and 101-key enhanced keyboard. Personal computer shall be a Windows XP, 2000 or comparable operating system and shall include a minimum 3.0 GHz Pentium processor.

c. The PC monitor shall be of flat panel type and shall support a minimum display resolution of no less than 1280 × 1024 pixels. The display shall have a minimum of 17” visible area in diagonal measurement. Separate controls shall be provided for color, contrasts and brightness. The screen shall be non-reflective.

d. Provide an Epson FX-870 or equivalent printer at each workstation location or on the network (Ethernet) for recording alarms, operator transactions and systems reports.

e. Provide a color printer for printing of dynamic trend graph report, Excel reports, graphics and any other screen displays. Printer shall include as a minimum Okidata Microline 590 or equivalent.

f. Alarm Display shall list the alarms with highest priority at the top of the display. The alarm display shall provide selector buttons for display of the associated point graphic and message. The alarm display shall provide a mechanism for the operator to sort alarms.

B. Server hardware:

1. The Server hardware shall be of equal or better capability as that of Workstation and shall be equipped as follows.

a. Locate server as located on plans.

b. Provide a minimum 2GB RAM, with two hard drives of 160 GB available space each, with a RAID controller, a video card with 64 MB RAM capable of supporting a minimum of 1280 × 1024 resolution with a minimum of 32 Bit color, CD-RW, and DVD-ROM Drive, mouse and 101-key enhanced keyboard. Server shall be a Windows 2003 or comparable operating system, and shall include a minimum 3.0 GHz Pentium processor.

c. Provide a monitor of flat panel type and shall support a minimum display resolution of no less than 1280 × 1024 pixels. The display shall have a minimum of 17" visible area in diagonal measurement. Separate controls shall be provided for color, contrasts and brightness. The screen shall be non-reflective.

C. Operator Interface Software:

1. Basic Interface Description

a. Operator interface software shall minimize operator training through the use of user-friendly and interactive graphical applications, 30-character English language point identification, on-line help, and industry standard Windows application software. Interface software shall simultaneously communicate with and share data between Ethernet-connected building level networks.

b. Provide a graphical user interface that shall minimize the use of keyboard through the use of a mouse or similar pointing device,

with a "point and click" approach to menu selection and a “drag and drop” approach to inter-application navigation.

c. The navigation shall be user friendly by utilizing “forward & back” capability between screens and embedded hyperlinks to open graphics, documents, drawings, etc.

d. Selection of applications within the operator interface software shall be via a graphical toolbar menu – the application toolbar menu shall have the option to be located in a docked position on any of the four sides of the visible desktop space on the workstation display monitor, and the option to automatically hide itself from the visible monitor workspace when not being actively manipulated by the user.

e. The graphical toolbar menu shall have the option of adding additional user definable buttons that can launch local or network programs, files, folders on Internet/Intranet addresses external to the BMS software.

f. The software shall provide a multi-tasking type environment that allows the user to run several applications simultaneously. BMS software shall run on a Windows XP, 2000, or comparable 32 bit operating system. System database parameters shall be stored within an object-oriented database. Standard Windows applications shall run simultaneously with the BMS software. The mouse or Alt-Tab keys shall be used to quickly select and switch between multiple applications. The operator shall be able to work in Microsoft Word, Excel, and other Windows based software packages, while concurrently annunciating on-line BMS alarms and monitoring information

g. The software shall provide, as a minimum, the following functionality:

1) Real-time graphical viewing and control of the BMS environment

2) Reporting

3) Scheduling and override of building operations

4) Collection and analysis of historical data

5) Point database editing, storage and downloading of controller databases.

6) Utility for combining points into logical Point Groups. The Point Groups shall then be manipulated in Graphics, trend graphs and reports in order to streamline the navigation and usability of the system.

7) Alarm reporting, routing, messaging, and acknowledgment

8) "Collapsible tree," dynamic system architecture diagram application:

   a) Showing the real-time status and definition details of all workstations and devices on a management level network

   b) Showing the real-time status and definition details of all Building Controllers at the Primary Network.

   c) Showing the definition details of all application specific controllers

9) Definition and construction of dynamic color graphic displays.

10) Online, context-sensitive help, including an index, glossary of terms, and the capability to search help via keyword or phrase.

11) On-screen access to User Documentation, via online help or PDF-format electronic file.

12) Automatic database backup at the operator interface for database changes initiated at Building Controllers.

13) Display dynamic trend data graphical plot.

   a) Must be able to run multiple plots simultaneously

   b) Each plot must be capable of supporting 10 pts/plot minimum

   c) Must be able to command points directly off dynamic trend plot application.

d) Must be able to plot both real-time and historical trend data

14) Program editing

15) Report output shall have the option to be sent to an email address or group of email addresses.

16) Transfer trend data to 3rd party spreadsheet software

a) Scheduling reports

b) Operator Activity Log

c) Open communications via OPC Server

h. Enhanced Functionality:

1) Provide functionality such that any of the following may be performed simultaneously on-line, and in any combination, via adjustable user-sized windows. Operator shall be able to drag and drop information between the following applications, reducing the number of steps to perform a desired function (e.g., Click on a point on the alarm screen and drag it to the dynamic trend graph application to initiate a dynamic trend on the desired point):

a) Dynamic color graphics application

b) Alarm management application

c) Scheduling application

d) Dynamic trend graph data plotter application

e) Dynamic system architecture diagram application

f) Control Program and Point database editing applications

g) Reporting applications

2) Report and alarm printing shall be accomplished via Windows Print Manager, allowing use of network printers.

i. Security: Operator-specific password access protection shall be provided to allow the administrator/manager to limit users' workstation control, display and data base manipulation capabilities as deemed appropriate for each user, based upon an assigned password. Operator privileges shall "follow" the operator to any workstation logged onto (up to 999 user accounts shall be supported). The administrator or manager shall be able to grant discrete levels of access and privileges, per user, for each point, graphic, report, schedule, and BMS workstation application. And each BMS workstation user account shall use a Windows Operating System user account as a foundation.

j. The operator interface software shall also include an application to track the actions of each individual operator, such as alarm acknowledgement, point commanding, schedule overriding, database editing, and logon/logoff. The application shall list each of the actions in a tabular format, and shall have sorting capabilities based on parameters such as ascending or descending time of the action, or name of the object on which the action was performed. The application shall also allow querying based on object name, operator, action, or time range.

k. Dynamic Color Graphics application shall include the following:

1) Must include graphic editing and modifying capabilities

2) A library of standard control application graphics and symbols must be included

3) Must be able to command points directly off graphics application

4) Graphic display shall include the ability to depict real-time point values dynamically with animation, picture/frame control, symbol association, or dynamic informational text-blocks

5) Navigation through various graphic screens shall be optionally achieved through a hierarchical "tree" structure

6) Graphics viewing shall include zoom capabilities

7) Graphics shall be capable of displaying the status of points that have been overridden by a field HAND switch, for points that have been designed to provide a field HAND override capability.

8) Advanced linking within the Graphics application shall provide the ability to navigate to outside documents (e.g., .doc, .pdf, .xls, etc.), Internet web addresses, e-mail, external programs, and other workstation applications, directly from the Graphics application window with a mouse-click on a customizable link symbol.

l. Reports shall be generated on demand or via pre-defined schedule, and directed to CRT displays, printers, file or email address. As a minimum, the system shall allow the user to easily obtain the following types of reports:

1) A general listing of all or selected points in the network

2) List of all points currently in alarm

3) List of all points currently in override status

4) List of all disabled points

5) List of all points currently locked out

6) List of user accounts and access levels

7) List all weekly schedules and events

8) List of holiday programming

9) List of control limits and deadbands

10) Custom reports from 3rd party software

11) System diagnostic reports including, list of Building panels on line and communicating, status of all Building terminal unit device points

12) List of programs

13) List of point definitions

14) List of logical point groups

15) List of alarm strategy definitions

16) List of Building Control panels

17) Point totalization report

18) Point Trend data listings

19) Initial Values report

20) User activity report

m. Scheduling and override

1) Provide a calendar type format for simplification of time and date scheduling and overrides of building operations. Schedule definitions reside in the PC workstation and in the Building Controller to ensure time equipment scheduling when PC is off-line, PC is not required to execute time scheduling. Provide override access through menu selection, graphical mouse action or function key. Provide the following capabilities as a minimum:

a) Weekly schedules

b) Zone schedules

c) Event schedules – an event consists of logical combinations of equipment and/or zones

d) Report schedules

e) Ability to schedule for a minimum of up to ten (10) years in advance.

2) Additionally, the scheduling application shall:

a) Provide filtering capabilities of schedules, based on name, time, frequency, and schedule type (event, zone, report)

b) Provide sorting capabilities of schedules, based on name, time and type of schedule (zone, event, report)

c) Provide searching capabilities of schedules based on name – with wildcarding options

n. Collection and Analysis of Historical Data

1) Provide trending capabilities that allow the user to easily monitor and preserve records of system activity over an extended period of time. Any system point may be trended automatically at time-based intervals (up to four time-based definitions per point) or change of value, both of which shall be user-definable. Trend data shall be collected stored on hard disk for future diagnostics and reporting. Automatic Trend collection may be scheduled at regular intervals through the same scheduling interface as used for scheduling of zones, events, and reports. Additionally, trend data may be archived to network drives or removable disk media for future retrieval.

2) Trend data reports shall be provided to allow the user to view all trended point data. Reports may be customized to include individual points or predefined groups of selected points. Provide additional functionality to allow predefined groups of up to 250 trended points to be easily transferred on-line to Microsoft Excel. BMS contractor shall provide custom designed spreadsheet reports for use by the owner to track energy usage and cost, equipment run times, equipment efficiency, and/or building environmental conditions. BMS contractor shall provide setup of custom reports including creation of data format templates for monthly or weekly reports.

3) Provide additional functionality that allows the user to view real-time trend data on trend graphical plot displays. A minimum of ten points may be plotted, of either real-time or historical data. The dynamic graphs shall continuously update point values. At any time the user may redefine sampling times or range scales for any point. In addition, the user may pause the display and take "snapshots" of plot screens to be stored on the workstation disk for future recall and analysis. Exact point values may be viewed and the graphs may be printed. A minimum of ten (10) dynamic

graphs shall run simultaneously. Operator shall be able to command points directly on the trend plot by double clicking on the point. Operator shall be able to zoom in on a specific time range within a plot. The dynamic trend plotting application shall support the following types of graphs, with option to graph in 3D: line graph, area graph, curve graph, area-curve graph, step graph, and scatter graph. Each graph may be customized by the user, for graph type, graph text, titles, line styles and weight, colors, and configurable x- and y-axes.

4) Provide additional functionality that allows the user to display trend data for points from a graphic, alarm status screen, or a displayed point log report.

o. Dynamic Color Graphic Displays

1) Capability to create color graphic floor plan displays and system schematics for each piece of mechanical equipment, including, but not limited to, air handling units, chilled water systems, hot water boiler systems, and room level terminal units.

2) The operator interface shall allow users to access the various system schematics and floor plans via a graphical penetration scheme, menu selection, point alarm association, or text-based commands. Graphics software shall permit the importing of Autocad or scanned pictures for use in the system.

3) Dynamic temperature values, humidity values, flow values and status indication shall be shown in their actual respective locations within the system schematics or graphic floor plan displays, and shall automatically update to represent current conditions without operator intervention and without pre-defined screen refresh rates.

a) Provide the user the ability to display real-time point values by animated motion or custom picture control visual representation. Animation shall depict movement of mechanical equipment, or air or fluid flow. Picture Control shall depict various positions in relation to assigned point values or ranges. A library (set) of animation and picture control symbols shall be included within the

operator interface software's graphics application. Animation shall reflect, ON or OFF conditions, and shall also be optionally configurable for up to five rates of animation speed.

b) Sizable analog bars shall be available for monitor and control of analog values; high and low alarm limit settings shall be displayed on the analog scale. The user shall be able to "click and drag" the pointer to change the setpoint.

c) Provide the user the ability to display blocks of point data by defined point groups; alarm conditions shall be displayed by flashing point blocks.

d) Equipment state or values can be changed by clicking on the associated point block or graphic symbol and selecting the new state (on/off) or setpoint.

e) State text for digital points can be user-defined up to eight characters.

f) Provide the user the ability to display trend data from the graphic screen through right click feature selection.

4) Colors shall be used to indicate status and change as the status of the equipment changes. The state colors shall be user definable.

5) Advanced linking within the Graphics application shall provide the ability to navigate to outside documents (e.g., .doc, .pdf, .xls, etc.), Internet web addresses, e-mail, external programs, and other workstation applications, directly from the Graphics application window with a mouse-click on a customizable link symbol.

6) The Windows environment of the PC operator workstation shall allow the user to simultaneously view several applications at a time to analyze total building operation or to allow the display of a graphic associated with an alarm to be viewed without interrupting work in progress.

7) Off the shelf graphic software shall be provided to allow the user to add, modify or delete system graphic background displays.

8) A clipart library of HVAC application and automation symbols shall be provided including fans, valves, motors, chillers, AHU systems, standard ductwork diagrams and laboratory symbols. The user shall have the ability to add custom symbols to the clipart library. The clipart library shall include a minimum of 400 application symbols. In addition, a library consisting of a minimum of 700 graphic background templates shall be provided.

9) The Graphics application shall include a set of standard Terminal Equipment controller application-specific background graphic templates. Templates shall provide the automatic display of a selected Terminal Equipment controller's control values and parameters, without the need to create separate and individual graphic files for each controller.

10) The graphic application shall provide a tool be able to change full or partial point names on a graphic.

p. System Configuration & Definition

1) A "Collapsible tree," dynamic system architecture diagram/display application of the site-specific BMS architecture showing status of controllers, PC workstations and networks shall be provided. This application shall include the ability to add and configure workstations, Building Controllers, as well as 3rd-party integrated components. Symbols/Icons representing the system architecture components shall be user-configurable and customizable, and a library of customized icons representing 3rd-party integration solutions shall be included. This application shall also include the functionality for real-time display, configuration and diagnostics connections to Building Controllers.

2) Network wide control strategies shall not be restricted to a single Building Controller, but shall be able to include data from any and all other network panels to allow the development of Global control strategies.

3) Provide automatic backup and restore of all Building controller databases on the workstation hard disk. In addition, all database changes shall be performed while the workstation is on-line without disrupting other system operations. Changes shall be automatically recorded and downloaded to the appropriate Building Controller. Changes made at the user-interface of Building Controllers shall be automatically uploaded to the workstation, ensuring system continuity.

4) System configuration, programming, editing, graphics generation shall be performed on-line.

5) Point database configuration shall be available to the user within a dedicated point database editor application included in the operator interface software. The editor shall allow the user to create, view existing, modify, copy, and delete points from the database.

6) The point editor shall have the capability to assign "informational text" to points as necessary to provide critical information about the equipment.

7) The point editor shall also allow the user to configure the alarm management strategy for each point. The editor shall provide the option for editing the point database in an online or offline mode with the Building Controllers.

8) The operator interface software shall also provide the capability to perform bulk modification of point definition attributes to a single or multiple user-selected points. This function shall allow the user to choose the properties to copy from a selected point to another point or set of points. The selectable attributes shall include, but are not limited to, Alarm management definitions and Trend definitions.

9) Control program configuration shall be available to the user within a dedicated control program editor application included in the operator interface software. The editor shall allow for creation, modification and deletion of control programs. The editor shall include a programming assistance feature that interactively guides the user through parameters required to generate a control program. The editor shall also include the ability to automatically compile the program to ensure its compatibility with the Building

Controllers. The editor shall provide the option for editing the control programs in an online or offline mode, and also the ability to selectively enable or disable the live program execution within the Building Controllers. Additional compiler checks shall be built into the program editor which assists in the verification of valid GOTO statements. The additional compiler check shall also verify if each point in the program was defined in an other panel.

q. Alarm Management

1) Alarm Routing shall allow the user to send alarm notification to selected printers or workstation location(s) based on time of day, alarm severity, or point type.

2) Alarm Notification shall be presented to each workstation in a tabular format application, and shall include the following information for each alarm point: name, value, alarm time & date, alarm status, priority, acknowledgement information, and alarm count. Each alarm point or priority shall have the ability to sound a discrete audible notification.

3) Alarm Display shall have the ability to list & sort the alarms based on alarm status, point name, ascending or descending alarm time.

4) Directly from the Alarm Display, the user shall have the ability to acknowledge, silence the alarm sound, print, or erase each alarm. The interface shall also have the option to inhibit the erasing of active acknowledged alarms, until they have returned to normal status. The user shall also have the ability to command, launch an associated graphic or trended graphical plot, or run a report on a selected alarm point directly on the Alarm Display.

5) Each alarm point shall have a direct link from the Alarm Display to further user-defined point informational data. The user shall have the ability to also associate real-time electronic annotations or notes to each alarm.

6) Alarm messages shall be customizable for each point, or each alarm priority level, to display detailed instructions to the user regarding actions to take in the event of an alarm. Alarm messages shall also have the optional ability to

individually enunciate on the workstation display via a separate pop-up window, automatically being generated as the associated alarm condition occurs. The system shall have the ability to modify the priority text based on operator preference.

7) Alarm Display application shall allow workstation operators to send and receive real-time messages to each other, for purposes of coordinating Alarm and BMS system management.

2.04 Building Controller Software

A. General

1. Furnish the following applications software to form a complete operating system for building and energy management as described in this specification.

2. The software programs specified in this Section shall be provided as an integral part of Building Controllers and shall not be dependent upon any higher level computer or another controller for execution.

3. All points, panels and programs shall be identified by a 30 character name. All points shall also be identified by a 16 character point descriptor. The same names shall be displayed at both Building Controller and the Operator Interface.

4. All digital points shall have a user defined two-state status indication with 8 characters minimum (e.g. Summer, Enabled, Disabled, Abnormal).

5. Building Controllers shall have the ability to perform energy management routines including but not limited to time of day scheduling, calendar-based scheduling, holiday scheduling, temporary schedule overrides, start stop time optimization, automatic daylight savings time switch over, night setback control, enthalpy switch over, peak demand limiting, temperature-compensated duty cycling, heating / cooling interlock, supply temperature reset, priority load shedding, and power failure restart.

6. The Building Controllers shall have the ability to perform the following pre tested control algorithms:

a. Two position control

b. Proportional control

c. Proportional plus integral control

d. Proportional, integral, plus derivative control

e. Automatic tuning of control loops

f. Model-Free Adaptive Control

7. Each controller shall be provided with an interactive HELP function to assist operators using POTs and remote connected operators.

B. System Security

1. User access shall be secured using individual security passwords and user names.

2. Passwords shall restrict the user to the objects, applications, and system functions as assigned by the system manager.

3. User Log On / Log Off attempts shall be recorded.

4. The system shall protect itself from unauthorized use by automatically logging off following the last keystroke. The delay time shall be user-definable.

5. Use of workstation resident security as the only means of access control is not an acceptable alternative to resident system security in the field panel.

C. User Defined Control Applications

1. Controllers shall be able to execute custom, job-specific processes defined by the user, to automatically perform calculations and special control routines.

2. It shall be possible to use any system measured point data or status, any system calculated data, a result from any process, or any user-defined constant in any controller in the system.

3. Any process shall be able to issue commands to points in any and all other controllers in the system.

4. Processes shall be able to generate operator messages and advisories to other operator I/O devices. A process shall be able to directly send a

message to a specified device or cause the execution of a dial-up connection to a remote device such as a printer or pager.

5. Each controller shall support plain language text comment lines in the operating program to allow for quick troubleshooting, documentation, and historical summaries of program development.

6. Controller shall provide a HELP function key, providing enhanced context sensitive on-line help with task oriented information from the user manual.

D. Alarm Management

1. Alarm management shall be provided to monitor and direct alarm information to operator devices. Each Building Controller shall perform distributed, independent alarm analysis and filtering to minimize operator interruptions due to non-critical alarms, minimize network traffic and prevent alarms from being lost. At no time shall the Building Controllers ability to report alarms be affected by either operator or activity at a PC workstation, local I/O device or communications with other panels on the network.

2. Conditional alarming shall allow generation of alarms based upon user defined multiple criteria.

3. An Alarm “shelving” feature shall be provided to disable alarms during testing. (Pull the Plug, etc.).

4. Binary Alarms. Each binary object shall be set to alarm based on the operator-specified state. Provide the capability to automatically and manually disable alarming.

5. Analog Alarms. Each analog object shall have both high and low alarm limits. Alarming must be able to be automatically and manually disabled.

6. All alarm or point change reports shall include the point's user defined language description and the time and date of occurrence.

7. The user shall be able to define the specific system reaction for each point. Alarms shall be prioritized to minimize nuisance reporting and to speed operator response to critical alarms. A minimum of six priority levels shall be provided for each point. Point priority levels shall be combined with user definable destination categories (PC, printer, Building Controller, etc.) to provide full flexibility in defining the handling of system alarms. Each Building Controller shall automatically inhibit the

reporting of selected alarms during system shutdown and start-up. Users shall have the ability to manually inhibit alarm reporting for each point.

8. Alarm reports and messages shall be routed to user-defined list of operator workstations, or other devices based on time and other conditions. An alarm shall be able to start programs, print, be logged in the event log, generate custom messages, and display graphics.

9. In addition to the point's descriptor and the time and date, the user shall be able to print, display or store a 200 character alarm message to more fully describe the alarm condition or direct operator response.

    a. Each Building Controller shall be capable of storing a library of at least 50 alarm messages. Each message may be assignable to any number of points in the Controller.

10. Operator-selected alarms shall be capable of initiating a call to a remote operator device.

E. Scheduling

1. Provide a comprehensive menu driven program to automatically start and stop designated object or group of objects in the system according to a stored time.

2. Schedules shall reside in the building controller and shall not rely on external processing or network.

3. It shall be possible to define a group of objects as a custom event (i.e. meeting, athletic activity, etc.). Events can then be scheduled to operate all necessary equipment automatically.

4. For points assigned to one common load group, it shall be possible to assign variable time delays between each successive start and/or stop within that group.

5. The operator shall be able to define the following information:

    a. Time, day

    b. Commands such as on, off, auto, etc.

    c. Time delays between successive commands.

d. There shall be provisions for manual overriding of each schedule by an authorized operator.

6. It shall be possible to schedule calendar-based events up to one year in advance based on the following:

a. Weekly Schedule. Provide separate schedules for each day of the week. Each of these schedules should include the capability for start, stop, optimal start, optimal stop, and night economizer. When a group of objects are scheduled together as an Event, provide the capability to adjust the start and stop times for each member.

b. Exception Schedules. Provide the ability for the operator to designate any day of the year as an exception schedule. Exception schedules may be defined up to a year in advance. Once an exception schedule is executed, it will be discarded and replaced by the standard schedule for that day of the week.

c. Holiday Schedules. Provide the capability for the operator to define up to 99 special or holiday schedules. These schedules may be placed on the scheduling calendar and will be repeated each year. The operator shall be able to define the length of each holiday period.

F. Automatic Daylight Savings Time Switchover: The system shall provide automatic time adjustment for switching to/from Daylight Savings Time.

G. Night setback control. The system shall provide the ability to automatically adjust setpoints for night control.

H. Enthalpy switchover (economizer). The Building Controller Software (BCS) shall control the position of the air handler relief, return, and outside air dampers. If the outside air dry bulb temperature falls below changeover set point the BCS will modulate the dampers to provide 100 percent outside air. The user will be able to quickly changeover to an economizer system based on dry bulb temperature and will be able to override the economizer cycle and return to minimum outside air operation at any time.

I. Loop Control. A Model-Free Adaptive Control algorithm or alternatively a PID (proportional-integral-derivative) closed-loop control algorithm with direct or reverse action and anti-windup shall be supplied. The algorithm shall calculate a time-varying analog value that is used to position an output or stage a series of

outputs. The controlled variable, set point, and weighting parameters shall be user-selectable.

J. Sequencing. Provide application software based upon the sequences of operation specified to properly sequence equipment.

K. Staggered Start

1. This application shall prevent all controlled equipment from simultaneously restarting after a power outage. The order in which equipment (or groups of equipment) is started, along with the time delay between starts, shall be user definable.

2. Upon the resumption of power, each Building Controller shall analyze the status of all controlled equipment, compare it with normal occupancy scheduling and turn equipment on or off as necessary to resume normal operations.

L. Totalization

1. Run-Time Totalization. Building Controllers shall automatically accumulate and store run-time hours for all digital input and output points. A high runtime alarm shall be assigned, if required, by the operator.

2. Consumption totalization. Building Controllers shall automatically sample, calculate and store consumption totals on a daily, weekly or monthly basis for all analog and digital pulse input type points.

3. Event totalization. Building Controllers shall have the ability to count events such as the number of times a pump or fan system is cycled on and off. Event totalization shall be performed on a daily, weekly or monthly basis for all points. The event totalization feature shall be able to store the records associated with events before reset.

M. Data Collection

1. A variety of historical data collection utilities shall be provided to manually or automatically sample, store, and display system data for all points.

2. Building Controllers shall store point history data for selected analog and digital inputs and outputs:

a. Any point, physical or calculated may be designated for trending. Any point, regardless of physical location in the network, may be collected and stored in each Building Controllers point group.

3. Trend data shall be stored at the Building Controllers and uploaded to the workstation when retrieval is desired. Uploads shall occur based upon either user-defined interval, manual command or when the trend buffers are full. All trend data shall be available for use in 3rd party personal computer applications.

4. Loop Tuning. Building Controllers shall also provide high resolution sampling capability for verification of DDC control loop performance. Documented evidence of tuned control loop performance shall be provided on a <monthly, seasonal, quarterly, annual> period.

a. For Model-Free Adaptive Control loops, evidence of tuned control loop performance shall be provided via graphical plots or trended data logs. Graphical plots shall minimally include depictions of setpoint, process variable (output), and control variable (e.g., temperature). Other parameters that may influence loop control shall also be included in the plot (e.g., fan on/off, mixed-air temp).

b. For PID control loops, operator-initiated automatic and manual loop tuning algorithms shall be provided for all operator-selected PID control loops. Evidence of tuned control loop performance shall be provided via graphical plots or trended data logs for all loops.

1) In automatic mode, the controller shall perform a step response test with a minimum one-second resolution, evaluate the trend data, calculate the new PID gains and input these values into the selected LOOP statement.

2) Loop tuning shall be capable of being initiated either locally at the Building Controller, from a network workstation or remotely using dial-in modems. For all loop tuning functions, access shall be limited to authorized personnel through password protection.

2.05 Building Controllers

A. Building Controllers shall be 32 bit, multi-tasking, multi-user, real-time 48 MHz digital control processors consisting of modular hardware with plug-in enclosed

processors, communication controllers, power supplies and input/output point modules. Controller size shall be sufficient to fully meet the requirements of this specification and the attached point list.

B. Each Building Controller shall support a minimum of 3 directly connected Secondary Networks.

C. Each Building Controller shall have sufficient memory, a minimum of 72 megabyte, to support its own operating system and databases, including control processes, energy management applications, alarm management applications, historical/trend data for points specified, maintenance support applications, custom processes, operator I/O, and dial-up communications.

D. Building Controller shall have an integral real-time clock.

E. Each Building Controller shall support firmware upgrades without the need to change hardware.

F. Each Building Controller shall support:

1. Monitoring of industry standard analog and digital inputs, without the addition of equipment outside the Building Controller cabinet.

2. Monitoring of industry standard analog and digital outputs, without the addition of equipment outside the Building Controller cabinet.

G. Spare Point Capacity.

1. Each Building Controller shall have a minimum of 10 percent spare point capacity.

2. The type of spares shall be in the same proportion as the implemented I/O functions of the panel, but in no case shall there be less than one spare of each implemented I/O type.

3. Provide all processors, power supplies, and communication controllers so that the implementation of adding a point to the spare point location only requires the addition of the appropriate:

a. Expansion modules
b. Sensor/actuator
c. Field wiring/tubing.

H. Serial Communication. Building Controllers shall provide at least two EIA-232C serial data communication ports for operation of operator I/O devices such as

industry standard printers, operator terminals, and portable laptop operator's terminals. Building Controllers shall allow temporary use of portable devices without interrupting the normal operation of permanently connected printers or terminals.

I. I/O Status and Indication. Building Controllers shall provide local LED status indication for each digital input and output for constant, up-to-date verification of all point conditions without the need for an operator I/O device. Graduated intensity LEDs or analog indication of value shall also be provided for each analog output. All wiring connections shall be made to field-removable terminals.

J. Self Diagnostics. Each Building Controller shall continuously perform self diagnostics, communication diagnosis, and diagnosis of all panel components. The Building Controller shall provide both local and remote annunciation of any detected component failures, low battery conditions or repeated failure to establish communication for any system.

K. Power loss. In the event of the loss of power, there shall be an orderly shutdown of all Building Controllers to prevent the loss of database or operating system software. Non-volatile memory shall be incorporated for all critical controller configuration data and battery backup shall be provided to support the real-time clock and all volatile memory for a minimum of 100 hours.

L. Environment.

1. Controller hardware shall be suitable for the anticipated ambient conditions.

2. Controllers used outdoors and/or in wet ambient conditions shall be mounted within waterproof enclosures and shall be rated for operation at 0°C to 49°C (32°F to 120°F).

3. Controllers used in conditioned space shall be mounted in dust-proof enclosures and shall be rated for operation at 0°C to 49°C (32°F to 120°F).

M. Immunity to power and noise.

1. Controller shall be able to operate at 90% to 110% of nominal voltage rating and shall perform an orderly shutdown below 80% nominal voltage.

a. Operation shall be protected against electrical noise of 5 to 120 Hz and from keyed radios up to 5 W at 1 m (3 ft).

2. Isolation shall be provided at all primary network terminations, as well as all field point terminations to suppress induced voltage transients consistent with:

   a. RF-Conducted Immunity (RFCI) per ENV 50141 (IEC 1000-4-6) at 3 V

   b. Electro Static Discharge (ESD) Immunity per EN 61000-4-2 (IEC 1000-4-2) at 8 kV air discharge, 4 kV contact

   c. Electrical Fast Transient (EFT) per EN 61000-4-4 (IEC 1000-4-4) at 500 V signal, 1 kV power

   d. Output Circuit Transients per UL 864 (2,400V, 10A, 1.2 Joule max)

3. Isolation shall be provided at all Building Controller's AC input terminals to suppress induced voltage transients consistent with:

   a. IEEE Standard 587 1980

   b. UL 864 Supply Line Transients

   c. Voltage Sags, Surge, and Dropout per EN 61000-4-11 (EN 1000-4-11)

N. Minimum Approved Building Controllers.

1. BMS Contractors shall furnish Building Controllers as listed below. Providing an approved controller does not release the contractor from meeting all performance, software and hardware specifications for Building Controllers and system operations.

2. Siemens Building Technologies Inc. – PXC/PXM /Equipment Controllers (MEC).

2.06 Application Specific Controllers (ASC)

A. General

1. Provide for control of each piece of equipment , including, but not limited to the following:

2. Each Building Controller shall be able to communicate with application specific controllers (ASCs) over the Secondary Network to control terminal equipment only.

3. The use of Secondary Network controllers with custom program applications to control AHU's, water systems, etc. is not acceptable.

4. Each ASC shall operate as a stand-alone controller capable of performing its specified control responsibilities independently of other controllers in the network. Each ASC shall be a microprocessor-based, multi-tasking, real-time digital control processor.

5. Each ASC shall include all point inputs and outputs necessary to perform the specified control sequences. The ASC shall accept input and provide output signals that comply with industry standards. Controllers utilizing proprietary control signals shall not be acceptable. Outputs utilized either for two-state, modulating floating, or proportional control, allowing for additional system flexibility.

6. Space Temperature Sensors. Each controller performing space temperature control shall be provided with a matching room temperature sensor.

   a. Wired Sensor specifications. The sensor may be either RTD or thermistor type providing the following.

      1) Accuracy: + .5 F

      2) Operating Range: 35 to 115 F

      3) Set Point Adjustment Range: 55 to 95 F

      4) Calibration Adjustments: None required

      5) Installation: Up to 100 ft. from controller

6) Auxiliary Communications Port: as required

7) Local LCD Temperature Display: as required

8) Set Point Adjustment Dial as required

9) Occupancy Override Switch as required

b. Set Point Modes:

1) Independent Heating, Cooling

2) Night Setback-Heating

3) Night Setback-Cooling

c. Auxiliary Communication Port. Each room temperature sensor shall include a terminal jack integral to the sensor assembly. The terminal jack shall be used to connect a portable operator's terminal to control and monitor all hardware and software points associated with the controller. RS-232 communications port shall allow the operator to query and modify operating parameters of the local room terminal unit from the portable operator’s terminal.

d. LCD Display. Interactive, two- line liquid crystal display shall allow the operator to query and modify operating parameters of the local room terminal unit from the room sensor. The display shall indicate the space temperature and associated ASC point when not being used to query or modify operating parameters.

e. Set Point Adjustment Dial. The set point adjustment dial shall allow for modification of the temperature by the building operators. Set point adjustment may be locked out, overridden, or limited as to time or temperature through software by an authorized operator at any central workstation, Building Controller, room sensor two-line display, or via the portable operator's terminal.

f. Override Switch. An override switch shall initiate override of the night setback mode to normal (day) operation when activated by the occupant and enabled by building operators. The override shall be limited to two (2) hours (adjustable.) The override function may be locked out, overridden, or limited through software by an authorized operator at the operator interface, Building Controller,

room sensor two-line display or via the portable operator's terminal.

7. Communication. Each controller shall perform its primary control function independent of other Secondary Network communication, or if Secondary Network communication is interrupted. Reversion to a fail-safe mode of operation during Secondary Network interruption is not acceptable.

8. Control Algorithms. The controller shall receive its real-time data from the Building Controller time clock to insure Secondary Network continuity. Each controller shall include algorithms incorporating proportional, integral and derivative (PID) gains for all applications. All PID gains and biases shall be field-adjustable by the user via room sensor LCD or the portable operator’s terminal as specified herein. Controllers that incorporate proportional and integral (PI) control algorithms only shall not be acceptable.

9. Control Applications. Operating programs shall be field-selectable for specific applications. In addition, specific applications may be modified to meet the user's exact control strategy requirements, allowing for additional system flexibility. Controllers that require factory changes of all applications are not acceptable.

10. Calibration. Each controller shall include provisions for manual and automatic calibration of the differential pressure transducer in order to maintain stable control and insuring against drift over time.

    a. Manual calibration may be accomplished by either commanding the actuator to 0% via the POT or by depressing the room sensor override switch. Calibration of the transducer at the controller location shall not be necessary

    b. Calibration shall be accomplished by stroking the terminal unit damper actuator to a 0% position so that a 0 CFM air volume reading is sensed. The controller shall automatically accomplish this whenever the system mode switches from occupied to unoccupied or vice versa.

    c. Calibration shall be accomplished by zeroing out the pressure sensor and holding damper at last known position until calibration is complete. The controller shall automatically accomplish this whenever the system mode switches from occupied to unoccupied or vice versa.

11. Memory.

    a. Provide each ASC with sufficient memory to accommodate point databases, operating programs, local alarming and local trending. All databases and programs shall be stored in non-volatile EEPROM, EPROM and PROM, or minimum of 72-hour battery backup shall be provided. The controllers shall be able to return to full normal operation without user intervention after a power failure of unlimited duration.

    b. Upon replacement, new ASCs shall recover control function and site specific defaults automatically and resume normal operation.

12. Power Supply. The ASCs shall be powered from a 24 VAC source and shall function normally under an operating range of 18 to 28 VAC, allowing for power source fluctuations and voltage drops. Power supply for the ASC must be rated at a minimum of 125% of ASC power consumption and shall be of the fused or current limiting type. The BMS contractor shall provide 24 VAC power to the terminal units by utilizing:

    a. The existing line voltage power trunk and installing separate isolation transformers for each controller

    b. Dedicated line voltage power source and isolation transformers at a central location and installing 24VAC power trunk to supply multiple ASCs in the area.

13. Environment. The controllers shall function normally under ambient conditions of 32 to 122 F (0 to 50 C) and 10% to 95%RH (non-condensing). Provide each controller with a suitable cover or enclosure to protect the circuit board assembly.

14. Immunity to noise. Operation shall be protected against electrical noise of 5-120 Hz and from keyed radios up to 5 W at 1 m (3 ft).

15. Manufacturer Installed Controls.

    a. BMS manufacturer shall furnish ASC and actuator for factory mounting to equipment manufacturer.

    b. Cost of factory mounting shall be borne by equipment manufacturer.

c. For VAV terminals, equipment manufacturer shall provide and install flow-cross sensor, 24 Vac transformer, controls enclosure, fan relay, SCR and factory install, wire and tube ASC controller and actuator.

d. Fan powered VAV terminals shall be equipped with a fan speed controller and relay to change summer and winter speed set point.

2.07 Input/Output Interface:

A. Hardwired inputs and outputs may tie into the system through building or application specific controllers.

B. All input points and output points shall be protected such that shorting of the point to itself, to another point, or to ground will cause no damage to the controller. All input and output points shall be protected from voltage up to 24 V of any duration, such that contact with this voltage will cause no damage to the controller.

C. Binary inputs shall allow the monitoring of On/Off signals from remote devices. The binary inputs shall provide a wetting current of at least 12 mA to be compatible with commonly available control devices and shall be protected against the effects of contact bounce and noise. Binary inputs shall sense “dry contact” closure without external power (other than that provided by the controller) being applied.

D. Pulse accumulation input objects. This type of object shall conform to all the requirements of binary input objects and also accept up to 10 pulses per second for pulse accumulation.

E. Analog inputs shall allow the monitoring of low-voltage (0 to 10 VDC), current (4 to 20 mA), or resistance signals (thermistor, RTD). Analog inputs shall be compatible with—and field configurable to— commonly available sensing devices.

F. Binary outputs shall provide for On/Off operation or a pulsed low-voltage signal for pulse width modulation control. Binary outputs on building and custom application controllers shall have three-position (On/Off/Auto) override switches and status lights. Outputs shall be selectable for either normally open or normally closed operation.

G. Analog outputs shall provide a modulating signal for the control of end devices. Outputs shall provide either a 0 to 10 VDC, 4 to 20 mA or 0-20 PSI signal as required to provide proper control of the output device. Analog outputs on building or custom application controllers shall have status lights and a two-position (AUTO/MANUAL) switch and manually adjustable potentiometer for

manual override. Analog outputs shall not exhibit a drift of greater than 0.4% of range per year.

H. Tri-State Outputs. Provide tri-state outputs (two coordinated binary outputs) for control of three-point floating type electronic actuators without feedback. Use of three-point floating devices shall be limited to zone control and terminal unit control applications (VAV terminal units, duct-mounted heating coils, zone dampers, radiation, etc.). Control algorithms shall run the zone actuator to one end of its stroke once every 24 hours for verification of operator tracking.

I. System Object Capacity. The system size shall be expandable to at least twice the number of input/ output objects required for this project. Additional controllers (along with associated devices and wiring) shall be all that is necessary to achieve this capacity requirement. The operator interfaces installed for this project shall not require any hardware additions or software revisions in order to expand the system.

2.08 Power Supplies and Line Filtering

A. Control transformers shall be UL listed. Furnish Class 2 current-limiting type or furnish over-current protection in both primary and secondary circuits for Class 2 service in accordance with NEC requirements. Limit connected loads to 80% of rated capacity.

B. DC power supply output shall match output current and voltage requirements. Unit shall be full-wave rectifier type with output ripple of 5.0 mV maximum peak-to-peak. Regulation shall be 1.0% line and load combined, with 100-microsecond response time for 50% load changes. Unit shall have built-in over-voltage and over-current protection and shall be able to withstand a 150% current overload for at least three seconds without trip-out or failure.

1. Unit shall operate between 0°C and 50°C (32°F and 120°F). EM/RF shall meet FCC Class B and VDE 0871 for Class B and MILSTD 810C for shock and vibration.

2. Line voltage units shall be UL recognized and CSA approved.

C. Power line filtering.

1. Provide transient voltage and surge suppression for all workstations and controllers either internally or as an external component. Surge protection shall have the following at a minimum:

a. Dielectric strength of 1000 volts minimum

b. Response time of 10 nanoseconds or less

c. Transverse mode noise attenuation of 65 dB or greater

d. Common mode noise attenuation of 150 dB or better at 40 Hz to 100 Hz.

2.09 Auxiliary Control Devices

A. General

1. Specified in this section are the following hard wired input/output devices connected to the Building Controller or ASC.

a. Automatic Dampers
b. Fire/Smoke Dampers
c. Electric Damper Actuators
d. Pneumatic Damper/valve Actuators
e. Motorized Isolation Valves
f. Ball Valves
g. Automatic Control Valves
h. Airflow Measuring Stations
i. Binary Temperature Devices
j. Temperature Sensors
k. Dew Point/Humidity Sensors
l. Pressure Sensors
m. Water Differential Pressure Sensors
n. Differential Pressure Switches
o. Analog Water Level Sensors
p. Water Leak Detection Systems
q. Audio/Visual Alarm Units
r. Fuel Oil Meters
s. Water BTU Meters
t. Vortex Shedding Flow Meters
u. Indoor Air Quality (CO2/VOC) Space Sensors
v. Relays
w. Override Timers
x. Current Transformers
y. Voltage Transmitters
z. Voltage Transformers
aa. Power Monitors
bb. Current Switches
cc. Pressure Electric Switches
dd. Electro-pneumatic Transducers
ee. Local Control panels

ff. Local User Display

2. Specified in this section are the following devices connected to the BMS using secondary network communication.

   a. Water BTU Meters
   b. Variable Frequency Drives (VFD)
   c. Indoor Air Quality (CO2/VOC) Space Sensors
   d. Power Monitors

B. Automatic Dampers

1. Dampers shall have 13 gauge galvanized frames of not less than 3" in width and blades of 14 gauge, equivalent thickness, galvanized steel roll formed airfoil type for low pressure drop and low noise generation and shall be adequately braced to from a rigid assembly where required in galvanized duct work. Dampers shall have blades not more 8" wide. Linkage and hardware shall be zinc plated steel and shall be concealed out of airstream within the damper frame. Damper blades and rods shall be installed in horizontal position.

2. In copper, aluminum and stainless steel duct work, damper material shall match the duct work material.

3. All dampers shall be of the proportioning or opposed blade type, and shall be motor operated. Dampers shall have continuous elastomer or stainless steel stops to avoid leakage. Bearings shall be corrosion resistant oil tight stainless steel sleeve type. All dampers shall be provided with continuous 3/16" x ½" closed cell neoprene gasket around perimeter of the frame and at interlocking blade edges to form an air tight seal. Blade seals shall be suitable for -76□ F to 350□F mechanically locked into blade edge. Adhesive of clip on type are not acceptable. Axles shall be square or hexagonal positively locked into damper blade. Linkage shall be concealed out of airstream within the damper blade.

4. All dampers shall be constructed to provide a maximum leakage of 3-1/2%, with an approach velocity of 1500 fpm when closed against a pressure of 4 inches of water. Submit leakage and flow characteristic data for all dampers.

5. All outside air dampers, with the exception of the emergency generator dampers, shall automatically close in the event of a loss of power. Dampers on emergency generators shall automatically open on a loss of power.

6. All smoke dampers shall be constructed in accordance with UL standard 555S.

7. Dampers shall be Ruskin Model CD60, Imperial Model 800 or approved equal.

C. Fire/Smoke Dampers

1. Dampers shown on drawings designated as "F/SM" shall comply with the following. They shall have a U.L. label. Dampers shall be pneumatically operated combination fire and smoke Ruskin, Imperial or approved equal, provided with factory installed U.L. rated full sleeves. Provide air foil or "V" blade damper blades supported with shafts and stainless steel bearings to allow daily operation. Provide intermediate supports and bearings for damper blades more than 36" long. They shall conform to UL Standard 555 and 555S as leakage rated dampers in smoke control systems when closed shall be the equivalent of a 1-1/2 hour fire damper. Leakage shall conform to Class 2 with maximum leakage of 10 CFM/Sq. Ft. at 1" W.G. Damper actuators shall be provided with position indicator switches to enable remote status of open or closed positions (only those dampers designated in the electrical trade plans and specifications will be provided with position switches and will be wired for remote status and remote open/closed operation, but all dampers will be provided with position indicators for possible future use). Note that dampers which are controlled from a central fire command station shall be provided with a 212□F heat sensor with normally closed contacts (manual reset) to close and lock damper if open. Additionally, dampers shall be factory equipped with a second normally closed heat sensor correlating to the operator/actuator degradation temperature classification (250□F to 350□F, depending on actuator utilized). The second sensor is wired through a manual override switch on the central fire command station. Dampers which are not controlled from a central fire command station shall have a fusible link which melts on heat causing damper to close and lock in a closed position. The following will be accepted in lieu of the two firestats described. A resettable bimetallic link which opens on heat permitting damper to close and lock if open. This link may be re-engaged from fire command station at temperature of 150□F or less.

2. Dampers shown on drawings designated "SM" shall comply in all respects to F/S damper description including position indicating switches except they shall not be provided with a heat sensor or fusible link.

D. Electric Damper Actuators

1. General

   a. The actuator shall have mechanical or electronic stall protection to prevent damage to the actuator throughout the rotation of the actuator.

   b. Where shown, for power-failure/safety applications, an internal mechanical, spring-return mechanism shall be built into the actuator housing. Alternatively, an uninterruptible power supply (UPS) may be provided. On terminal unit valves actuators capacitor driven fail action is permitted.

   c. Proportional actuators shall accept a 0 to 10 VDC or 0 to 20 mA control signal and provide a 2 to 10 VDC or 4 to 20 mA operating range.

   d. All 24 VAC/VDC actuators shall operate on Class 2 wiring.

   e. All actuators shall have an external manual gear release to allow manual positioning of the damper when the actuator is not powered. Spring-return actuators with more than 7 Nm (60 in.-lb) torque capacity shall have a manual crank for this purpose.

   f. Electric actuators for emergency generator damper control shall be rated for 350 degree F. maximum operating temperature and capable to drive fully open and close within 15 seconds.

E. Pneumatic damper/valve actuators

1. Pneumatic actuators shall be piston-rolling diaphragm type or diaphragm type with easily replaceable, beaded, molded neoprene diaphragm.

2. Actuator housings may be molded or die-cast zinc or aluminum.

3. Actuator size and spring ranges selected shall be suitable for intended application.

4. Rate pneumatic actuators for a minimum 140 kPa (20 psig).

5. Damper actuators shall be selected in accordance with manufacturer's recommendations to provide sufficient close-off force to effectively seal damper and to provide smooth modulating control under design flow and pressure conditions. Furnish a separate actuator for each damper section.

6. Valve actuators shall provide tight close off at design system pressure and shall provide smooth modulation at design flow and pressure conditions.

7. On sequencing applications, valve and damper actuators shall be sized for a maximum of 14 kPa (2 psi) shift in nominal spring range. Spring ranges shall be selected to prevent overlap or positive positioners shall be provided.

8. Positive positioners to have the following performance characteristics:

   a. Linearity: ±10% of output signal span
   b. Hysteresis: 3% of the span
   c. Response: 1/4 psig input change
   d. Maximum pilot signal pressure: 140 kPa (20 psig)
   e. Maximum control air supply pressure: 420 kPa (60 psig)

9. Positive positioners shall be provided on actuators for inlet vane control and on any other actuators where required to provide smooth modulation or proper sequencing.

10. Positive positioners shall be high-capacity force balance relay type with suitable mounting provisions and position feedback linkage tailored for particular actuator.

11. Positive positioners shall use full control air pressure at any point in stem travel to initiate stem movement or to maintain stem position. Positioners shall operate on a 20 to 100 kPa (3 to 15 psig) input signal unless otherwise required to satisfy the control sequences of operation.

12. All actuators shall be designed and manufactured using ISO900registered procedures, and shall be Listed under Standards UL873 and CSA22.2 No. 24-93

F. Motorized isolation valves

1. Butterfly Valves.

   a. Furnish automatic butterfly valves for isolation requirements as shown on the drawings or required herein. All butterfly valves shall have body ratings in accordance with the piping specifications. Valves shall be high performance, fully lugged with carbon steel body ANSI 150/300. Valves shall be rated for bubble tight dead end closure, with 316 stainless steel disc, stainless steel shaft and reinforced Teflon seat and seals.

b. Motorized valves located outdoors or in areas subject to outdoor air conditions provide fail in place, electric operators with water proof enclosure, crankcase heater, and open and closed position limit switches. Valve and all accessories shall be constructed for outdoor use. All electrical devices shall be weather proof and NEMA 4 rated.

c. All valves shall be provided with external position indicators and a speed control device to prevent to rapid closure.

d. All valves shall be provided with manual override hand wheels for operating the valve.

e. The valves shall be line size as shown on plans.

f. Motorized isolation valves shall be Jamesbury 815/830L, Fisher, DeZurik Model HP II or Bray.

G. Ball Valves

1. Furnish automatic full port ball valves for isolation requirements on line sizes up to 2'as shown on the drawings or required herein. All ball valves shall have ANSI 250 body rating. Valves shall bronze body and stainless steel trim.

2. Valves shall close against a differential pressure equal to the design pump head pressure plus 10%.

3. The valves shall fail to their safe position upon power loss as specified in the sequence of operation.

4. All valves shall be provided with manual override.

5. Provide valve position indicator end switches with the actuator.

6. The valves shall be line size as shown on plans.

7. Motorized isolation valves shall be Neptronic, Dezurik or Siemens.

H. Automatic Control Valves

1. General:

a. Control valves shall be two-way or three-way type single seated globe type for two-position or modulating service as shown. Valves shall meet ANSI Class IV leakage rating.

b. Body pressure rating and connection type construction shall conform to pipe, fitting and valve schedules. Where pressure and flow combinations exceed ratings for commercial valves and operators, industrial class valves and operators shall be provided.

c. Valve operators shall be of pneumatic or electric type.

d. The valves shall be quiet in operation and fail-safe in either normally open or normally closed position in the event of power failure.

e. Control valve operators shall be sized to close against a differential pressure equal to the design pump head plus 10 percent.

f. Furnish differential pressure control valves for all water systems as shown on plans and/or specified in the sequence of operations.

g. Provide valves 2" and smaller with screwed end bronze bodies and stainless steel trim. Provide valves 2-1/2" and larger with flanged ends, cast iron body and stainless steel trim.

h. For modulating service that require large valve size (above 6”), such as cooling tower temperature bypass, chiller head pressure ,etc. where proper control with globe type control valve cannot be achieved or the application is not economical butterfly or v-port ball valves are allowed.

2. Water Valves:

a. Control valves shall be of equal percentage flow characteristics for modulating service.

b. Sizing Criteria:

3. Steam Valves:

a. Control valves shall be of linear flow characteristics for modulating service.

b. Sizing Criteria:

I. Air Flow Measuring Stations

1. Fan Inlet Type:

a. Provide where indicated on the plans, airflow measuring stations of fan inlet type. Airflow traverse probes shall be suitable for mounting in the inlet bell(s) of the indicated fan.

b. Probes shall be provided with the appropriate end support brackets for mounting in the inlet bell(s). Where fans are of dual inlet type, two sets of inlet probes must be provided.

c. Fan inlet probes shall be provided with the fittings to allow for the connection of control tubing to the probe assemblies.

d. Probes shall be capable of operating with an accuracy of 3% of actual volume over the fan operating range.

e. The installation of the air flow measuring stations shall be coordinated with sheet metal contractor to ensure actual accuracy and accessibility for maintenance.

f. The installation of the air flow measuring stations shall be coordinated with sheet metal contractor to ensure actual accuracy and accessibility for maintenance.

g. Fan inlet probes shall be Tek-Air T-FP7000.

2. Duct Mounted Type:

a. Provide where indicated on the plans, airflow traverse probes of the insertion type, capable of continuously measuring air volume in the duct served.

b. Probes shall utilize multiple total and suction pressure measurement points, located along the length of the probe surface in accordance with ASHRAE recommendations for duct traversing.

c. The probes shall provide measurement accuracy within ± 2% of actual velocity when used with the appropriate conversion formula.

d. Probes shall be of cylindrical cross section and shall indicate no more than a ± 3% percent deviation from the centerline velocity at a yaw angles up to 30 degrees.

e. Probes shall be constructed of extruded aluminum, unless dictated otherwise by service requirements. Probes over sixteen inches long shall be supported on the insertion end.

f. Probe quantities for each location shall be sufficient to meet ASHRAE recommendations.

g. The pressure drop created by the traverse probes shall not be greater ten percent of the velocity pressure at the maximum design flow.

h. The probes shall not amplify sound levels in the duct. The manufacturer shall provide submittal data indicating the developed differential pressure and pressure loss at the minimum and maximum design air flows for each duct location.

i. Traverse probes shall be Tek-Air model T-FP5000.

J. Binary temperature devicesID: 318]

1. Line-voltage space thermostat:

a. Line-voltage thermostats shall be bimetal-actuated, snap acting SPDT contact, enclosed, UL listed for electrical rating. The thermostat cover shall provide exposed set point adjustment knob. The thermostat shall operate within the 55°F to 85°F setpoint range, with 2°F maximum differential.

2. Low-temperature safety thermostat:

a. Low-limit air stream thermostats shall be UL listed, vapor pressure type, with a sensing element of 20 ft. minimum length. Element shall respond to the lowest temperature sensed by any 1 ft. section. The low-limit thermostat shall be automatic reset, SPDT type.

3. Aquastat:

a. Strap-on type thermostats shall be provided for low or high temperature limit service on hot water or steam condensate pipes. The thermostats shall be UL listed, with a liquid-filled bulb type sensing element and capillary tubing. The thermostat shall operate

within the 20°F to 120°F, or 100°F to 240°F, setpoint range, with an adjustable 6°F differential.

b. The low-limit thermostat shall be automatic reset, snap acting SPDT type with concealed set point adjustment.

K. Temperature sensors.

1. Provide the following instrumentation as required by the monitoring, control and optimization functions. All temperature sensor shall use platinum RTD elements only, nickel or silicon are not acceptable. All control signals shall be via a 4-20 mA loop.

2. Room Temperature:

a.	Temperature monitoring range	+40/+90 F (+40/120 F for high temp alarms)
b.	Output signal	4-20 mA
c.	Installation adjustments	none required
d.	Calibration adjustments	zero & span
e.	Factory calibration point	70 deg F
f.	Accuracy at calibration point	+0.5 F

3. Liquid Immersion Temperature

a.	Temperature monitoring range	+20/+120 F or +70/+220 F
b.	Output signal	4-20 mA
c.	Installation adjustment	none required
d.	Calibration adjustments	zero & span
e.	Factory calibration point	70 deg F
f.	Accuracy at calibration point	+0.5 F

4. Duct (Single Point) Temperature

a.	Temperature monitoring range	+20/+120 F
b.	Output signal	4-20 mA
c.	Installation adjustments	none required
d.	Calibration adjustments	zero & span
e.	Factory calibration point	70 deg F
f.	Accuracy at calibration point	+0.5 F

5. Duct (Averaging) Temperature

a.	Temperature monitoring range	+20/+120 F
b.	Output signal	4 - 20 mA

c. Installation adjustments none required
d. Calibration adjustments zero & span
e. Factory calibration point 70 deg F
f. Accuracy at calibration point +0.5 F

6. Outside Air Temperature

a. Temperature monitoring range -50/+122
b. Output signal 4-20 mA
c. Installation adjustments none required
d. Calibration adjustments zero & span
e. Factory calibration point 70 deg F
f. Accuracy at calibration point +0.5 F

L. Dew point/humidity sensors

1. Outside Air Dew Point Temperature

a. Dew point monitoring range -40/+115 F DP, 12% to 99% RH
b. Output signal 4-20 mA
c. Calibration adjustments zero & span
d. Factory calibration point 70 F
e. Accuracy at calibration point +2.0 Fdp

2. Room/duct Relative Humidity

a. Sensor Humidity range 0 to 100%
b. Operating temperature 15 F to +170 F
c. Accuracy +2% RH
d. Sensing element Capacitive sensor
e. Output signal 4-20 mA DC
f. Installation adjustments zero & span
g. Operating temperature 15 F to +170 F
h. Voltage requirement 12-36 VDC

M. Pressure sensors

1. Air Static Pressure Sensor

a. Duct Static range -.5 to + 7.5"wg
b. Accuracy + .05" w.g.
c. Output signal 4 - 20 mA

N. Water differential pressure sensor

1. Transducer shall have linear output signal. Zero and span shall be field adjustable.

2. Transducer sensing elements shall withstand continuous operating conditions of positive or negative pressure 50% greater than calibrated span without damage.

3. Water pressure transducer shall have stainless steel diaphragm construction, proof pressure of 150 psi minimum. Transducer shall be complete with 4 to 20 mA output, required mounting brackets, and block and bleed valves.

4. Water differential pressure transducer shall have stainless steel diaphragm construction, proof pressure of 150 psi minimum. Overrange limit (differential pressure) and maximum static pressure shall be 300 psi. Transducer shall be complete with 4 to 20 mA output, required mounting brackets, and three valve manifold.

5. Provide industrial grade differential pressure sensors for all differential pressure bypass valves. Sensor shall be factory calibrated for operating range and rated for system pressure. Provide manufacturers standard 316 stainless steel, 3 valve manifold and pressure gauges for supply and return pressures. Output shall be 4-20 ma. Sensor shall be Rosemount 1151DP, with 316 stainless steel or approved equal.

O. Differential pressure switches

1. Water Differential Pressure Switch

a. Differential pressure type switches (air or water service) shall be UL listed, SPDT snap-acting, pilot duty rated (125 VA minimum), NEMA 1 enclosure, with scale range and differential suitable for intended application or as shown.

b. The differential switches shall meet the following requirements:

1)	Range	8 to 70 psi
2)	Differential	3 psi
3)	Maximum differential pressure	200 psi
4)	Maximum pressure	325 psi

2. Air Differential Pressure Switch

a. Differential pressure switches shall be diaphragm type, with die-cast aluminum housing and adjustable set point. Switch rating

shall be a minimum 5 amps at 120 VAC. Switches shall be SPDT and be used for fan status as specified in the point schedule. Switch pressure range shall be suited for application. (e.g. filter 0-2.0", fan status 0-5.0", etc.)

P. Analog water level sensors

1. Furnish and install full height, analog level sensors for each location as specified. Sensor shall provide 4-20ma signal in proportion to basin water level. Provide waterproof enclosure and mounting hardware as required. Sensor shall be Drexel Brook or equal.

Q. Water leak detection system

1. General:

a. Furnish and install a complete water detection system for each area specified. The system shall include electronic alarm and locating modules, sensing cable, graphic maps and all auxiliary equipment. The system shall simultaneously detect the presence of water at any point along the cables length, sound an alarm and pinpoint the distance to the leak. The sensing cable shall be of such construction that no metallic parts shall be exposed to the environment. The system shall provide preconnectorized sensing cable and components. The system shall be UL listed and FM approved.

b. The system shall be as manufactured by Raychem Corporation or equal.

c. Locating leak detection panel (TTB-FA)

d. The alarm and locator module, TTB-FA, shall monitor up to a maximum of 1000 feet of sensing cable. The alarm module shall indicate that water has contacted the sensing cable by sounding an audible alarm, actuating an output relay, sending a proportional 4-20 mA signal to the BMS and displaying the distance from the start of the sensing cable to the start of the first contact with water. The location of the first water contact shall be retained on the display until the cable is dry and the module is updated.

e. The alarm module shall be capable of detecting the presence of a 1 inch leak any where along the cable with a repeatability of +/- 1%.

f. The alarm module shall continuously monitor the sensing cables and interconnecting cables for continuity. Any break in the cable shall generate an audible alarm, activate an output relay and activate a "continuity" LED on the face of the module.

g. The alarm module shall have LED's indicating "power" (green), "alarm" (red) and "continuity" (yellow). The module shall be equipped with exposed test, reset and silence buttons. All other functions shall require key access.

h. The alarm module shall be powered by Emergency power.

i. The module enclosure shall be a minimum of 16 gauge steel, flush mounting type.

2. Single point leak detector

a. The alarm module, TTC, shall monitor up to a maximum of 50 feet of sensing cable. The alarm module shall indicate that water has contacted the sensing cable by sounding an audible alarm and actuating an output relay. The relay shall be remain activated until the cable is dry and the module is reset.

b. The alarm module shall be capable of detecting the presence of a 1 inch leak any where along the cable with a repeatability of +/- 1%.

c. The alarm module shall continuously monitor the sensing cables and interconnecting cables for continuity. Any break in the cable shall generate an audible alarm, activate an output relay and activate a "continuity" LED on the face of the module.

d. The alarm module shall have LED's indicating "power" (green), "alarm" (red) and "continuity" (yellow).

e. The alarm module shall be powered by Emergency power.

f. The module shall be mounted in an field equipment cabinet.

3. Water sensing cable

a. The water sensing cable (TT-1000) shall detect the presence of water and pinpoint its location. The cable shall consist of four wires: Two sensor wires, a continuity wire and a return wire. All four wires shall be coated and insulated with a fluoropolymer and wound helically around a flouropolymer core. the cable shall have

a breaking strength, including connectors, of at least 70 pounds, per ASTM D-638. The cable shall have an abrasion resistance of >65 cycles, per UL 719.

b. The sensing cable shall offer distributed sensing with the ability to detect the location of water at any point along the length of the cable. The cable shall be flexible, and carry less than 24VDC under normal conditions.

c. The system shall not alarm when in contact with any metallic equipment such as drip pans, floor tile supports, conduit, etc.

d. The cable shall be available in modular, preconnectorized lengths of 5, 10, 15, 25 and 50 feet. Field splicing shall not be acceptable.

e. The cable shall be UL 910 rated and plenum rated per NEC 725-2(b).

f. Provide two sets of test instrumentation to owner.

4. Jumper cable

a. Jumper cable shall be used where leak detection cable is not required but continuity is required (in raceways between alarm module and floor surface, etc.). The jumper cable shall be plenum rated and jacketed with fluoropolymer materials, per NEC 725-2(b). The jumper cable shall consist of four different colors (Y, B, R, G), insulated 18 AWG wires and shall be available in preconnectorized lengths of 5, 10, 15, 25 and 50 feet.

5. Accessories

a. Provide all end connectors, leader cables, hold down clips, caution tags, spray adhesive (3M 90M) as required.

6. Graphic display map

a. Provide a graphic display map for each room served. The map shall be a 1/8 in = 1.0 ft scaled drawing of the area served, indicating actual equipment locations, floor tile and other points of reference. The actual cable routing shall be clearly marked on the map with actual scaled distances every 10 feet.

b. An dynamic graphic display, equivalent to the aforementioned map, shall be duplicated on the BMS operator workstation. The

area in alarm (within 5 feet) shall blink in red until the alarm is cleared.

7. Performance

a. A maximum wetted area of 2 inches of cable, at any point along the entire length of cable, shall activate an alarm.

b. The system shall be continuously monitored for continuity. The loss of continuity shall cause an alarm within 5 seconds.

c. The cable shall be capable of being cleaned with a clean dry cloth, in place.

d. The cable shall dry and reset the module immediately upon removal from free water. No shaking, wiping or mechanical action shall be required.

8. Installation

a. All system components shall be installed in accordance with the manufacturer's recommendations. The manufacturer shall provide necessary installer training and supervision as required.

b. The cable shall be installed on clean, dry finished surfaces only (coordinate access and schedule installation as required) after the possibility of physical damage has been eliminated. The cable shall be fastened to the surface it is monitoring every 4 feet with hold down clips and spray mastic adhesive. Hold down clip installation shall be subject to spot checks during commissioning. If any clip fails, all other clips shall be re-attached and retested, at no additional cost.

c. The system shall be commissioned prior to acceptance. Submit a test procedure for approval.

9. Warranty

a. All equipment shall be warranted to the same extent as the BMS system, or per the manufacturer's warranty, whichever is greater.

R. Water btu meters

1. Provide insertion type water flow meters designed to mount through a fully open 1 inch full bore ball valve supplied by flow meter manufacturer.

Meter flow range shall be 2-40 feet/second for liquid service. Meter linearity shall be +/-1% for a 10:1 range. Repeatability shall be .10%. All wetted parts shall be constructed of stainless steel, bearings shall be tungsten carbide. Housing and flange shall be carbon steel. Housing pressure rating shall be 350 psig. A D.C. powered transmitter shall be mounted on the flow meter. Flow transmitter output shall be 4-20 mA linear with flow. Transmitter input shall be from magnetic pickup. Transmitter accuracy shall be .25% of span. The water flow meter shall be Onicon F 1220 or equal.

2. Provide supply and return temperature sensors for "Delta-T" calculation of BTU consumption. Monitor total accumulated BTUs, current BTUs, monthly total BTUs, and yearly total BTUs for each location specified or shown.

3. Provide isolation valve kit to allow removal and servicing of meter while system is operating.

4. All devices associated with the BTU meters serving the chilled water and ice storage system shall be suitable for the extreme environmental conditions. The devices shall properly operate with the specified accuracy and shall not be affected by the media, or by the environment that includes but not limited to low temperatures (10 Deg F), temperature fluctuations and condensation. Control panel enclosures and electronics shall meet the aforementioned requirements or located strategically to ensure proper operation.

S. Vortex shedding flow meters

1. Provide vortex shedding flow meter for steam metering locations. Meter shall be pressure and temperature compensated, rated for service conditions and be manufactured by Endress and Hauser model FTV 1810 or approved equal. Provide remote readout of pressure, flow, MLb/Hr and total MLb.

2. Coordinate location to provide proper straight run of pipe, pipe size, etc.

3. Power 24VDC power supply as required from Emergency source.

4. BMS system shall monitor Mlb/Hr, Mlb total, pressure and temperature values.

T. Indoor air quality (Co2/vVOC) sensors

1. Provide indoor air quality sensors to monitor Carbon Dioxide (CO2) and Volatile Organic Compound (VOC) levels.

2. The sensors shall be of microprocessor-based photoacoustic type with heated stannic dioxide semiconductor.

3. The CO2 sensors shall have no more than 1% drift during the first year of operation and minimal drift thereafter so that no calibration will be required.

4. The units shall be wall or duct mounted type as indicated on plans and in the sequence of operation.

5. Wall mounted sensors shall be provided with white plastic cover, without LED indicators.

6. Duct mounted sensors shall be provided with LED indicators in a dust proof plastic housing with transparent cover.

7. The VOC sensor shall have automatic self calibrating capability to ensure accuracy.

8. The sensor shall meet the following requirements:

a.	Operating voltage:	24 VAC +/- 20%
b.	Frequency:	50/60 Hz
c.	Power consumption:	max. 6 VA
d.	CO2 measuring range:	0 – 2000 ppm
e.	Tolerance:	+/- 100 ppm
f.	Output:	0 – 10 VAC
g.	Calibration:	none required
h.	VOC measurement range:	0 – 10 V VOC
i.	Permissible air velocity in duct:	<26.2 Ft/s.

9. The sensors shall be model:

   a. Siemens QPA63 Series.
   b. MSA AirOX

U. Relays

1. Control relays shall be UL listed plug-in type with dust cover and LED "energized" indicator. Contact rating, configuration, and coil voltage shall be suitable for application.

2. Time delay relays shall be UL listed solid-state plug-in type with adjustable time delay. Delay shall be adjustable ±200% (minimum) from set point shown on plans. Contact rating, configuration, and coil voltage shall be suitable for application. Provide NEMA 1 enclosure when not installed in local control panel.

V. Override timers

1. Override timers shall be spring-wound line voltage, UL Listed, with contact rating and configuration as required by application. Provide 0-to-6-hour calibrated dial unless otherwise specified. Timer shall be suitable for flush mounting on control panel face and located on local control panels or where shown.

2. Current transmitters.

3. AC current transmitters shall be the self-powered, combination split-core current transformer type with built-in rectifier and high-gain servo amplifier with 4 to 20 mA two-wire output. Unit ranges shall be 10 A, 20 A, 50 A, 100 A, 150 A, and 200 A full scale, with internal zero and span adjustment and ±1% full-scale accuracy at 500 ohm maximum burden.

4. Transmitter shall meet or exceed ANSI/ISA S50.1 requirements and shall be UL/CSA Recognized.

5. Unit shall be split-core type for clamp-on installation on existing wiring.

W. Current transformers

1. AC current transformers shall be UL/CSA Recognized and completely encased (except for terminals) in approved plastic material.

2. Transformers shall be available in various current ratios and shall be selected for ±1% accuracy at 5 A full-scale output.

3. Transformers shall be fixed-core or split-core type for installation on new or existing wiring, respectively.

X. Voltage transmitters

1. AC voltage transmitters shall be self-powered single-loop (two-wire) type, 4 to 20 mA output with zero and span adjustment.

2. 2 Ranges shall include 100 to 130 VAC, 200 to 250 VAC, 250 to 330 VAC, and 400 to 600 VAC full-scale, adjustable, with ±1% full-scale accuracy with 500 ohm maximum burden.

3. Transmitters shall be UL/CSA Recognized at 600 VAC rating and meet or exceed ANSI/ISA S50.1 requirements.

Y. Voltage transformers

1. AC voltage transformers shall be UL/CSA Recognized, 600 VAC rated, complete with built-in fuse protection.

2. Transformers shall be suitable for ambient temperatures of 4°C to 55°C (40°F to 130°F) and shall provide ±0.5% accuracy at 24 VAC and a 5 VA load.

3. Windings (except for terminals) shall be completely enclosed with metal or plastic material.

Z. Power monitors

1. Power monitors shall be the three-phase type furnished with three-phase disconnect/shorting switch assembly, UL Listed voltage transformers, and UL Listed split-core current transformers.

2. They shall provide a selectable rate pulse output for kWh reading and a 4 to 20 mA output for kW reading. They shall operate with 5 A current inputs with a maximum error of ±2% at 1.0 power factor or ±2.5% at 0.5 power factor.

AA. Current switches

1. Current-operated switches shall be self-powered, solid-state with adjustable trip current. The switches shall be selected to match the current of the application and output requirements of the DDC system.

BB. Pressure-electric (pe) switches

1. Shall be metal or neoprene diaphragm actuated, operating pressure rated 0-175 kPa (0-25 psig), with calibrated scale set point range of 14-125 kPa (2-18 psig) minimum, UL listed.

2. Provide one or two-stage switch action SPDT, DPST, or DPDT, as required by application. Electrically rated for pilot duty service (125 VA minimum) and/or for motor control.

3. Shall be open type (panel-mounted) or enclosed type for remote installation. Enclosed type shall be NEMA 1 unless otherwise specified.

4. Shall have a permanent indicating gauge on each pneumatic signal line to PE switches.

CC. Electro-pneumatic (e/p) transducers

1. Electronic/pneumatic transducer shall provide a proportional 20 to 100 kPa (3 to 15 psig) output signal from either a 4 to 20 mA or 0 to 10 VDC analog control input.

2. E/P transducer shall be equipped with the following features:

3. Separate span and zero adjustments

4. Manual output adjustments

5. Pressure gauge assembly d. Feedback loop control

6. Air consumption of 0.05 L/s (0.1 scfm) at mid-range

DD. Local control panels

1. All indoor control cabinets shall be fully enclosed NEMA 1 construction with (hinged door) key-lock latch and removable sub panels. A single key shall be common to all field panels and sub panels.

2. Interconnections between internal and face mounted devices shall be prewired with color-coded stranded conductors neatly installed in plastic troughs and/or tie-wrapped. Terminals for field connections shall be UL listed for 600 volt service, individually identified per control/ interlock drawings, with adequate clearance for field wiring. Control terminations for field connection shall be individually identified per control drawings.

3. Provide ON/OFF power switch with overcurrent protection for control power sources to each local panel.

EE. Local user display

1. Where specified in the sequence of operation or points list, the controllers on the peer to peer building level network shall have a display and keypad for local interface. A keypad shall be provided for interrogating and commanding points in the controller.

2. The display shall use the same security password and access rights for points in the display as is used in the associated controller.

3. The LCD display shall be a minimum of a 2 line 40 character display.

4. The LCD display shall include the full point name, value (numeric, digital or state text), point priority and alarm status on one screen.

5. The LCD shall dynamically update the value, priority, and alarm status for the point being displayed.

6. The display shall be mounted either on the door of the enclosure or remote from the controller.

2.10 Communication and Control Wiring

A. General:

1. Provide copper wiring, plenum cable, and raceways as specified in the applicable sections of Division 16 unless otherwise noted herein.

2. All insulated wire to be copper conductors, UL labeled for 90°C minimum service.

B. Wire Sizing and Insulation

1. Wiring shall comply with minimum wire size and insulation based on services listed below:

	Service	Minimum Gage/Type	Insulation Class
a.			
b.	AC 24V Power	12 Ga Solid	600 Volt
c.	DC 24V Power	10 Ga Solid	600 Volt
d.	Class 1	14 Ga Stranded	600 Volt
e.	Class 2	18 Ga Stranded	300 Volt
f.	Class 3	18 Ga Stranded	300 Volt

2. Provide plenum-rated cable when open cable is permitted in supply or return air plenum where allowed per execution specifications defined in Paragraph 3.07

C. Power Wiring:

1. 115V power circuit wiring above 100 feet distance shall use minimum 10 gage.

2. 24V control power wiring above 200 feet distance shall use minimum 12 gage.

D. Control Wiring:

1. Digital Input/Output wiring shall use Class 2 twisted pair, insulated.

2. Analog inputs shall use Class 2 twisted shielded pair, insulated and jacketed and require a grounded shield.

3. Actuators with tri-state control shall use 3 conductor with same characteristics

E. Communication Wiring

1. Ethernet Cable shall be minimum CAT5

2. Secondary level network shall be 24 gage, TSP, low capacitance cable

F. Approved Cable Manufacturers:

1. Wiring from the following manufacturers which meet the above criteria shall be acceptable:

a. Anixter
b. Belden

2.11 Fiber Optic Cable System

A. Fiber Optic cable: Optical cables shall be duplex 900 mm tight-buffer construction designed for intra-building environments. The sheath shall be UL Listed OFNP in accordance with NEC Article 770. The optical fiber shall meet the requirements of FDDI, ANSI X3T9.5 PMD for 62.5/125mm for us in 10/100 MB fiber optic networks.

B. Connectors: All optical fibers shall be field-terminated with ST type connectors. Connectors shall have hot melt and polish or epoxy and polish type connectors. No Mechanical crimp type permitted.

C. Outdoor/underground installation of Fiber Optic cable shall be gel coated and rated for outdoor/underground installation

D. Four strands is the minimum required for each run, two for the link and two as spares.

E. 1 GB Ethernet networks shall be single mode fiber for lengths over 275m. Single mode Ethernet requires two strands of 9 um cable

2.12 Compressed Air Supply

A. General:

1. Provide a compressed air supply system including duplex type air compressor set, air tanks and pneumatic air distribution system including tubing and pressure reducing stations.

B. Air Compressor:

1. Provide a duplex type air compressor set complete with motors, V-belt drives, OSHA belt guards, pressure switches, ASME safety relief valve, pressure gauge, intake filter silencers, starters, electric alternator, and all other items and accessories.

2. The two compressors shall be mounted on ASME National Board receiving tank. The entire unit shall be factory piped and wired.

3. Each compressor shall be single stage, one or two cylinders, air cooled, with drop forged steel crankshaft supported on both ends by means of ball, roller or sleeve main bearings. Lubrication shall be of the constant level splash type, or of the pressure type, to assure adequate supply of oil to all working parts. Compressor shall be provided with oil proof piston rings.

4. The compressor shall meet the following minimum requirements:

a.	Working pressure:	70-90 PSI
b.	System air pressure:	80 PSI
c.	Maximum oil carryover:	4 ppm
d.	Maximum run time:	33%
e.	Maximum Starts per hour:	six (6)
f.	Motor speed:	450 RPM
g.	Motor voltage:	230 VAC/3 Phase

5. Compressor shall be sized as necessary to supply all pneumatics associated with the building automation system as well as the main air for all other HVAC equipment and devices as required.

6. The compressor assembly shall be mounted on vibration isolation pads.

C. Motor Starter / Alternator

1. Each compressor motor shall be provided with a magnetic starter with dedicated local disconnect and three overload relays.

2. Provide factory-installed duplex starter/automatic alternator package with separate motor feeds, arranged for automatic start of standby compressor.

D. Air Tank

1. Provide ASME receiver tank, sized according to runtime and start per hour requirements.

2. The air tank shall be painted with a prime and finish coat of paint in accordance with the manufacturers standard practice.

3. Air tank shall be provided with a drain opening at the bottom, which shall be piped near the floor drain.

4. Provide electric solenoid type (normally closed) automatic receiver tank drain valve with built-in timers for operating frequency and duration.

E. Refrigerated Air Dryer:

1. Provide continuously operating, hermetic compressor refrigerated type air dryer, UL Listed, sized for maximum dew point of -9.5°C (15°F) with 38°C (100°F) saturated inlet air at 550 kPa (80 psig) at maximum rated flow.

2. Dryer package shall include operating/failure status indication, manual bypass service valve, inlet and outlet pressure gauges, and automatic condensate drain trap with manual override.

F. Regenerative Desiccant Compressed Air Dryer:

1. Unit shall be wall-mounted, complete with two drying towers containing desiccant beds sized to ensure that air velocity across the desiccant bed is not greater than 0.3 m/s (60 fpm) at 700 kPa (100 psig). Bed shall be sized so that the effects of desiccant aging during the first year are negated. Each tower shall be furnished with fill and drain ports to facilitate desiccant replacement.

2. Unit shall be complete with On/Off switch, solid-state timer, control valves, and check valves. Purge air shall be exhausted through mufflers to reduce noise levels.

3. Unit shall have a 3 psi maximum pressure drop and provide dry air with a -40°C (-40°F) dew point.

4. Unit shall be sized to match required air consumption, 2.5 L/s (5 cfm) minimum.

G. Filter and PRV Station:

1. Provide aerosol coalescing type auto-drain, submicron air filter assembly with replaceable element, 98% efficient for solids 0.3 micron and larger, with 99% efficient oil removal at rated capacity. Furnish with manual filter bypass and shutoff valves, upstream and downstream pressure gauges, and one spare filter element.

2. Provide relieving type pressure-reducing valves suitable for temperature control service sized for rated system capacity, with the following:

a. ASME-rated safety relief valve on low-pressure side, factory set at 25 psig maximum

b. Control pressure gauge on inlet and outlet

c. Valved bypass

d. Particle filter

H. Tubing.

1. Copper. Provide ACR hard-drawn seamless copper tubing.

2. Polyethylene. Provide type FR plenum rated polyethylene tubing. Tubing shall be rated for a maximum operating pressure of 200 kPa (30 psi) at 80°C (175°F), with an ambient operating temperature range of -13°C (-10°F) to 65°C (150°F). Plastic tubing shall have the burning characteristics of linear low-density polyethylene tubing, shall be self-extinguishing when tested in accordance with ASTM D 635, shall have UL 94 V-2 flammability classification and shall withstand stress cracking when tested in accordance with ASTM D 1693. Plastic-tubing bundles shall be provided with mylar barrier and flame-retardant polyethylene jacket.

2.12 General

A. Only those products of particular importance to appearance or function are described in this Products section. Other items required for satisfactory systems operation but not herein described shall be furnished and installed to meet the intent and Operating Sequences herein described.

2.13 AUTOMATIC SHUTDOWN OF RECIRCULATING AIR SYSTEMS

B. All fans supplying more than 2,000 cfm of air to any space shall be installed with a smoke detector in the supply ductwork. Duct smoke detectors shall be installed in the return air path of air distribution systems utilizing a common supply and/or return air plenum with a combined design capacity greater than 2,000 cfm.

C. The smoke detector shall be wired to stop the fan upon detection of smoke, and signal the building fire alarm control panel. The smoke detector shall be furnished by the Electrical Contractor, mounted in the duct by the HVAC Contractor, and wired by the Electrical Contractor.

2.14 HVAC EMERGENCY SHUTDOWN

D. Manual over-ride control (emergency shut-down) switch for all HVAC units shall be located in a locking cover adjacent to the fire alarm annunciator panel or other location approved by the authority having jurisdiction.

E. Provide motor starter(s) with auxiliary contactor to accomplish Item A above.

2.15 BOILER EMERGENCY AND SAFETY SHUTDOWN

F. All boilers shall have a manually operated remote shutdown switch (STI “Stopper” Model SS-2301) located just outside the boiler room door. (If the door opens to the exterior, mount the switch inside the door adjacent to the light switch). If there is more than one door, provide a switch at each door. The switch shall be clearly marked “Boiler Emergency Shut Down” in 1/2" high white letters engraved on a plastic laminate tag with a red background. The emergency shutdown switch shall disconnect all power to the burner controls.

G. The boiler shall have a factory or field installed lockable disconnect switch.

PART 3 – EXECUTION

3.01 Examination:

A. The project plans shall be thoroughly examined for control device and equipment locations. Any discrepancies, conflicts, or omissions shall be reported to the architect/engineer for resolution before rough-in work is started.

B. The contractor shall inspect the site to verify that equipment may be installed as shown. Any discrepancies, conflicts, or omissions shall be reported to the engineer for resolution before rough-in work is started.

C. The contractor shall examine the drawings and specifications for other parts of the work. If head room or space conditions appear inadequate—or if any discrepancies occur between the plans and the contractor's work and the plans and the work of others—the contractor shall report these discrepancies to the engineer and shall obtain written instructions for any changes necessary to accommodate the contractor's work with the work of others.

3.02 Protection

A. The contractor shall protect all work and material from damage by its employees and/or subcontractors and shall be liable for all damage thus caused.

B. The contractor shall be responsible for its work and equipment until finally inspected, tested, and accepted.

3.03 Coordination

A. Site

1. The project coordination between trades is the responsibility of the prime contractor who is the one tier higher contractual partner such as mechanical contractor, general contractor, construction manager, owner or owner's representative as applicable.

2. The controls contractor shall follow prime contractor's job schedule and coordinate all project related activities through the prime contactor except otherwise agreed or in minor job site issues. Reasonable judgment shall be applied.

3. Where the work will be installed in close proximity to, or will interfere with, work of other trades, the contractor shall assist in working out space conditions to make a satisfactory adjustment.

4. If the contractor deviates form the job schedule and installs work without coordinating with other trades, so as to cause interference with work of other trades, the contractor shall make the necessary changes to correct the condition without extra charge.

5. Coordinate and schedule work with all other work in the same area, or with work that is dependent upon other work, to facilitate mutual progress.

B. Submittals.

1. Refer to the "Submittals" article in Part 1 of this specification for requirements.

C. Test and Balance

1. The contractor shall furnish a single set of all tools necessary to interface to the control system for test and balance purposes.

2. The contractor shall provide training in the use of these tools. This training will be planned for a minimum of 4 hours. [ID: 136

3. In addition, the contractor shall provide a qualified technician for duration of 8 hours to assist in the test and balance process.

4. The tools used during the test and balance process shall be returned at the completion of the testing and balancing.

D. Life Safety

1. Duct smoke detectors required for air handler shutdown are supplied under Division 16 of this specification. The contractor shall interlock smoke detectors to air handlers for shutdown as described in Part 3, "Sequences of Operation."

2. Smoke dampers and actuators required for duct smoke isolation are provided under a Section of Division 15. The contractor shall interlock these dampers to the air handlers as described in Part 3, "Sequences of Operation."

3. Fire/smoke dampers and actuators required for fire rated walls are provided under another Section of Division 15. Control of these dampers shall be by Division 16.

E. Coordination with controls specified in other sections or divisions.

1. Other sections and/or divisions of this specification include controls and control devices that are to be part of or interfaced to the control system specified in this section. These controls shall be integrated into the system and coordinated by the contractor as follows:

    a. All communication media and equipment shall be provided as specified in Part 2, "Communication" of this specification.

    b. Each supplier of controls product is responsible for the configuration, programming, startup, and testing of that product to meet the sequences of operation described in this section.

    c. The Contractor shall coordinate and resolve any incompatibility issues that arise between the control products provided under this section and those provided under other sections or divisions of this specification.

    d. The contractor is responsible for providing all controls described in the contract documents regardless of where within the contract documents these controls are described.

    e. The contractor is responsible for the interface of control products provided by multiple suppliers regardless of where this interface is described within the contract documents.

3.04 General Workmanship

A. Install equipment, piping, and wiring/raceway parallel to building lines (i.e., horizontal, vertical, and parallel to walls) wherever possible.

B. Provide sufficient slack and flexible connections to allow for vibration of piping and equipment.

C. Install all equipment in readily accessible locations as defined by Chapter 1, Article 100, Part A of the National Electrical Code (NEC).

D. Verify integrity of all wiring to ensure continuity and freedom from shorts and grounds.

E. All equipment, installation, and wiring shall comply with acceptable industry specifications and standards for performance, reliability, and compatibility and be executed in strict adherence to local codes and standard practices.

3.05 Field Quality Control

A. Contractor shall have a 6 Sigma certified quality manager on staff to inspect the project execution and to enforce quality standards.

B. All work, materials, and equipment shall comply with the rules and regulations of applicable local, state, and federal codes and ordinances as identified in Part 1 of this specification.

C. Contractor shall continually monitor the field installation for code compliance and quality of workmanship.

D. Contractor shall have work inspected by local and/or state authorities having jurisdiction over the work.

3.06 Existing Equipment

A. Wiring: The contractor may reuse any abandoned wires. The integrity of the wire and its proper application to the installation are the responsibility of the contractor. The wire shall be properly identified and tested in accordance with this specification. Unused or redundant wiring must be properly identified as such. Interconnecting control wiring shall be removed and become the property of the contractor, unless specifically noted or shown to be reused.

B. Pneumatic Tubing: The contractor may reuse any redundant pneumatic tubing. The integrity of the tubing and its proper application to the installation are the responsibility of the contractor. The tubing shall be properly identified and tested in accordance with this specification. Unused or redundant tubing must be removed or, where this is not possible, properly identified. Interconnecting pneumatic control tubing shall be removed and become the property of the contractor, unless specifically noted or shown to be reused.

C. Unless otherwise directed, the contractor is not responsible for the repairs or replacement of existing energy equipment and systems, valves, dampers, or actuators. Should the contractor find existing equipment that requires maintenance, the engineer is to be notified immediately.

3.07 Wiring

A. All control and interlock wiring shall comply with national and local electrical codes and Division 16 of this specification. Where the requirements of this section differ from those in Division 16, the requirements of this section shall take precedence.

B. All NEC Class 1 (line voltage) wiring shall be UL Listed in approved conduit according to NEC and Division 16 requirements.

C. All low-voltage wiring shall meet NEC Class 2 requirements. (Low-voltage power circuits shall be sub fused when required to meet Class 2 current limit.)

D. Where NEC Class 2 (current-limited) wires are in concealed and accessible locations, including ceiling return air plenums, approved cables not in conduit may be used provided that cables are UL Listed for the intended application. For example, cables used in ceiling plenums shall be UL Listed specifically for that purpose.

E. All wiring in mechanical, electrical, or service rooms—or where subject to mechanical damage— shall be installed in conduit.

F. Do not install Class 2 wiring in conduit containing Class 1 wiring. Boxes and panels containing high voltage wiring and equipment may not be used for low-voltage wiring except for the purpose of interfacing the two (e.g., relays and transformers).

G. Do not install wiring in conduit containing tubing.

H. Where plenum rated cable is run exposed, wiring is to be run parallel along a surface or perpendicular to it and neatly tied at 3 m (10 ft) intervals.

I. Where plenum rated cable is used without conduit, it shall be supported from or anchored to structural members. Cables shall not be supported by or anchored to ductwork, electrical conduits, piping, or ceiling suspension systems.

J. All wire-to-device connections shall be made at a terminal block or wire nut. All wire-to-wire connections shall be at a terminal strip or wire nut.

K. All wiring within enclosures shall be neatly bundled and anchored to permit access and prevent restriction to devices and terminals.

L. Maximum allowable voltage for control wiring shall be 120 V. If only higher voltages are available, the contractor shall provide step-down transformers or interposing relays.

M. All plenum rated wiring shall be installed as continuous lengths, with no splices permitted between termination points

N. All wiring in conduit shall be installed as continuous lengths, with no splices permitted between termination points or junction boxes.

O. Maintain fire rating at all penetrations. Install plenum wiring in sleeves where it passes through walls and floors.

P. Size and type of conduit and size and type of wire shall be the responsibility of the contractor, in keeping with the manufacturer's recommendations and NEC requirements, except as noted elsewhere.

Q. Include one pull string in each conduit 3/4 in. or larger.

R. Control and status relays are to be located in designated enclosures only. These enclosures can include packaged equipment control panel enclosures unless they also contain Class 1 starters.

S. Conceal all conduit, except within mechanical, electrical, or service rooms. Install conduit to maintain a minimum clearance of 15 cm (6 in.) from high-temperature equipment (e.g., steam pipes or flues).

T. Secure conduit with conduit clamps fastened to the structure and spaced according to code requirements. Conduit and pull boxes may not be hung on flexible duct strap or tie rods. Conduits may not be run on or attached to ductwork.

U. Adhere to this specification's Division 16 requirements where conduit crosses building expansion joints.

V. The Contractor shall terminate all control and/or interlock wiring and shall maintain updated (as-built) wiring diagrams with terminations identified at the job site.

W. Flexible metal conduits and liquid-tight, flexible metal conduits shall not exceed 1 m (3 ft) in length and shall be supported at each end. Flexible metal conduit less than ½ in. electrical trade size shall not be used. In areas exposed to moisture, including chiller and boiler rooms, liquid-tight, flexible metal conduits shall be used.

X. Conduit must be adequately supported, properly reamed at both ends, and left clean and free of obstructions. Conduit sections shall be joined with couplings (according to code). Terminations must be made with fittings at boxes, and ends not terminating in boxes shall have bushings installed.

3.08 Communication Wiring

A. The contractor shall adhere to the items listed in the "Wiring" article in Part 3 of the specification.

B. All cabling shall be installed in a neat and workmanlike manner. Follow manufacturer's installation recommendations for all communication cabling.

C. Do not install communication wiring in raceway and enclosures containing Class 1 or other Class 2 wiring.

D. Maximum pulling, tension, and bend radius for cable installation, as specified by the cable manufacturer, shall not be exceeded during installation.

E. Contractor shall verify the integrity of the entire network following the cable installation. Use appropriate test measures for each particular cable.

F. When a cable enters or exits a building, a lightning arrestor must be installed between the lines and ground. The lighting arrestor shall be installed according to the manufacturer's instructions.

G. All runs of communication wiring shall be unspliced length when that length is commercially available.

H. All communication wiring shall be labeled to indicate origination and destination data.

I. Grounding of coaxial cable shall be in accordance with NEC regulations article on "Communications Circuits, Cable, and Protector Grounding."

3.09 Fiber Optic Cable System

A. Maximum pulling tensions as specified by the cable manufacturer shall not be exceeded during installation. Post-installation residual cable tension shall be within cable manufacturer's specifications.

B. All cabling and associated components shall be installed in accordance with manufacturers' instructions. Minimum cable and unjacketed fiber bend radii, as specified by cable manufacturer, shall be maintained.

C. All terminations need to be made into a patch panel, designed for such use. Free air terminations with patch panels are prohibited.

3.10 Installation Of Sensors

A. General:

1. Install sensors in accordance with the manufacturer's recommendations.

2. Mount sensors rigidly and adequately for the environment within which the sensor operates.

3. Room temperature sensors shall be installed on concealed junction boxes properly supported by the wall framing.

4. All wires attached to sensors shall be air sealed in their raceways or in the wall to stop air transmitted from other areas affecting sensor readings.

5. Sensors used in mixing plenums and hot and cold decks shall be of the averaging type.

6. Low-limit sensors used in mixing plenums shall be installed in a serpentine manner horizontally across the full face of the coil.

7. All pipe-mounted temperature sensors shall be installed in wells. Install all liquid temperature sensors with heat-conducting fluid in thermal wells.

8. Install outdoor air temperature sensors on north wall, complete with sun shield at designated location.

B. Room Instrument Mounting

1. Room instruments, including but not limited to wall mounted thermostats and sensors located in occupied spaces shall be mounted 53 inches above the finished floor unless otherwise shown.

C. Instrumentation Installed in Piping Systems

1. Thermometers and temperature sensing elements installed in liquid systems shall be installed in thermowells.

2. Gauges in piping systems subject to pulsation shall have snubbers.

3. Gauges for steam service shall have pigtail fittings with isolation valve.

D. Duct Smoke Detectors

1. Duct smoke detectors will be provided by the Fire Alarm System Contractor in supply and return air ducts in accordance with Division 16

2. Contractor shall connect the DDC System to the auxiliary contacts provided on the Smoke Detector as required for system safeties and to provide alarms to the DDC system.

E. Occupancy Sensors

1. A sufficient quantity of occupancy sensors shall be provided to provide complete coverage of the area (room or space).

2. Occupancy sensors shall be installed in accordance with NFPA 70 requirements and the manufacturer's instructions.

3. Occupancy sensors shall not be located within 1.8 m (6 feet) of HVAC outlets or heating ducts.

4. PIR and dual-technology PIR/ultrasonic sensors shall not be installed where they can "see" beyond any doorway.

5. Ultrasonic sensors shall not be installed in spaces containing ceiling fans.

6. Sensors shall detect motion to within 0.6 m (2 feet) of all room entrances and shall not trigger due to motion outside the room.

7. The off-delay timer shall be set to [15][___] minutes unless otherwise shown.

8. All sensor adjustments shall be made prior to beneficial occupancy, but after installation of furniture systems, shelving, partitions, etc.

9. Each controlled area shall have one hundred percent coverage capable of detecting small hand-motion movements, accommodating all occupancy habits of single or multiple occupants at any location within the controlled room.

F. Temperature Limit Switch

1. A temperature limit switch (Low Temperature Detector) shall be provided to sense the temperature.

2. A sufficient number of temperature limit switches shall be installed to provide complete coverage of the duct section.

3. Manual reset limit switches shall be installed in approved, accessible locations where they can be reset easily.

4. The temperature limit switch sensing element shall be installed in a serpentine pattern and in accordance with the manufacturer's installation instructions.

5. Each bend shall be supported with a capillary clip. Provide 3 m of sensing element for each 1 m^2 (1 ft of sensing element for each 1 ft^2) of coil area.

G. Averaging Temperature Sensing Elements

1. Sensing elements shall be installed in a serpentine pattern.

2. Averaging sensors shall be installed in a serpentine manner vertically across the duct. Each bend shall be supported with a capillary clip.

H. Air Flow Measuring Stations (AFMS)

1. Outside Air AFMSs shall be located downstream from the Outside Air filters.

2. Pitot Tube type AFMS shall not be used if the expected velocity measurement is below 3.5 m/s (700 fpm) [or for outside airflow measurements].

I. Differential air static pressure.

1. Supply Duct Static Pressure: Pipe the high-pressure tap to the duct using a pitot tube. Pipe the low-pressure port to a tee in the high-pressure tap tubing of the corresponding building static pressure sensor (if applicable) or to the location of the duct high-pressure tap and leave open to the plenum.

2. Return Duct Static Pressure: Pipe the high-pressure tap to the duct using a pitot tube. Pipe the low-pressure port to a tee in the low-pressure tap tubing of the corresponding building static pressure sensor.

3. Building Static Pressure: Pipe the low-pressure port of the pressure sensor to the static pressure port located on the outside of the building through a high-volume accumulator. Pipe the high-pressure port to a location behind a thermostat cover.

4. The piping to the pressure ports on all pressure transducers shall contain a capped test port located adjacent to the transducer.

5. All pressure transducers, other than those controlling VAV boxes, shall be located in field device panels, not on the equipment monitored or on ductwork.

6. Mount transducers in a location accessible for service without use of ladders or special equipment.

J. Water Differential pressure sensors

1. Differential pressure sensors shall be installed with valved taps into the piping to ensure serviceability without draining the system

2. Sensors shall be mounted with bleed valves

3. After sensor installation any air shall be eliminated using the bleed valves to ensure reading accuracy

4. The sensors shall be located to ensure accessibility

K. Relative Humidity Sensors

1. Relative humidity sensors in supply air ducts shall be installed at least 3m (10 feet) downstream of humidity injection elements.

L. Flowmeters

1. The minimum straight unobstructed piping for the flowmeter installation shall be at least 10 pipe diameters upstream and at least 5 pipe diameters downstream and/or in accordance with the manufacturer's installation instructions.

M. Flow Switch

1. Use correct paddle for pipe diameter.

2. Adjust flow switch in accordance with manufacturer’s instructions.

3.11 Flow Switch Installation

A. Use correct paddle for pipe diameter.

B. Adjust flow switch in accordance with manufacturer’s instructions.

3.12 Actuators

A. Mount and link control damper actuators according to manufacturer’s instructions.

1. To compress seals when spring-return actuators are used on normally closed dampers, power actuator to approximately 5° open position, manually close the damper, and then tighten the linkage.

2. Check operation of damper/actuator combination to confirm that actuator modulates damper smoothly throughout stroke to both open and closed positions.

3. Provide all mounting hardware and linkages for actuator installation.

B. Electric/Electronic

1. Dampers: Actuators shall be direct-mounted on damper shaft or jackshaft unless shown as a linkage installation. For low-leakage dampers with seals, the actuator shall be mounted with a minimum 5° available for tightening the damper seals. Actuators shall be mounted following manufacturer's recommendations.

2. Valves: Actuators shall be connected to valves with adapters approved by the actuator manufacturer. Actuators and adapters shall be mounted following the actuator manufacturer's recommendations.

C. Pneumatic Actuators

1. Size pneumatic damper actuator to operate the related control damper(s) with sufficient reserve power to provide smooth modulating action or two-position action. Actuator also shall be sized for proper speed of response at the velocity and pressure conditions to which the control damper is subject.

3.13 Warning labels and identification tags

A. Permanent warning labels shall be affixed to all equipment that can be automatically started by the DDC system.

1. Labels shall use white lettering (12-point type or larger) on a red background.

2. Warning labels shall read as follows: "C A U T I O N This equipment is operating under automatic control and may start or stop at any time without warning. Switch disconnect to "Off" position before servicing."

B. Permanent warning labels shall be affixed to all motor starters and all control panels that are connected to multiple power sources utilizing separate disconnects.

1. Labels shall use white lettering (12-point type or larger) on a red background.

2. Warning labels shall read as follows: "C A U T I O N This equipment is fed from more than one power source with separate disconnects. Disconnect all power sources before servicing."

C. Equipment and Device labeling:

1. Labels and tags shall be keyed to the unique identifiers shown on the As-Built drawings.

2. All Enclosures and DDC Hardware shall be labeled.

3. All sensors and actuators not in occupied areas shall be tagged.

4. Airflow measurement arrays shall be tagged to show flow rate range for signal output range, duct size, and pitot tube AFMS flow coefficient.

5. Duct static pressure taps shall be tagged at the location of the pressure tap.

6. Tags shall be plastic or metal and shall be mechanically attached directly to each device or attached by a metal chain or wire.

7. Labels exterior to protective enclosures shall be engraved plastic and mechanically attached to the enclosure or DDC Hardware.

8. Labels inside protective enclosures may be attached using adhesive, but shall not be hand written.

9. Identify all other control components with permanent labels. All plug-in components shall be labeled such that removal of the component does not remove the label.

10. Identify room sensors relating to terminal box or valves with nameplates.

11. Manufacturers' nameplates and UL or CSA labels are to be visible and legible after equipment is installed.

D. Identification of Tubing and Wiring

1. All wiring and cabling including that within factory-fabricated panels shall be labeled at each end within 5 cm (2 in.) of termination with the DDC address or termination number.

2. Permanently label or code each point of field terminal strips to show the instrument or item served.

3. All pneumatic tubing shall be labeled at each end within 5 cm (2 in.) of termination with a descriptive identifier.

3.14 Identification Of Hardware And Wiring

A. All wiring and cabling, including that within factory-fabricated panels shall be labeled at each end within 5 cm (2 in.) of termination with the DDC address or termination number.

B. All pneumatic tubing shall be labeled at each end within 5 cm (2 in.) of termination with a descriptive identifier.

C. Permanently label or code each point of field terminal strips to show the instrument or item served.

D. Identify control panels with minimum 1 cm (½ in.) letters on laminated plastic nameplates.

E. Identify all other control components with permanent labels. All plug-in components shall be labeled such that removal of the component does not remove the label.

F. Identify room sensors relating to terminal box or valves with nameplates.

G. Manufacturers' nameplates and UL or CSA labels are to be visible and legible after equipment is installed.

H. Identifiers shall match record documents.

3.15 Programming

A. Provide sufficient internal memory for the specified sequences of operation and trend logging. There shall be a minimum of 25% of available memory free within the primary controller for future use.

B. Point Naming: System point names shall be modular in design, allowing easy operator interface without the use of a written point index. Point Naming standard shall be agreed upon between owner and BAS contractor. Refer to Submittals section in the General Section.

C. Software Programming

1. Provide programming for the system and adhere to the sequences of operation provided. The contractor also shall provide all other system programming necessary for the operation of the system, but not specified in this document. Imbed into the control program sufficient comment statements to clearly describe each section of the program. The comment statements shall reflect the language used in the sequences of operation and be of different font and color in text editor. Use the appropriate technique based on one of the following programming types:

   a. Text-based:

      1) Must provide actions for all possible situations
      2) Must be modular and structured
      3) Must be commented
      4) Must provide line by line programing and compilation wizard to allow for ease of editing.

   b. Graphic-based:

      1) Must provide actions for all possible situations
      2) Must provide programing and compilation wizard to allow for ease of editing.
      3) Must be documented

D. Operator Interface

1. Standard graphics—Provide graphics for all mechanical systems and floor plans of the building. This includes each chilled water system, hot water system, chiller, boiler, air handler, and all terminal equipment. Point information on the graphic displays shall dynamically update. Show on each graphic all input and output points for the system. Also show relevant calculated points such as set points.

2. Show terminal equipment information on a “graphic” summary table. Provide dynamic information for each point shown.

3. The contractor shall provide all the labor necessary to install, initialize, start up, and troubleshoot all operator interface software and its functions as described in this section. This includes any operating system software, the operator interface database, and any third-party software installation and integration required for successful operation of the operator interface.

4. Contractor shall provide necessary programming to create all reports refered to in Part 2 Operator Interface Software

3.16 Control system checkout and testing

A. Perform a three-phase commissioning procedure consisting of field I/O calibration and commissioning, system commissioning and integrated system program commissioning. Document all commissioning information on commissioning data sheets that shall be submitted prior to acceptance testing. Commissioning work that requires shutdown of system or deviation from normal function shall be performed when the operation of the system is not required. The commissioning must be coordinated with the owner and construction manager to ensure systems are available when needed. Notify the operating personal in writing of the testing schedule so that authorized personnel from the owner and construction manager are present throughout the commissioning procedure.

B. Phase I – Field I/O Calibration and Commissioning

1. Verify that each control panel has been installed according to plans, specifications and approved shop drawings. Calibrate, test, and have signed off each control sensor and device. Commissioning to include, but not be limited to:

a. Sensor accuracy at 10, 50 and 90% of range.
b. Sensor range.
c. Verify analog limit and binary alarm reporting.
d. Point value reporting.
e. Binary alarm and switch settings.
f. Actuator and positioner spring ranges if pneumatic actuation is utilized.
g. Fail safe operation on loss of control signal, pneumatic air, electric power, network communications, etc.

C. Phase II – System Commissioning

1. Each BMS program shall be put on line and commissioned. The contractor shall, in the presence of the owner and construction manager, demonstrate each programmed sequence of operation and compare the results in writing. In addition, each control loop shall be tested to verify proper response and stable control, within specified accuracy. System program test results shall be recorded on commissioning data sheets and submitted for record. Any discrepancies between the specification and the actual performance will be immediately rectified and re-tested.

D. Phase III - Integrated System Program Commissioning

1. Tests shall include, but not be limited to:
a. Data communication, both normal and failure modes.

b. Fully loaded system response time.
c. Impact of component failures on system performance and system operation.
d. Time/Date changes.
e. End of month/ end of year operation.
f. Season changeover.
g. Global application programs and point sharing.
h. System backup and reloading.
i. System status displays.
j. Diagnostic functions.
k. Power failure routines.
l. Battery backup.
m. Smoke Control, vents, in concert with Fire Alarm System testing.
n. Testing of all electrical and HVAC systems with other division of work.
o. Year 2000 compliance test.

2. Sub Systems shall also be tested and commissioned.

   a. Compressed Air System

      1) Test all high pressure piping (80 PSI) at 100 PSI sustained for 24 hours. Pressure loss shall not exceed 10 PSI at the end of the 24-hour test period.

      2) Test all low-pressure piping (25 PSI and below) at 30 PSI sustained for 24 hours. Pressure loss shall not exceed 3 PSI at the end of the 24-hour period.

3. Submit for approval, a detailed acceptance test procedure designed to demonstrate compliance with contractual requirements. This Acceptance test procedure will take place after the commissioning procedure but before final acceptance, to verify that sensors and control devices maintain specified accuracy and the system performance does not degrade over time.

4. Using the commissioning test data sheets, the contractor shall demonstrate each point. The contractor shall also demonstrate 100 percent of the system functions. The contractor shall demonstrate all points and system functions until all devices and functions meet specification.

5. The B.M.S. contractor shall supply all instruments for testing. Instruments shall be turned over to the owner after acceptance testing.

6. All test instruments shall be submitted for approval prior to their use in commissioning.

   a. Test Instrument Accuracy:
      1) Temperature: 1/4F or 1/2% full scale, whichever is less.
      2) Pressure: High Pressure (PSI): ½ PSI or 1/2% full scale, whichever is less.
      3) Low Pressure: 1/2% of full scale (in w.c.)
      4) Humidity: 2% RH
      5) Electrical: 1/4% full scale

7. After the above tests are complete and the system is demonstrated to be functioning as specified, a thirty-day performance test period shall begin. If the system performs as specified throughout the test period, requiring only routine maintenance, the system shall be accepted. If the system fails during the test, and cannot be fully corrected within eight hours, the owner may request that performance tests be repeated.

E. Additional testing, debugging and fine tuning

1. Provide an additional 100 hours of appropriate highest labor cost category to be used at the owner's discretion to test, debug and fine tune the system during standard business hours.

3.17 Control system demonstration and acceptance

A. Demonstration

1. Prior to acceptance, the control system shall undergo a series of performance tests to verify operation and compliance with this specification. These tests shall occur after the Contractor has completed the installation, started up the system, and performed his/her own tests.

2. The tests described in this section are to be performed in addition to the tests that the contractor performs as a necessary part of the installation, start-up, and debugging process and as specified in the “Control System Checkout and Testing” article in Part 3 of this specification. The engineer will be present to observe and review these tests. The engineer shall be notified at least 10 days in advance of the start of the testing procedures.

3. The demonstration process shall follow that approved in Part 1, “Submittals.” The approved checklists and forms shall be completed for all systems as part of the demonstration.

4. The contractor shall provide at least two persons equipped with two-way communication and shall demonstrate actual field operation of each control and sensing point for all modes of operation including day, night, occupied, unoccupied, fire/smoke alarm, seasonal changeover, and power failure modes. The purpose is to demonstrate the calibration, response, and action of every point and system. Any test equipment required to prove the proper operation shall be provided by and operated by the contractor.

5. As each control input and output is checked, a log shall be completed showing the date, technician's initials, and any corrective action taken or needed.

6. Demonstrate compliance with Part 1, "System Performance."

7. Demonstrate compliance with sequences of operation through all modes of operation.

8. Demonstrate complete operation of operator interface.

9. Additionally, the following items shall be demonstrated:

    a. DDC control loop response. The contractor shall supply trend data output in a graphical form showing the step response of each DDC control loop. The test shall show the loop's response to a change in set point, which represents a change of actuator position of at least 25% of its full range. The sampling rate of the trend shall be from 10 seconds to 3 minutes, depending on the speed of the loop. The trend data shall show for each sample the set point, actuator position, and controlled variable values. Any loop that yields unreasonably under-damped or over-damped control shall require further tuning by the Contractor.

    b. Demand limiting. The contractor shall supply a trend data output showing the action of the demand-limiting algorithm. The data shall document the action on a minute-by-minute basis over at least a 30-minute period. Included in the trend shall be building kW, demand limiting set point, and the status of sheddable equipment outputs.

    c. Optimum start/stop. The contractor shall supply a trend data output showing the capability of the algorithm. The change-of value or change-of-state trends shall include the output status of all optimally started and stopped equipment, as well as temperature sensor inputs of affected areas.

d. Interface to the building fire alarm system.

e. Operational logs for each system that indicate all set points, operating points, valve positions, mode, and equipment status shall be submitted to the architect/engineer. These logs shall cover three 48-hour periods and have a sample frequency of not more than 10 minutes. The logs shall be provided in both printed and electronic formats.

10. Any tests that fail to demonstrate the operation of the system shall be repeated at a later date. The contractor shall be responsible for any necessary repairs or revisions to the hardware or software to successfully complete all tests.

B. Acceptance

1. All tests described in this specification shall have been performed to the satisfaction of both the engineer and owner prior to the acceptance of the control system as meeting the requirements of completion. Any tests that cannot be performed due to circumstances beyond the control of the contractor may be exempt from the completion requirements if stated as such in writing by the engineer. Such tests shall then be performed as part of the warranty.

2. The system shall not be accepted until all forms and checklists completed as part of the demonstration are submitted and approved as required in Part 1, "Submittals."

3.18 Cleaning

A. The contractor shall clean up all debris resulting from their activities daily. The contractor shall remove all cartons, containers, crates, etc., under his/her control as soon as their contents have been removed. Waste shall be collected and placed in a designated location.

B. At the completion of work in any area, the contractor shall clean all work, equipment, etc., keeping it free from dust, dirt, and debris, etc.

C. At the completion of work, all equipment furnished under this section shall be checked for paint damage, and any factory-finished paint that has been damaged shall be repaired to match the adjacent areas. Any cabinet or enclosure that has been deformed shall be replaced with new material and repainted to match the adjacent areas.

3.19 Training

A. The Contractor shall provide competent instructors to give full instruction to designated personnel in the adjustment, operation and maintenance of the system installed. Factory employed/certified instructors shall be thoroughly familiar with all aspects of the subject matter they are to teach. All training shall be held during normal work hours of 8:00 a.m. to 4:30 p.m. weekdays.

B. Provide a minimum of four (4) on-site, on-line, or classroom training sessions throughout the contract period for personnel designated by the owner. Each session shall be a minimum of four (4) hours each

C. Provide two additional training sessions at 6 and 12 months following building's turnover. Each session shall be three days in length and must be coordinated with the building owner.

D. D. Provide 10 (Ten) hours of site specific training for Owner's operating personnel. Training shall include:

1. Day-to-day Operators:

a. Proficiently operate the system

b. Understand control system architecture and configuration

c. Understand DDC system components

d. Understand system operation, including DDC system control and optimizing routines (algorithms)

e. Operate the workstation and peripherals

f. Log on and off the system

g. Access graphics, point reports, and logs

h. Adjust and change system set points, time schedules, and holiday schedules

i. Recognize malfunctions of the system by observation of the printed copy and graphical visual signals

j. Understand system drawings and Operation and Maintenance manual

k. Understand the job layout and location of control components

l. Access data from DDC controllers and ASCs

m. Operate portable operator's terminals

2. Advanced Operators:

a. Make and change graphics on the workstation

b. Create, delete, and modify alarms, including annunciation and routing of these

c. Create, delete, and modify point trend logs and graph or print these both on an ad-hoc basis and at user-definable time intervals

d. Create, delete, and modify reports

e. Add, remove, and modify system's physical points

f. Create, modify, and delete programming

g. Add panels when required

h. Add operator interface stations

i. Create, delete, and modify system displays, both graphical and others

j. Perform DDC system field checkout procedures

k. Perform DDC controller unit operation and maintenance procedures

l. Perform workstation and peripheral operation and maintenance procedures

m. Perform DDC system diagnostic procedures

n. Configure hardware including PC boards, switches, communication, and I/O points

o. Maintain, calibrate, troubleshoot, diagnose, and repair hardware

p. Adjust, calibrate, and replace system components

3. System Managers/Administrators:

a. Maintain software and prepare backups

b. Interface with job-specific, third-party operator software

c. Add new users and understand password security procedures

E. Since the Owner may require personnel to have more comprehensive understanding of the hardware and software, additional training must be available from the Contractor. If such training is required by the Owner, it will be contracted at a later date. Provide description in the Technical Proposal of available local and factory customer training.

F. Provide course outline and materials in accordance with the "Submittals" article in Part 1 of this specification. The instructor(s) shall provide one copy of training material per student.

G. The instructor(s) shall be factory-trained instructors experienced in presenting this material.

3.20 Sequence of operations

A. Chilled Water System (Variable Primary):

1. The lead chiller (CH-1or CH -2), lead chilled water pump (CHP 1 or CHWP 2) and lead condenser water pump (CWP-1 or CWP-2) shall be selected by operator command to the controls system.
2. The lead chilled water pump shall be energized when the air handling unit is calling for cooling.
3. The chilled water pump variable speed drive shall start at low speed and shall modulate to maintain the chilled water system differential pressure sensor set point at location indicated on the drawings. The variable speed drive shall be set to modulate no more than 10% change in water flow rate per minute. The rate of change shall be confirmed with the chiller manufacturer.
4. On proof of chilled water flow, the lead chiller shall be enabled.
5. With the chiller enabled, the 2-position evaporator valve in the chiller discharge shall open, closing an end switch wired in series with the evaporator flow sensor, and chiller internal controls shall maintain chiller leaving water set point.
6. After the variable speed drives modulate to the minimum chiller flow rate, the bypass control valve shall modulate open to maintain a pressure differential setpoint. Upon a rise in flow above the chiller minimum flow rate, the bypass control valve shall close.

7. Modulate the normally open condenser water discharge control valve to maintain a condensing pressure corresponding to 70°F, adjustable. The valve shall close when the chiller is not in operation.
8. Upon a rise in the lead chiller capacity above approximately 85%(adjustable) of full load capacity for a period of 15 minutes (adjustable), the lag chilled water pump, condenser water pump and chiller shall be energized and shall have the same sequence of operation as the lead chiller. With the lag chiller in operation, the pumps and chillers shall modulate together in parallel. Upon a drop in chiller capacity below 35% of full load capacity (adjustable) for a period of 30 minutes (adjustable), the lag chiller and pumps shall be de-energized.
9. Chiller plant controls shall be approved by the chiller manufacturer in writing, by notation on the control shop drawings.
10. Whenever any condenser water pump is running, modulate the cooling tower fan motors in sequence to maintain common condenser water supply temperature set point. Condenser water supply temperature shall be reset to 5°F above the calculated ambient wet bulb temperature between the limits of 70°F and 85°F.
11. The existing condenser water treatment system controls shall be activated when either condenser water pump operates.
12. Water level control switch in the either tower basin shall open the slow-acting make-up water control valve.
13. A separate thermostat with element located in each tower basin shall activate each basin heater to maintain basin water temperature.

B. Air Handling Unit AHU-1:
   1. AHU-1 shall be automatically started and stopped by the BAS. In the occupied mode, the controls shall be energized.
   2. The minimum outside air dampers shall open, and the relief damper shall remain closed.
   3. When the return air temperature is below 60 degrees F (adjustable), the unit shall operate in the warm-up mode: the minimum outside air damper shall close, the chilled water control valve shall remain closed, and the hot water control valves in terminal units shall modulate to maintain 95 degrees F (adjustable) leaving air temperature until the return air temperature sensor is satisfied.
   4. Upon completion of the morning warm-up cycle, the unit shall operate in its normal mode and minimum outside air dampers shall open. The maximum outside air and relief dampers shall remain closed.
   5. Modulate the return air damper to maintain mixed air plenum static pressure as measured by a static pressure sensor in the mixed air plenum at the set point determined by the test and balance work.
   6. Modulate the chilled water valve in sequence to maintain coil scheduled leaving air temperature set points.
   7. The variable speed drive shall modulate the fan speed to maintain a constant duct static pressure.

8. Upon a drop in outside air enthalpy below return air enthalpy, the economizer shall be enabled. With the unit operating in the Economizer Mode, modulate the return, relief and maximum outside air dampers to maintain cooling coil discharge air temperature set point. The return air dampers shall modulate closed simultaneously as the relief and maximum outside air dampers modulate open. The exhaust fan (EF-1) shall be energized and vary speed with supply fan. [Continue monitoring of the supply and return air offset CFM, and limit the maximum open position of the return air damper to the offset set point.] If the maximum outside air dampers are fully open and the set point is still not satisfied, the chilled water valve shall be modulated open to satisfy demand. A low limit control with averaging element, sensing air entering the coils shall override other damper controls and shall modulate the maximum outside air, relief, and return dampers to limit mixed air temperature at 50 F minimum (adjustable).
9. A separate low limit safety, sensing air entering the cooling coil, set at 40 F adjustable, shall stop the fan, close the outside air dampers and open the return air damper.
10. On power interruption or fan shutdown, the minimum and maximum outside air, and relief dampers, and chilled water valve shall close; the return air damper and hot water valve shall open. The interlocked exhaust fans.
11. On activation of the fire alarm system relay, the system shall shut down.
12. On selection by fire alarm system relays, the system shall operate in one of the following modes:
    a. Pressurization – minimum and maximum outside air dampers open, chilled water valve fully open, [return air fan off], interlocked exhaust fans off, return and relief dampers closed, [terminal units open to full primary air,] [occupied/unoccupied switches overridden to full airflow,] low limit safeties locked out, and other controls normal.
    b. Purge – same as above, but [return air fan and] interlocked exhaust fans on, relief damper full open.
    c. Shutdown – system shall stop.
13. With the air handling unit in the off mode and the space temperature below night setback set point, the unit shall be energized to operate as in the warm-up mode to maintain the night setback set point.

C. Hot Water System

1. Hot Water Pump HWP-1, shall be activated upon a drop in outside air dry bulb temperature below 55 degrees F (adjustable) and shall be de-activated upon a rise in outside air temperature above 70 degrees F (adjustable).
2. Boilers, B-1 & B-2, shall be controlled by a “lead-lag” controller. Upon a call for either boiler to operate, the boiler’s respective hot water pump,[

BP-1 or 2], shall be energized. Upon proof of flow, the boiler controls shall be activated. The boilers shall be staged on and off to maintain a primary loop supply water temperature of 180 °F (adjustable).

3. The primary loop supply water temperature shall be reset to maintain water temperatures according to the following schedule:

a.	Outside air temperature:	Loop Water temperature:
	a. 55°F	120°F
	b. 20°F	180°F

END OF SECTION

SECTION 15155

PACKAGED WATER-COOLED CHILLER

PART 1 - GENERAL

1.01 GENERAL REQUIREMENTS

A. General Conditions: Refer to the General Conditions, the supplementary General Conditions and the Special Conditions, all provisions of which apply t work under this section as if written in full herein.

B. The scope of work described in these Specifications and/or indicated on the Drawings shall include (except where otherwise noted) the furnishing of all materials, equipment, appurtenances, accessories, connections, labor, etc. required and/or necessary to completely install, clean, inspect, adjust, text, balance and leave in safe and proper operating condition all mechanical systems. All mechanical work shall be accomplished by workmen skilled in the various trades involved.

1.02 DESCRIPTION

A. Furnish and install all packaged water-cooled chillers of the size, type, capacity and characteristics as shown on the equipment schedules and herein described.

B. Equipment schedules and specifications are based on the one manufacturer listed on the schedule. Other manufacturers of equal quality and performance may be submitted to the Engineer for review. When substitution of equipment is made, the Contractor shall be responsible for the costs of any item and engineering and construction revisions necessary in his or any other contract or trade that may be required to satisfy plans and specifications.

PART 2 - PRODUCTS

2.01 GENERAL

A. The unit is to be completely factory assembled and wired in a single package complete with screw compressor(s), cooler, condenser, starting control and safety and operating controls. It is to be given a complete factory operating and control sequence test under load conditions and is to be shipped with full operating charge of R-22 or R-134a and full oil charge.

B. The unit shall be built in accordance with all applicable national and local codes including the ANSI B9.1 safety code; the National Electrical Code and applicable ASME code for Unfired Pressure Vessels. The unit shall also include ETL certification and labeling.

2.02 COMPRESSORS

A. The overall compressor design shall include a suction cooled motor, integral lubrication system utilizing compressor pressure differential and semi-hermetic design.

B. The rotors shall be precision made from ductile cast iron. Male rotors are to have five (5) lobes and female rotors six (6) lobes.

C. The casing shall be constructed from a high strength iron casting, having reinforced double wall construction, to provide a rigid structure and minimize transmission of noise.

D. Four roller bearings shall be used to support the rotors and be designed to absorb the radial loads. Four ball bearings are also required to absorb the axial thrust and to position the rotors.

E. An 80 mesh reinforced stainless steel strainer shall be provided at the suction of the compressor. A two-pole hermetic squirrel cage motor shall be supplied. This shall be wound for all three phase operation. A dust-proof terminal box, located in an accessible location on the compressor, shall contain all connection terminals.

F. An oil separator which is an integral part of the compressor compartment shall be furnished. An impingement plate shall be directly connected to the discharge end of the compressor. An easily removable 150 mesh stainless steel oil strainer shall be installed in the compressor body.

G. An electric crankcase oil heater shall be provided to maintain the proper oil temperature when the system is not in operation.

2.03 CONSTRUCTION

A. The unit shall be constructed from painted, heavy gauge, galvanized steel frame with built-in skid and lifting holes. Components are to be arranged for easy access and all compressors and heat exchangers are easily removed and replaced.

2.04 WATER-COOLED CONDENSER

A. Condenser shall be shell and tube type, with water in the tubes, and sized for full refrigerant pump down capacity. The condenser shall have removable heads on

both ends for tube cleaning and servicing. A subcooler shall be provided as an integral part of the condenser. The condenser shall be built in accordance with ASME code for unfired pressure vessels and stamped accordingly. Waterside working pressure shall be a minimum of 125 psig and the refrigerant working pressures shall be a minimum of 350 psig. The condenser shall be leak tested at working pressure and include relief and purge valves.

2.05 EVAPORATOR

A. Cooler shall be direct expansion, shell and tube type. The shell shall be fabricated from seamless carbon steel pipe, with finned copper tubes and tube sheets of heavy gauge carbon steel. The tubes shall be roller-expanded into the tube sheets. Water control baffles shall be of cold-rolled steel and coated to resist corrosion. The heads shall be constructed of carbon steel with multiple pass baffles and shall be removable to permit access to the tubes from either end. The cooler shall be insulated with not less than 3/4" of closed cell foamed plastic. Cooler shall be designed, constructed and inspected to comply with current ASME code for unfired pressure vessels. Shell side (water) design working pressure is to be a minimum of 150 psig and tube side (refrigerant) design working pressure is to be a minimum of 200 psig.

B. The coolers are to be circuited so that each compressor is connected to an independent refrigerant circuit.

2.06 CAPACITY CONTROL

A. An infinitely variable capacity control system shall be provided that is capable of exactly matching the demand requirement of the system. A microprocessor based controller shall modulate a compressor slide valve in response to supply water temperature and shall maintain water temperature within 1/2 degrees F of setpoint. This system is to provide precise and stable control of supply water temperature over the complete range of operating conditions. It shall be capable of a system capacity control range from 100% to 0% at specified conditions.

2.07 REFRIGERANT CIRCUIT

A. Each compressor shall be provided with an independent refrigerant circuit for maximum standby protection. Parallel compressors are not acceptable due to oil control problems and cross contamination.

B. Each refrigerant circuit shall include expansion valve, sight glass, moisture indicator, solenoid valve, replaceable core filter drier, liquid line shut-off valves, charging and gauge connections, discharge line check valve and discharge line shut-off valve.

2.08 CONTROL CENTER

A. The Control Center is to be a fully enclosed steel cabinet with hinged access doors. Dual compartments, separating safety and operating controls from the power controls, are to be provided. Controls shall include:

1. High pressure cutout, manual reset
2. Low pressure cutout, manual reset
3. Compressor, solid state, thermal sensing overloads, manual reset
4. High refrigerant discharge temperature, manual reset
5. Low water temperature freeze protection, manual reset
6. Phase failure protection against low voltage, phase imbalance or phase reversal
7. Power terminal block and optional control transformer for single or dual source power
8. Compressor starter including current sensing overload protection
9. Microprocessor based controller and factory installed sensor including integral anti-cycle protection
10. Complete labeling of all control components
11. Numbered terminal strips for easier wire tracing

2.09 WYE-DELTA MOTOR STARTER

A. Provide motor starter.

PART 3 - EXECUTION

3.01 GENERAL

A. Unit shall be installed in strict accordance with manufacturer's recommendations.

B. Provide "waffle pad" type vibration isolators at each point that comes in contact with the floor.

END OF SECTION

SECTION 15170

HVAC INSULATION

PART 1 - GENERAL

1.01 GENERAL REQUIREMENTS

A. All work specified herein shall be accomplished in accordance with the applicable requirements of Section 15000 - HVAC General.

1.02 WORK INCLUDED

B. The work done under this section shall include all labor, materials, accessories, services and equipment necessary to furnish and install all insulation, complete, as indicated on the Drawings and as specified herein.

PART 2 - PRODUCTS

2.01 MATERIALS

A. Materials as specified in this section shall be manufactured by Armstrong, Johns-Manville, Knauf, Pittsburgh-Corning, Certainteed, Pabco, Dow Chemical, Owens Corning or approved equal.

B. Insulation thicknesses shall be as shown in the following table:

Minimum Pipe Insulation			Insulation Thickness for Pipe Sizes					
Piping System Types	Fluid Temperature Range		Runouts 2 in. +	1 in. and Less	1-1/4 to 2 in.	2-1/2 to 4 in.	5 and 6 in.	8 in. and Larger
	°C	°F	In.	In.	In.	In.	In.	In.
(Heating Systems Steam & Hot Water)								
High Pressure/Temp	152-238	306-450	2.0	3.0	4.0	4.0	4.0	4.5
Medium Pressure/Temp	122-151	251-305	2.0	2.5	3.0	4.0	4.0	4.0
Low Pressure/Temp	94-121	201-250	1.5	2.0	3.0	3.0	3.5	3.5
Low Temperature	49-93	120-200	1.0	1.0	2.0	2.0	2.0	2.5
Steam Condensate (for Feed Water)	Any	Any	1.0	1.0	1.5	2.0	2.0	2.5
(Cooling Systems)								
Chilled Water*, Geothermal Heat Pump Loop, Condensate	4.5-13	40-55	1.0	1.0	1.5	1.5	1.5	1.5
Refrigerant or Brine	Below 4.5	Below 40	1.0	1.0	1.5	1.5	1.5	1.5

+ Runouts to Individual Terminal Units (not exceeding 12 ft. in length)
* For chilled water piping located in attics and other unconditioned spaces (excluding return air plenums), increase the pipe insulation thickness by 1/2" for pipe sizes up through 8". Insulation for piping 10" and larger shall be 2-1/2" thick.

C. Unless noted otherwise, the abovementioned piping systems inside the building shall be insulated with a 5 lb/cu. ft. (nominal) density sectional fiberglass insulation with a thermal conductivity (k factor) not to exceed 0.24. The jacket shall be fire retardant with a suitable vapor barrier. All joints and seams shall be sealed vapor tight. All joints and seams shall be lapped in place to form a continuous vapor barrier covering. All seams shall then be covered with "All Service Jacket" (ASJ) 3" wide tape. The tape shall match the jacket. The tape shall be squeegeed in place to provide complete adhesion of the tape to the jacket and to provide a continuous vapor barrier covering. Exterior water piping shall be heat traced (Refer to Section 15052 - Piping and Accessories).

D. Piping installed outdoors shall be insulated with cellular glass insulation, Pittsburgh-Corning "Foamglas" or approved equal. Insulation thickness required to prevent condensation shall be determined by the manufacturer for worse case ambient conditions.

1. Install with all service jacket and in accordance with manufacturer's recommendations.
2. Where heat tracing is specified, oversize insulation to allow space for heat tape.

E. Equipment shall be insulated in the same manner as specified for the associated piping. Suitable provisions shall be made for breaking flanges as may be required for maintenance. Hot water pumps do not get insulated unless specifically called for. The following equipment, but not limited to, requires insulation: expansion tanks, air separators, chemical treatment "shot type" feeders, storage tanks, etc.

F. Provide high density preformed pipe insulation inserts at all pipe hangers. Inserts shall be equal to Foamglas by Pittsburgh Corning or calcium silicate. Provide ribbed hanger saddles by Centerline, Buckaroos, Inc. or approved equal.

G. All exposed insulated piping in mechanical rooms below 10'-0" AFF shall be protected by a corrugated aluminum jacket with bands 3'-0" on center.

H. "Circuit setter" type balancing valves shall be insulated with polyisocyanurate or extruded polystyrene block insulation with matching PVC cover. Insulation shall by easily removable for service. Valve insulation shall be as manufactured by Extol or approved equal.

I. All outside air ducts shall be insulated. Outside air ducts located within

mechanical rooms shall be rigid fiberglass board as described above. All other outside air ducts shall be blanket type insulated as described above.

J. Sheet metal supply, return, and outside air ductwork in non-air conditioned areas shall be insulated with 2" thick 1-1/2 lb/cu. ft. fiberglass blanket duct insulation with foil faced vapor barrier (R-6 min.).

K. Single wall boiler breeching and diesel exhaust within the building shall be externally insulated with 2" thick calcium silicate block securely held in place with wire or metal bands.

L. Piping and/or breeching exposed to the weather and designated to be insulated shall be insulated in the same way it is insulated within the building for concealed areas. It shall then be weatherproofed with corrugated aluminum jacketing. It shall have 3/16" corrugations and shall be 0.016" thick with a factory attached moisture barrier continuously laminated across the full width of the jacketing. All pipe fittings, valves and specialties exposed to the weather shall be insulated and weatherproofed with aluminum jacketing. Childers Universe-E11 Jacs of the same metal as the jacketing shall be used. Jacketing shall have a 2" lap at all joints. Longitudinal laps shall be on the underneath side of horizontal runs and slightly offset from one another. The outside of the longitudinal lap shall also have a 1" hem turned under. All laps shall be made with weatherproof mastic. Wrap the jacketing tightly and smoothly and secure with aluminum or stainless steel bands. Bands shall not be more than 12" on center and a strap shall be placed at the circumferential laps. The lap shall have adequate mastic to make a tight joint. Excess mastic shall be removed from the outside to provide a neat and professional appearance.

M. Provide insulating tape over all piping specialties to prevent condensation such as drain valves, drain plugs, combination temperature/pressure test plugs, etc.

N. All insulation must meet applicable codes for Flame Spread and Smoke developed ratings.

PART 3 - EXECUTION

3.01 INSTALLATION

A. Shop drawing submittals shall include a complete package of materials and methods intended for use as described in this section.

B. All work shall be in strict accordance with applicable codes, ordinances and the manufacturer's recommendations.

C. All work shall be performed in a professional workmanlike manner and standard

trade practice. It shall be smooth in appearance and suitable for finish painting.

D. All exterior piping shall be installed with a corrugated aluminum jacket with bands 3'-0" on center.

E. Fiberglass pipe insulation shall be applied to clean (free of rust) dry pipe prior to leak testing. Chilled and condenser water systems shall not be operated until the insulation is completely installed with a vapor barrier in place.

END OF SECTION

SECTION 15210

WATER SPECIALTIES

PART 1 - GENERAL

1.01 GENERAL REQUIREMENTS

A. All work specified herein shall be accomplished in accordance with the applicable requirements of Section 15000 - HVAC General.

1.02 WORK INCLUDED

A. Receipt, unloading, handling, proper storage and protection from damage of all materials.

B. Layout and coordination of work with other trades.

C. The work under this section shall include all labor materials, accessories, services, and equipment necessary to furnish and install all water specialties, as indicated on the Drawings and as specified herein.

PART 2 - PRODUCTS

2.01 EXPANSION TANKS

A. Furnish and install for each closed hydronic system expansion tanks which shall be of the horizontal type for ceiling mounting, and as shown on the Drawings.

B. Each tank shall be built in accordance with the ASME Code for unfired Pressure Vessels and shall be completely air tight. Each tank shall be completely air tight. Each tank shall be complete with gauge glass and all other required tappings. Each tank shall be delivered to the job with factory prime coat. Each tank shall be suitable for 125 psi working pressure and 350 degrees F maximum water operating temperature.

C. Each tank shall be provided with 3" x 3" x 3/8" clip angles welded to each tank at the factory and shall have a minimum of one clip angle for each 200 pounds of weight when completely full of water. Each tank shall have not less than four of these clip angles and shall be hung as high as possible. Hangers shall be from the top cord of the bar joists.

D. Each tank shall be fitted with sight glass. Extreme care shall be taken installing the sight glass to be sure that it is absolutely air tight. Provide sight glass valves

to allow replacement of the sight glass during operation.

E. Provide an approved air release fitting in the bottom of each tank on the point of connection to the system. The fitting shall incorporate, or install separately, an air tube set from the bottom of the tank to a point 8" from the top of the tank for the purposes of air level control.

F. Each tank shall be fitted with a hose end bottom drain for complete drain down. Provide a gate valve in the tank header to system line.

G. Insulate tank with 1" fiberglass insulation.

2.02 AIR SEPARATOR

A. Furnish and install where shown on the Drawings a Rolairtrol air separator with strainer as manufactured by Bell and Gossett Co. or approved equal. Capacity shall be as shown on the Drawings.

B. Unit to be constructed according to the ASME Code stamped with “U” symbol and supplied with Form U-la certifying National Board compliance. Strainer to be of galvanized steel having 3/16" diameter perforations and a free area of not less than five times the cross sectional area of the connecting pipe.

2.03 PRESSURE REDUCING AND AUTOMATIC FILL VALVES

A. Provide and install for each system as shown on the Drawings any automatic fill consisting of a Bell and Gossett 7, Dunham, Taco or approved equal all brass 3/4" pressure relief valve set at 30 pounds and a Bell and Gossett 12, Dunham, Taco or approved equal 3/4" iron body brass trim pressure reducing valve set at 20 pounds. Provide and install 3/4" bypass lines with 3/4" gate valves for quick fill.

PART 3 - EXECUTION

3.01 INSTALLATION

A. All water specialties as herein specified shall be installed and adjusted to suit the system needs and requirements. The installation shall be performed in strict accordance with the manufacturer’s recommendations.

END OF SECTION

SECTION 15514

COPPER-FINNED BOILERS

PART 1 - GENERAL

1.01 GENERAL REQUIREMENTS

A. All work specified herein shall be accomplished in accordance with the applicable requirements of Section 15000 - HVAC General.

B. Furnish and install boilers of the size, type, capacity and characteristics as shown on the equipment schedules and herein described.

C. Equipment schedules and specifications are based on the one manufacturer listed on the schedule. Other manufacturers of equal quality and performance may be submitted to the Engineer for approval. When substitution of equipment is made, the Contractor shall be responsible for the costs of any item and engineering and construction revisions necessary in his or any other contract or trade that may be required to satisfy plans and specifications.

1.02 WORK INCLUDED

A. The work under this section shall include all labor, materials, accessories, services and equipment necessary to furnish and install the high pressure steam generating system complete as indicated on the Drawings and as specified herein.

1.03 RELATED WORK

A. Refer to Section 15150 – Automatic Controls for additional work required.

1.04 ACCEPTABLE MANUFACTURERS

A. Boiler shall be the make and model number shown on the Drawings or equivalent by Raypak (Model TP), Lochinvar (Model CH), Teledyne Laars (Series H), or RBI (Series 8000).

PART 2 - PRODUCTS

2.01 GENERAL

A. Packaged boiler shall be [natural] [LP] gas-fired water tube type designed for hot water service, including circulating pump and expansion tank, with capacity as shown on the Drawings.

B. Boiler shall be AGA certified. Burners shall be natural draft, stainless steel, and mounted in a removable drawer for service.

C. Heat exchanger shall be constructed of solid copper water tubes with extruded integral fins. Tubes shall be vertically set and secured into glass coated cast headers that form the top and bottom of the heat exchanger. The tubes shall be arranged in a circular pattern and shall completely enclose the combustion chamber. Heat exchanger shall carry a 5-year limited warranty.

D. Pump shall be centrifugal type with cast iron body and bronze-fitted for hot water service. See Drawings for type and capacity.

E. Expansion tank shall be bladder type with the water contained inside the bladder, sized to accept the expanded water without pressure increase of more than 10% of the fill pressure.

F. Combustion chamber shall be insulated with a lightweight cast refractory backed up with fiberglass insulation.

G. Boiler jacket shall be heavy gauge galvanized (or equal) steel with factory-applied baked enamel.

H. Boiler controls shall be provided with a 110 to 24-volt transformer. The main gas valve shall be 24 volts.

I. Boiler controls shall provide for 80% modulation in firing rate and shall allow a leaving water temperature as low as 105 degrees F (40 degrees C) without condensation. Provide electronic ignition of the pilot. Gas safety controls shall prove pilot flame prior to opening of the main gas valve. The pilot shall be lit only when the boiler is calling for heat.

J. Burner capacity reduction shall be controlled by an electric (self- contained) sensing element reset by the outdoor air temperature. At 32 degrees F outside air temperature, the leaving water temperature shall be 200 degrees F (105 degrees C) adjustable, and at 70 degrees F (21 degrees C) outside air temperature, the leaving water temperature shall be 110 degrees F (43 degrees C). Provide a mechanical preset high-limit control set at 245 degrees F (118 degrees C) and an electric high-limit automatic reset control set at 242 degrees F (116 degrees C).

K. Package shall include flow switch, or pressure differential switch, to prove water flow before the controls can be energized. The boiler controls shall be interlocked through the controls of the pump that is providing water flow for the boiler.

L. Provide draft hood as required for AGA approval. Provide ASME pressure relief valve, combination temperature and pressure gauge, drain valve, and other accessories recommended by the manufacturer and required for a complete installation.

M. Boilers shall be of the sealed combustion type, shall be capable of being staged in multiple boiler arrangements for sequential firing, shall bear the ASME stamp, shall be A.G.A. Listed, and shall be approved for a working pressure of 160 psi. Boiler shall be capable of being vented directly "thru-wall" or conventionally into a stack. Boiler shall be A.G.A. approved for either indoor or outdoor usage.

N. NOx rating shall be less than 30 ppm.

2.02 AUXILIARY EQUIPMENT

A. Provide high-pressure gas regulator, or additional gas regulator, where the available gas pressure is above the manufacturer's standards.

B. Provide controls to continue pump operation until the heat exchanger is cooled and refractory heat is absorbed. Provide pump interlock wiring with the controls.

C. Provide antifreeze in the system as noted on the Drawings for freeze protection down to –20 degrees F (-30 degrees C). Capacity of the boiler shall be adjusted to meet the output required on the Drawings with the derating required by the antifreeze.

D. Provide a one-shop (batch) feeder for the addition of water treatment and antifreeze to the system.

E. Provide pressure gauges for inlet and outlet of boiler and the pump, reading in small increments for measurement of pressure drop.

PART 3 - EXECUTION

3.01 MECHANICAL SPACE AND INSTALLATION

A. The boiler shall be installed in a space reserved for the boiler and provided with combustion air and ventilation required by the codes and shown on the Drawings.

B. The boiler flue pipe shall be UL Listed and shall be the full size of the draft hood outlet. Provide a UL Listed vent cap and accessories as required for a complete installation.

C. The floor of the mechanical space shall be noncombustible, or a noncombustible pad shall be installed under the boiler, as required by the boiler manufacturer's

AGA rating.

D. Provide city water for make-up to the boiler. Include a water make-up assembly which includes a reduced-pressure type of backflow preventer acceptable to the local authority having jurisdiction. The mechanical room must be provided with an adequate drain and the floor must be waterproofed (or install the boiler in a 20-gauge metal pan with soldered joints, and connect the pan to the drain with a 1" (25-mm) type M copper pipe.)

E. Connect the gas with a gas cock installed above ground and outside of the mechanical space, in addition to the gas cock furnished with each boiler gas train. Install gas regulator as required to reduce gas pressure to that required by the boiler.

F. Connect hot water lines and pump to the boiler with adequate drains to flush and drain the system. Install pressure gauges on inlet and outlet of boiler and pump. Install the relief valve and carry full size to a point acceptable for discharge of hot water.

G. Make the proper electrical connections for the boiler and equipment. Provide a disconnect means for the boiler controls, to turn off power to the main gas valve from an easily accessible point inside the mechanical room door.

H. Fill the boiler with water, and pressure-test the boiler and system up to the rating of the relief valve. Clean the system with trisodium phosphate or equal cleaner, flush the system to remove all trash and dirt, and refill the system, including inhibitor and antifreeze as specified.

I. Bleed the gas line in a safe manner and energize the boiler controls.

3.02 TEST

A. Observe the ignition of the pilot and the main burner to make sure they are smooth and complete.

B. Check out the safety controls and verify that they are functioning properly. Report the actual and design pressure drop through the boiler.

C. Set the operating controls for the proper temperature.

D. Operate the boiler for no less than 2 hours or return at the beginning of the heating season for completion of this test. Vary the outdoor sensor temperature from 32 degrees F (0 degrees C) to 70 degrees F (21 degrees C) and observe the reset of the boiler output. Record the pressure drop through the boiler and across the pump.

E. Observe the pressure increase as the system heats up, and verify that the increase in pressure does not exceed 10%.

F. Provide a written start-up report on company letterhead stating that ignition is proper, safety controls have been checked, and operating controls are set and functioning properly.

3.03 OWNER'S INSTRUCTIONS

A. Provide on-site training of adequate time to satisfy the Owner in proper operation and maintenance of the boiler and trim.

B. Provide the Owner's operator with three (3) copies of written instructions for operation and maintenance of the system. A letter shall be included listing the materials given to the operator.

END OF SECTION

SECTION 15830

UNITARY EXHAUST AND SUPPLY FANS AND VENTILATORS

PART 1 - GENERAL

1.01 DESCRIPTION

A. Refer to specification section 15000 - HVAC General, all of which applies to work described in this section as if written in full herein.

B. Furnish and install all unitary exhaust and supply fans and ventilators of the size, type, capacity and characteristics as shown on the equipment schedules and herein described.

C. Acceptable manufacturers include only those whose products have been in satisfactory use in similar service for not less than five (5) years.

D. Electrical Standards: Provide electrical motors and products which have been Listed and Labeled by Underwriters Laboratories Inc. and comply with NEMA Standards.

E. Certification, Fan Performance: Provide fans whose performance is certified by AMCA under the specified conditions.

PART 2 - PRODUCTS

2.01 CENTRIFUGAL AND AXIAL FANS AND VENTILATORS

A. All units shall be rigidly constructed of materials suitable for the intended service and shall be installed with all accessories listed on the Drawings.

B. Fan wheels and blades shall be constructed of aluminum and shall be statically and dynamically balanced at the factory.

PART 3 - EXECUTION

3.01 GENERAL

A. All units shall be installed in accordance with manufacturer's recommendations and as shown on the Drawings.

B. Units shall be interlocked and controlled as indicated on the Drawings.

END OF SECTION

SECTION 15950

TESTING, ADJUSTING AND BALANCING (TAB)

PART 1 - GENERAL

1.01 DESCRIPTION

A. Refer to specification section 15000 - HVAC General, all of which applies to work described in this section as if written in full herein.

B. The work described by this section of the specifications consists of furnishing all materials, instruments, labor, and appurtenances to test, adjust and balance all of the HVAC systems furnished and installed under Division 15 of the specifications.

C. The TAB agency shall be a subcontractor of the General Contractor and shall not report to or be paid by the HVAC Contractor. The HVAC subcontractor shall be responsible to cooperate with and provide for the balancing subcontractor any and all materials, services, labor, etc. to facilitate completion of the balancing work.

1.02 QUALITY ASSURANCE

A. The TAB agency and its specialist shall be certified members of Associated Air Balance Council (AABC) or certified by the National Environmental Balance Bureau (NEBB) to perform TAB service for HVAC, and vibration and sound testing of equipment. The certification shall be maintained for the entire duration of duties specified herein. The TAB agency shall have been in business for at least the past five years and must be free of disciplinary action by either the AABC or the NEBB during that time.

B. All TAB technicians performing actual TAB work shall be experienced and must have done satisfactory work on a minimum of 3 projects comparable in size and complexity of this project and must be certified so by the TAB agency in writing.

C. The basic instrumentation shall be calibrated to accuracy requirements by its manufacturer, AABC or NEBB Procedural Standards for Testing, Adjusting and Balancing of Environmental Systems. Provide calibration history of the instruments to be used for test and balance purpose.

D. One or more of the applicable AABC, NEBB or SMACNA publications, supplemented by the ASHRAE Handbooks and requirements stated herein shall be the basis for planning, procedures, tolerances and reports. Final report shall cite the exact names of publications used as a basis or reference for the TAB work

or reports.

PART 2 - PRODUCTS

2.01 MATERIALS

A. Provide plastic plugs to seal holes drilled in ductwork for test purposes.

B. Provide for repair of insulation removed or damaged for TAB work to match installation.

PART 3 - EXECUTION

3.01 TAB PROCEDURES

A. TAB shall be performed in accordance with the requirements of the Standard under which the TAB agency is certified, either AABC or NEBB.

B. During TAB all related system components shall be in full operation. Fan and pump rotation, motor loads and equipment vibration shall be checked and corrected as necessary before proceeding with TAB. Set controls and/or block off parts of distribution systems to simulate design operation of variable volume air or water systems for test and balance work.

C. Adjustment of the temperature controls shall be coordinated by the TAB work specialist in conjunction with the Automatic Temperature Control Company's Engineer. Both shall cooperate to simulate a complete cycle for every system in every mode of operation (automatic, economizer, fire emergency, etc.).

D. Coordinate TAB procedures with any phased construction completion requirements for the project. Provide TAB reports for each phase of the project prior to partial final inspections of each phase of the project.

3.02 AIR SYSTEMS TAB

A. Systems shall be tested, adjusted and balanced so that air quantities and temperatures at outlets are as shown on the Contract Drawings and so that the distribution from supply outlets is uniform over the face of each outlet.

B. Direct reading velocity meters may be used for comparative adjustment of individual outlets, but air quantities in ducts having velocities of 1,000 feet per minute or greater shall be measured by means of pitot tubes and inclined gauge manometers. Instrument test opening enclosures shall be provided as required at the direction of the TAB agency.

C. Adjustments shall be made in such a manner that splitter and volume adjusters close to air outlets will have the least pressure drop consistent with volume requirements. Primary balancing shall be obtained by adjustment of the dampers at branch duct take-offs. Adjustable fan drives shall be used for making final adjustments of total air quantities. Additional dampers or other air volume adjusters required to accomplish the balancing and adjusting shall be furnished and installed as part of the HVAC work.

D. Artificially load air filters by partial blanking to produce air pressure drop of at least 90 percent of the design final pressure drop.

E. Check and readjust factory set minimum and maximum air terminal unit flow rates if necessary. Balance air distribution on full cooling maximum. Reset room thermostats and check operation from maximum to minimum cooling, to the heating mode, and back to cooling. Record and report the heating coil leaving air temperature when in the maximum heating mode.

F. Adjust fan speeds to provide design air flow. Adjust V-belt drives, including fixed pitch pulley requirements.

G. After completion of the testing, adjusting and balancing of the air systems, six (6) copies of a recognized complete set of reports showing the minimum following information shall be submitted to the Engineer for review:

1. Systems inspection narrative on equipment and installation for conformance with design
2. Duct Air Leakage Test Report
3. Systems Readiness Report
4. TAB report covering flow balance and adjustments, performance tests, vibration tests and sound tests. Required information:
    a. Location of each air outlet or inlet. This shall be presented in the form of a reduced size floor plan showing outlet number keyed to the outlet number in the report.
    b. Dimensions or size of each outlet or inlet
    c. Type and manufacturer of diffusers, grilles, registers. Indicate duty as supply, return, exhaust, etc.
    d. Cfm of air as indicated on the Drawings for each outlet or inlet with corresponding velocity
    e. Velocity of air as measured and corresponding cfm at which system has been balanced and adjusted, for each outlet or inlet
    f. Velocity of air measured and corresponding cfm, after each complete system has been balanced and adjusted, for each main branch or zone duct at the supply fan, the return fan and the exhaust fan, as the case may be
    g. After each complete system has been balanced and adjusted, the

total cfm at fan discharge, the total return air to the apparatus, the total outside air to the apparatus, the total outside air to the apparatus, static pressure at fan outlet, total static pressure for apparatus, fan speed, motor amperage for each phase and voltage

5. Narrative of uncorrected installation deficiencies noted during TAB and applicable explanatory comments on test results that differ from design requirements

H. The above testing, adjusting and balancing shall be performed for the first season of the year, cooling season or heating season, which occurs at the completion of the building. Additional balancing and adjusting which may be required for the season of the year next following shall be performed as part of the work under this specification.

3.03 WATER SYSTEMS TAB

A. Water circulating systems shall be adjusted and balanced so that water quantities circulated through the apparatus will be as specified.

B. Where no meters are provided, the adjustment of individual coil circuits shall be based on return water temperatures and pressure drops, provided air balancing and adjusting has been satisfactorily completed first. Temperature control valves shall be wide open during the balancing. Balancing cocks and valves shall be set. If this results in excessive total flow, this shall be corrected by partial closing of pump discharge valves during further adjusting and balancing. Settings of cocks, valves, etc. shall be permanently marked so that they can be restored if disturbed at any time.

C. After completion of the testing, adjusting and balancing of the water systems, six (6) copies of a recognized complete set of reports showing the minimum following information shall be submitted to the Engineer for review:

1. Systems inspection narrative on equipment and installation for conformance with design
2. Systems Readiness Report
3. TAB report covering flow balance and adjustments, performance tests, vibration tests and sound tests. Required information:
   a. Identification of each piece of apparatus, manufacturer, size, model, rows, etc.
   b. Flow as indicated on the Drawings for each piece of apparatus and corresponding pressure drop
   c. Temperatures, pressures and corresponding water flow at each coil after each complete system has been balanced and adjusted
   d. Head, gpm, bhp, volts, amps for each pump specified
   e. Suction and discharge pressures at each pump and corresponding

water flow after each complete system has been balanced and adjusted

4. Narrative of uncorrected installation deficiencies noted during TAB and applicable explanatory comments on test results that differ from design requirements

3.04 VIBRATION TESTING

A. Furnish instruments and perform vibration measurements for all rotating HVAC equipment of 1/2 horsepower and larger, including centrifugal/screw compressors, cooling towers, pumps, fans and motors.

B. Record initial measurements for each unit of equipment on test forms and submit a report to General Contractor. Where vibration readings exceed the allowable tolerance, the HVAC Contractor shall correct the problem and the TAB agency shall verify the corrections are done for final reporting.

3.05 SOUND TESTING

A. Perform and record required sound level measurements in approximately 15% of all rooms as designated by the General Contractor.

B. Take measurements with a calibrated sound level meter and octave band analyzer of the accuracy required by AABC or NEBB.

C. Where measure sound levels exceed specified levels, the installing contractor or equipment manufacturer shall take remedial action approved by the General Contractor and the necessary sound tests shall be repeated.

3.06 MARKING OF SETTINGS AND TEST PORTS

A. Following the approval of the final TAB Report, the setting of all HVAC adjustment devices including valves, splitters and dampers shall be permanently marked by the TAB Specialist so that adjustment can be restored if disturbed at any time. Style and colors used for markings shall be coordinated with the General Contractor.

B. The TAB Specialist shall permanently and legibly identify the location points of duct test ports. If the ductwork has exterior insulation, the identification shall be made on the exterior side of the insulation. All penetrations through ductwork and ductwork insulation shall be sealed to prevent air leaks and maintain integrity of vapor barrier.

END OF SECTION

SPECIFICATIONS

SCOPE

A. INSTALL ALL ELECTRICAL WORK COVERED BY THESE SPECIFICATIONS AND APPROVED DRAWINGS. PROVIDE ALL MATERIAL, LABOR, TRANSPORTATION, TOOLS, SUPERVISION, ETC., NECESSARY TO COMPLETE THE TOTAL ELECTRICAL JOB. ALL ITEMS NOT SPECIFICALLY MENTIONED HEREIN WHICH ARE OBVIOUSLY NECESSARY TO MAKE A COMPLETE WORKING INSTALLATION SHALL BE PROVIDED.

B. ELECTRICAL COMPONENTS INCLUDING BUT NOT LIMITED TO CONDUCTOR SIZE, OVERCURRENT PROTECTIVE DEVICE AND DISCONNECT SWITCHES ARE BASED ON POWER REQUIREMENTS FOR EQUIPMENT SPECIFIED AS SHOWN ON THE CONTRACT DOCUMENTS. PRIOR TO INSTALLING WORK, CONTRACTOR SHALL COORDINATE ELECTRICAL REQUIREMENTS WITH EQUIPMENT OF ALL TRADES REQUIRING ELECTRICAL CONNECTIONS.

C. FINAL CONNECTIONS TO EQUIPMENT SHALL BE PER MANUFACTURER'S APPROVED WIRING DIAGRAMS, DETAILS AND INSTRUCTIONS. IT SHALL BE THE CONTRACTOR'S RESPONSIBILITY TO PROVIDE MATERIALS AND EQUIPMENT COMPATIBLE WITH ACTUAL EQUIPMENT SUPPLIED.

D. EXAMINATION OF BIDDING DOCUMENTS

1. EACH BIDDER SHALL EXAMINE THE BIDDING DOCUMENTS CAREFULLY AND MAKE WRITTEN REQUEST TO THE ENGINEER FOR INTERPRETATION OR CORRECTION OF ANY DISCREPANCIES, AMBIGUITY, INCONSISTENCY OR ERROR THEREIN. ANY INTERPRETATION OR CORRECTION WILL BE ISSUED BY THE ARCHITECT AS AN ADDENDUM. ONLY WRITTEN INTERPRETATION OR CORRECTIONS BY ADDENDUM SHALL BE BINDING. CONTRACTOR SHALL INCLUDE IN HIS BID, LABOR, MATERIALS AND METHODS OF CONSTRUCTION FOR COMPLETE INSTALLATION. AFTER AWARD OF CONTRACT, NO ALLOWANCE OR EXTRA COMPENSATION WILL BE MADE IN BEHALF OF THE CONTRACTOR DUE TO HIS FAILURE TO MAKE THE WRITTEN REQUESTS AS DESCRIBED ABOVE.

2. FAILURE TO REQUEST CLARIFICATION OF ANY INADEQUACY, OMISSION OR CONFLICT WILL NOT RELIEVE THE CONTRACTOR OF RESPONSIBILITY. THE SIGNING OF THE CONTRACT WILL BE CONSIDERED IMPLICITLY DENOTING THAT THE CONTRACTOR HAS A THOROUGH COMPREHENSION OF THE FULL INTENT AND SCOPE OF THE WORKING DRAWINGS AND SPECIFICATIONS.

CODES AND FEES

A. ALL WORK SHALL BE DONE IN ACCORDANCE WITH THE REQUIREMENTS OF THE ENFORCED EDITION OF THE NATIONAL ELECTRICAL CODE, N.F.P.A. 70 AND ALL LOCAL AND STATE CODES AND REGULATIONS. THE CONTRACTOR SHALL OBTAIN AND PAY FOR ALL PERMITS AND INSPECTIONS REQUIRED BY THE BUILDING AND SAFETY CODES AND ORDINANCES, AND THE RULES AND REGULATIONS OF ANY LEGAL BODY HAVING JURISDICTION.

WORKMANSHIP

A. THE DRAWINGS ARE DIAGRAMMATIC AND INDICATE THE GENERAL ARRANGEMENT OF ELECTRICAL EQUIPMENT. COORDINATE DEVICE LOCATIONS WITH EXISTING EQUIPMENT. DO NOT SCALE ELECTRICAL PLANS.

B. COORDINATE WITH ALL OTHER TRADES AND SUBCONTRACTORS PERFORMING WORK ON THIS PROJECT. MINOR OFFSETS IN LOCATIONS OF FIXTURES, DEVICES, ETC. SHALL BE MADE TO AVOID CONFLICTS WITH OTHER TRADES. SUCH MODIFICATIONS SHALL BE APPROVED BY THE ENGINEER PRIOR TO THE WORK BEING PERFORMED.

C. MOUNTING HEIGHTS, UNLESS OTHERWISE NOTED, ARE TO THE CENTER LINE OF THE EQUIPMENT AND/OR DEVICE EXCEPT THE MOUNTING HEIGHT OF SUSPENDED LIGHT FIXTURES WHICH IS TO THE BOTTOM OF FIXTURE.

D. CONTRACTOR SHALL BE RESPONSIBLE FOR REPLACING EQUIPMENT WHICH IS DAMAGED DUE TO INCORRECT FIELD WIRING PROVIDED UNDER THIS SECTION OR FACTORY WIRING IN EQUIPMENT PROVIDED UNDER THIS SECTION.

SUBSTITUTIONS

A. ALL COST INCURRED BY THE ACCEPTANCE OF SUBSTITUTIONS SHALL BE BORNE BY THE CONTRACTOR. PROOF FOR THE EQUALITY OF SUBSTITUTIONS SHALL BE BY THE CONTRACTOR.

U.L. LISTING

A. ALL ELECTRICAL ITEMS COVERED BY THIS SPECIFICATION SHALL BE U.L. LABELED AND LISTED FOR THEIR SPECIFIC USE.

WARRANTY

A. WORK SHALL BE WARRANTIED FOR A PERIOD OF ONE (1) YEAR FROM THE DATE OF ACCEPTANCE BY THE OWNER.

SPECIFICATIONS

GROUNDING

1. THE BUILDING ELECTRICAL SYSTEMS SHALL BE SOLIDLY GROUNDED. ALL NON-CURRENT CARRYING METAL PARTS OF THE ELECTRICAL SYSTEM, I.E., RACEWAYS, EQUIPMENT ENCLOSURES, FRAMES, JUNCTION AND OUTLET BOXES AND OTHER CONDUCTIVE ITEMS IN CLOSE PROXIMITY WITH ELECTRICAL CIRCUITS, SHALL BE GROUNDED TO PROVIDE A LOW IMPEDANCE PATH FOR POTENTIAL GROUND FAULTS.

2. EQUIPMENT GROUNDING CONDUCTORS SHALL BE INSTALLED IN ALL RACEWAYS AND CABLES.

B. RACEWAYS AND CONDUITS

1. CONDUITS INSTALLED IN DIRECT CONTACT WITH GRADE OR WITHIN CONCRETE SLABS SHALL BE SCHEDULE 40 PVC. CONDUITS CONCEALED WITHIN WALLS AND ABOVE CEILINGS, AND EXPOSED IN INDOOR AREAS SHALL BE ELECTRICAL METALLIC TUBING (E.M.T.). COUPLINGS SHALL BE STEEL SET SCREW TYPE FOR INDOOR LOCATIONS, AND COMPRESSION TYPE FOR OUTDOOR AND WET LOCATIONS. CONDUIT SHALL BE INTERMEDIATE OR GALVANIZED RIGID STEEL IN AREAS WHERE SUBJECT TO ABUSE.

2. CONDUITS SHALL BE RUN PARALLEL OR AT RIGHT ANGLES TO WALLS, CEILINGS, AND STRUCTURAL MEMBERS.

3. ALL RACEWAYS SHALL BE INSTALLED CONCEALED EXCEPT IN UNFINISHED SPACES OR WHERE INDICATED ON THE DRAWINGS.

4. FASTENERS AND SUPPORTS SHALL BE AS MANUFACTURED BY GEDNEY, EFCOR OR EQUAL. SUPPORTING DEVICES SHALL BE THOSE AS MANUFACTURED FOR A SPECIFIC PURPOSE. NAILS, WIRE OR PIPE STRAP SHALL NOT BE USED.

C. CONDUCTORS

1. ALL BRANCH CIRCUIT CONDUCTORS SHALL BE COPPER, 90°C, THHN/THWN INSULATION.

2. UNLESS NOTED OTHERWISE, SERVICE AND FEEDER CONDUCTORS SHALL BE COPPER, THHN/THWN-2 INSULATION. WHERE APPROVED, ALUMINUM CONDUCTORS SHALL BE COMPACT, AA-8000 SERIES, XHHW-2. 90°C.

3. WIRE NO. 8 AWG AND LARGER SHALL BE STRANDED, NO. 10 AND SMALLER SHALL BE SOLID.

4. ALL BRANCH CIRCUIT AND FEEDER CONDUCTORS, NO. 8 AWG AND SMALLER, SHALL BE COLOR CODED AS FOLLOWS (WHERE APPROVED BY THE AUTHORITY HAVING JURISDICTION):

120/208 VOLT SYSTEM	277/480 VOLT SYSTEM
PHASE A – BLACK	PHASE A – BROWN
PHASE B – RED	PHASE B – ORANGE
PHASE C – BLUE	PHASE C – YELLOW
NEUTRAL – WHITE	NEUTRAL – GREY
GROUND – GREEN	GROUND – GREEN

5. MC CABLE SHALL BE LIMITED TO BRANCH CIRCUITS CONCEALED IN WALLS AND ABOVE CEILINGS, AND MAY NOT BE RUN DIRECTLY INTO SURFACE MOUNTED EQUIPMENT. ALL CIRCUIT HOMERUNS FROM THE PANELBOARD TO THE FIRST BRANCH CIRCUIT DEVICE SHALL BE ROUTED IN CONDUIT. MC CABLE SHALL NOT BE ALLOWED FOR WIRING TO MECHANICAL EQUIPMENT (EXCEPT FOR WITHIN DWELLING UNITS).

6. SIZES INDICATED ARE FOR INSTALLATION IN A MAXIMUM 30 DEGREE C AMBIENT.

D. OUTLET/JUNCTION BOXES

1. ALL OUTLET/JUNCTION BOXES SHALL BE GALVANIZED STEEL. THERMOPLASTIC BOXES SHALL BE ACCEPTABLE FOR USE WHERE NM CABLE IS APPROVED.

2. WALL AND CEILING OUTLET BOXES SHALL BE 4" SQUARE, WITH A DEPTH OF 2 1/2". CEILING BOXES SHALL BE 4" OCTAGONAL WHERE REQUIRED DUE TO NUMBER OF WIRES.

E. PANELBOARDS

1. DISCONNECT SWITCHES AND BREAKERS SHALL BE MATCH EXISTING MANUFACTURER.

2. TYPEWRITTEN DIRECTORIES AND PANELBOARD DESIGNATION PLATES SHALL BE PROVIDED BY THE CONTRACTOR FOR ALL PANELBOARDS.

3. WIRE TERMINATION PROVISIONS FOR PANELBOARDS, CIRCUIT BREAKERS, SAFETY SWITCHES AND ALL OTHER ELECTRICAL APPARATUS SHALL BE LISTED AS SUITABLE FOR 75 DEGREE C. MINIMUM.

G. WIRING DEVICES

COMMERICAL GRADE

1. DUPLEX RECEPTACLES SHALL BE RATED 20 AMP, HUBBELL CR5362 OR APPROVED EQUAL.

2. TOGGLE SWITCHES SHALL BE 20 AMP, HUBBELL CS1221 OR APPROVED EQUAL.

3. DEVICE PLATES SHALL BE STAINLESS STEEL (UNLESS NOTED OTHERWISE).

4. COLOR OF DEVICES SHALL BE IVORY.

I. DISCONNECT SWITCHES

1. SAFETY-TYPE DISCONNECT SWITCHES SHALL BE HEAVY DUTY WITH QUICK-MAKE, QUICK-BREAK MECHANISM WITH INTERLOCKING COVER WHICH NORMALLY CANNOT BE OPENED WHEN THE SWITCH IS IN THE "ON" POSITION. SWITCH SHALL HAVE PROVISIONS FOR PAD-LOCKING IN THE OPEN OR CLOSED POSITION.

2. FUSIBLE DISCONNECT SWITCHES SHALL HAVE REJECTION-TYPE FUSEHOLDERS. FUSES SHALL BE NON-RENEWABLE, DUAL ELEMENT TIME-DELAY "RK1" OR RK5", OR AS SPECIFIED OTHERWISE.

3. ACCEPTABLE MANUFACTURERS: EATON/CUTLER HAMMER, G.E., SIEMENS OR SQUARE D.

M. SUBMITTALS

1. PANELBOARDS, WIRING DEVICES, SWITCHES AND DISCONNECTS, LIGHTING FIXTURES, AND FUSE SUBMITTALS SHALL BE REQUIRED, AND ARE TO INCLUDE MANUFACTURER'S DATA, TEST REPORTS, PERFORMANCE DATA AND CERTIFICATIONS.

O. RENOVATIONS AND ADDITIONS

1. WORK REQUIRING INTERRUPTION OF ELECTRICAL POWER, WHICH WOULD ADVERSELY AFFECT THE NORMAL OPERATION OF THE OWNER'S PROPERTY, SHALL BE DONE AT A TIME OTHER THAN NORMAL WORKING HOURS. NORMAL WORKING HOURS SHALL BE CONSIDERED EIGHT A.M. TO FIVE P.M. MONDAY THROUGH FRIDAY. SCHEDULE ALL OUTAGES WITH THE OWNER AND ARCHITECT PRIOR TO SHUTDOWN.

2. PRIOR TO SUBMITTING BIDS ON THE PROJECT, VISIT THE SITE TO BECOME AWARE OF EXISTING CONDITIONS WHICH MAY AFFECT THE COST OF THE PROJECT.

3. WHERE WORK UNDER THIS PROJECT REQUIRES EXTENSION, RELOCATION, RECONNECTION OR MODIFICATION TO EXISTING EQUIPMENT OR SYSTEMS, THE EQUIPMENT OR SYSTEMS SHALL BE RESTORED TO OPERATING CONDITION. EXTEND NEW HOMERUNS OR CIRCUIT EXTENSIONS WHERE REQUIRED. DISCONNECT AND REMOVE ALL EQUIPMENT INDICATED TO BE DEMOLISHED, INCLUDING OUTLET BOXES, DEVICES, RACEWAYS AND CONDUCTORS.

4. CARE SHALL BE EXERCISED IN THE REMOVAL AND STORAGE OF EQUIPMENT INDICATED TO BE RELOCATED, REMOVED AND/OR REUSED. PRIOR TO PLACING BACK INTO SERVICE, EXISTING EQUIPMENT SHALL BE CLEANED AND/OR RELAMPED. MARRED OR CHIPPED SURFACES SHALL BE TOUCHED-UP. DISPOSE OF ANY MATERIAL NOT WISHED TO BE KEPT BY THE OWNER.

5. PROVIDE ALL CORING, CUTTING AND PATCHING TO EXISTING WALLS, FLOORS, ETC. REQUIRED FOR THE REMOVAL OF EXISTING WORK OR THE INSTALLATION OF NEW WORK.

ELECTRICAL GENERAL NOTES

1. SPECIFIED MANUFACTURERS INDICATED ON DRAWINGS DO NOT IMPLY THEY MEET THE REQUIREMENTS OF ARRA, INCLUDING BUY AMERICAN. IT IS THE RESPONSIBILITY OF THE CONTRACTOR TO VERIFY AND DOCUMENT THAT ALL PRODUCTS MEET ARRA REQUIREMENTS.

2. WHEN CONDUCTOR OR CONDUIT SIZE IS INDICATED FOR BRANCH CIRCUIT HOMERUN, THE CONDUCTOR AND CONDUIT SIZE INDICATED SHALL BE USED FOR THE COMPLETE CIRCUIT.

3. REFER TO THE APPROPRIATE DRAWINGS (INCLUDING ARCHITECTURAL DRAWINGS) FOR THE EXACT LOCATION OF EQUIPMENT INSTALLED UNDER OTHER DIVISIONS OF THE DOCUMENTS WHICH REQUIRE ELECTRICAL SERVICE.

4. EQUIPMENT GROUNDING CONDUCTORS ARE TO BE INCLUDED IN ALL RACEWAYS.

ELECTRICAL ABBREVIATIONS

A	AMPERE	MCB	MAIN CIRCUIT BREAKER
AFCI	ARC FAULT CIRCUIT INTERRUPTER	MLO	MAIN LUGS ONLY
AFF	ABOVE FINISHED FLOOR	NTS	NOT TO SCALE
AIC	AMPERE INTERRUPTING CAPACITY	MH	MOUNTING HEIGHT
AWG	AMERICAN WIRE GAUGE	ST	SHUNT TRIP
BC	BELOW CEILING	TC	TIME CLOCK
BKR	BREAKER	TV	TELEVISION
CKT	CIRCUIT	TVSS	TRANSIENT VOLTAGE SURGE SUPP.
FACP	FIRE ALARM CONTROL PANEL	UL	UNDERWRITER LABORATORIES
GFI	GROUND FAULT INTERRUPTER	UNO	UNLESS NOTED OTHERWISE
G OR GND	GROUND	V	VOLTS
HP	HORSE POWER	W	WATTS
JB	JUNCTION BOX	WP	WEATHERPROOF COVER (RECEPTACLES SHALL BE WEATHER-RESISTANT TYPE)
KCMIL	THOUSAND CIRCULAR MILS	Y	WYE

ELECTRICAL SYMBOL LEGEND

SYMBOL	DESCRIPTION	HEIGHT
J	JUNCTION BOX, CEILING/WALL/FLOOR MOUNTED	
X-1,3,5	ARROWHEAD INDICATES HOMERUN. X-1,3,5 ADJACENT TO HOMERUN ARROWHEADS INDICATES HOMERUN TO PANEL X CIRCUIT NUMBERS 1,3, AND 5.	
3,5	INDICATES CIRCUIT CONTINUATION OF CIRCUITS 3 AND 5 OF PANEL X.	
	MARKS ACROSS RACEWAY SYMBOLS INDICATE THE NUMBER OF #12 CONDUCTORS (2 PHASE, 1 NEUTRAL) UNLESS OTHERWISE NOTED. NO MARKS INDICATES TWO #12 CONDUCTORS. EQUIPMENT GROUNDING CONDUCTORS ARE NOT INDICATED BY MARKS.	
	RACEWAY/CABLE CONCEALED IN WALL AND/OR ABOVE CEILING	
	RACEWAY CONCEALED BELOW GRADE OR IN-SLAB	
	RACEWAY/CABLE CONCEALED IN WALL AND/OR ABOVE CEILING – EMERGENCY CIRCUIT	
	RACEWAY INSTALLED EXPOSED	
	PANELBOARD – WALL MOUNTED (RECESSED)	
	PANELBOARD – WALL MOUNTED (SURFACE)	
	MOTOR	
60/3/3R	NONFUSIBLE DISCONNECT SWITCH, RATING/POLES/NEMA ENCLOSURE	
60/3/3R/40	FUSIBLE DISCONNECT SWITCH, RATING/POLES/NEMA ENCLOSURE/FUSE RATING	
SIZE 2/3R	MAGNETIC MOTOR STARTER. NEMA SIZE RATING/ENCLOSURE (NEMA 1 IF NOT SHOWN)	
SIZE 2/3R	COMBINATION MAGNETIC MOTOR STARTER AND DISCONNECT MEANS, NEMA SIZE RATING/ENCLOSURE (NEMA 1 IF NOT SHOWN)	
D	DUCT MOUNTED SMOKE DETECTOR	

LEGEND NOTES

Lilly Young & Associates, Inc.
4275 SHACKLEFORD ROAD
SUITE 130
NORCROSS, GEORGIA 30093
(T)678.533.0300
(F)678.533.0301

THIS DRAWING IS THE PROPERTY OF LILLY YOUNG & ASSOCIATES INC AND IS NOT TO BE REPRODUCED IN WHOLE OR IN PART. IT IS NOT TO BE USED ON ANY OTHER PROJECT AND SHALL BE RETURNED UPON REQUEST. COPYRIGHT AS DATED LILLY YOUNG & ASSOCIATES INC. NOT VALID UNLESS SIGNED AND SEALED.

Print Record

GEORGIA REGISTERED PROFESSIONAL ENGINEER MARK LILLY 8-11-2010

COBB COUNTY ADMINISTRATION BUILDING
HVAC RENOVATIONS
10 EAST PARK SQUARE
MARIETTA, GEORGIA

COBB COUNTY PROPERTY MANAGEMENT DEPARTMENT

Revisions

Date 11AUG2010

Project No. 101012LY

Sheet Title
SPECIFICATIONS & LEGEND

Sheet No.
E0.01

Released for Construction

EXISTING PANELBOARD SCHEDULE - DPB

MAIN: 400A MLO | VOLTAGE: 480/277 | PHASE: 3 | WIRE: 4 | MOUNTING: | AIC:

CKT #	TRIP POLE	DESCRIPTION	LTG	REC	LOAD (KVA) MTR	A/C	HTG	KIT	MISC	PHASE A	B	C	LTG	REC	LOAD (KVA) MTR	A/C	HTG	KIT	MISC	DESCRIPTION	TRIP POLE	CKT #
1	20/3	ELEVATOR - COND. UNIT			5.8										3.9					AIR COMP-1	30/3	2
	--	(15HP)			5.8										3.9					--	--	
	--	--			5.8										3.9					--	--	
3	20/3	SUMP HEATER			0.4										0.8					FAN-4	20/3	4
	--	(3/4HP)			0.4										0.8					(1-1/2HP)	--	
	--	--			0.4										0.8					--	--	
5	30/3	CWP-1 & CWP-2			7.7										0.5					FAN-3	20/3	6
	--	7.5HP EA			7.7										0.5					(2HP)	--	
	--	--			7.7										0.5					--	--	
7	40/3	CT FAN (VFD)			7.5										0.4					FAN-2	20/3	8
	--	(20HP)			7.5										0.4					(3/4HP)	--	
	--	--			7.5										0.4					--	--	
9	20/3	CHP-1			3.0										3.0					HWP-1	20/3	10
	(NEW)	(7.5HP)			3.0										3.0					(7.5HP)	(NEW)	
	--	--			3.0										3.0					--	--	
11	20/3	CHP-1			3.0										1.5					BP-1 & BP-2	20/3	12
	(NEW)	(7.5HP)			3.0										1.5					(1HP EA)	(NEW)	
	--	--			3.0										1.5					--	--	
13	60/3	SPARE																		-	-/3	14
		--																		--		
		--																		--	--	
15	225/3	AH FAN			26.6										14.4					EF-1	90/3	16
		(75HP)			26.6										14.4					(40HP)	(NEW)	
		--			26.6										14.4					--	--	

LIGHTING (KVA):	0.0	0.0	0.0	162.0	0.0	0.0	0.0	0.0		0.0	0.0	74.7	0.0	0.0	0.0	0.0	CONNECTED LOAD (KVA):	236.7
RECEPTACLES (KVA):	0.0																DEMAND LOAD (KVA):	236.7
MOTORS (KVA):	236.7								PHASE A	79	284.8							
A/C (KVA):	0.0								PHASE B	79	284.8						CONNECTED LOAD (AMPS):	284.7
HEATING (KVA):	0.0								PHASE C	79	284.8						DEMAND LOAD (AMPS):	284.7
KITCHEN (KVA):	0.0									KVA	AMPS							
MISCELLANEOUS (KVA):	0.0																AMPACITY REQUIRED:	284.7

NOTE:
GTE SYLVANIA

EXISTING TO REMAIN

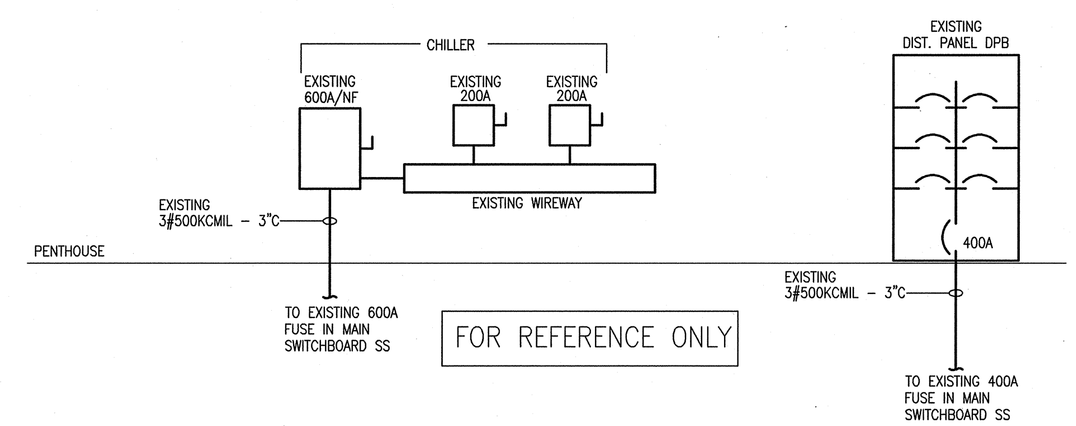

Lilly Young & Associates, Inc.
4275 SHACKLEFORD ROAD
SUITE 130
NORCROSS, GEORGIA 30093
(T)678.533.0300
(F)678.533.0301

THIS DRAWING IS THE PROPERTY OF LILLY YOUNG & ASSOCIATES INC AND IS NOT TO BE REPRODUCED IN WHOLE OR IN PART. IT IS NOT TO BE USED ON ANY OTHER PROJECT AND SHALL BE RETURNED UPON REQUEST. COPYRIGHT AS DATED LILLY YOUNG & ASSOCIATES INC. NOT VALID UNLESS SIGNED AND SEALED.

Print Record

GEORGIA REGISTERED PROFESSIONAL ENGINEER JAMES T. LILLY 8-11-2010

COBB COUNTY ADMINISTRATION BUILDING
HVAC RENOVATIONS
10 EAST PARK SQUARE
MARIETTA, GEORGIA

COBB COUNTY PROPERTY MANAGEMENT DEPARTMENT

Revisions

Date 11AUG2010
Project No. 101012LY

Sheet Title
PANEL SCHEDULES

Sheet No.
E0.02

Released for Construction

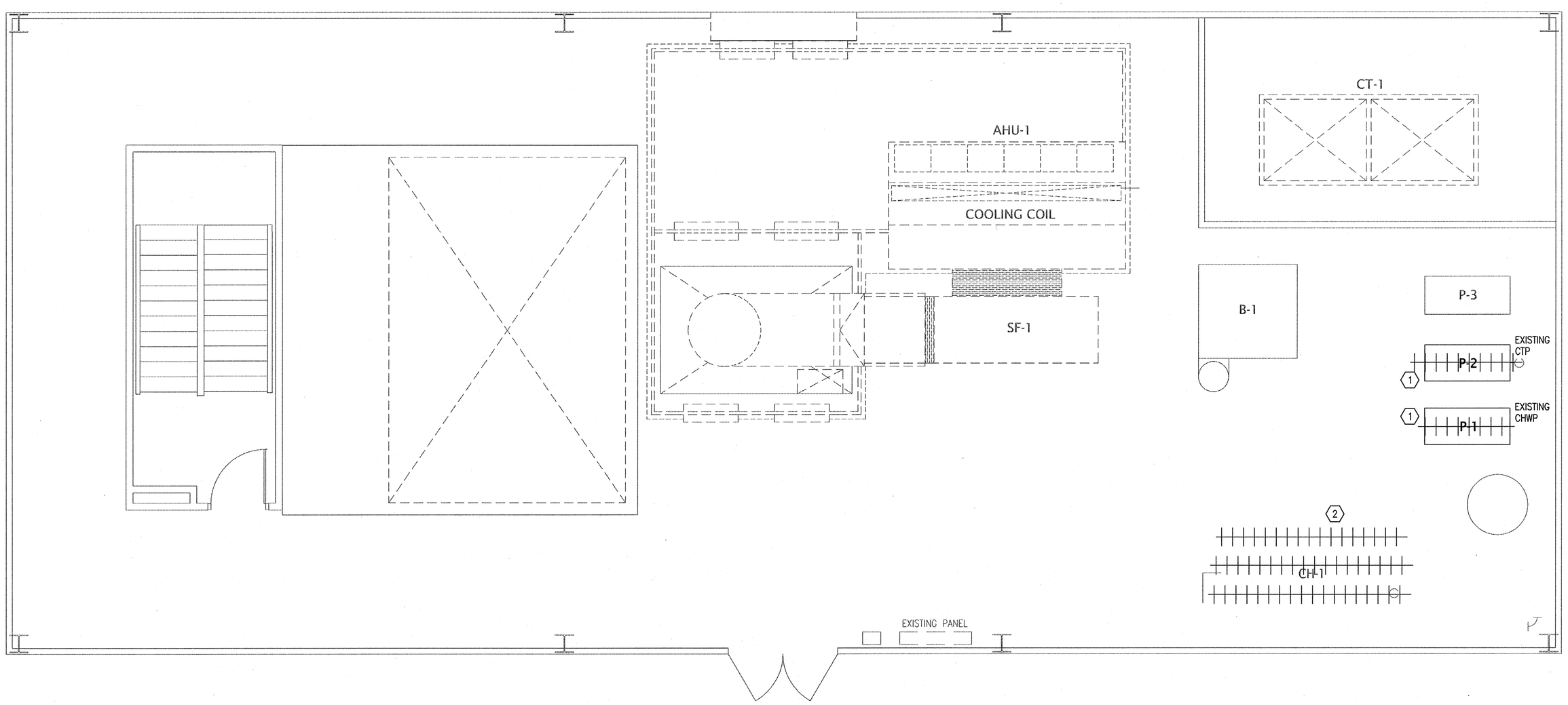

KEY NOTES:

1. EQUIPMENT TO BE REMOVED. DISCONNECT EQUIPMENT. REMOVE CONDUIT/WIRE.
2. CONDUIT AND WIRE TO BE RE-USED. TERMINATE AT AFTER DISCONNECTING IN PREPAREATION FOR NEW EQUIPMENT.

E1.01A PENTHOUSE– DEMO PLAN–PHASE 1

SCALE: 1/4" = 1'–0"

NORTH

Lilly Young & Associates, Inc.
4275 SHACKLEFORD ROAD
SUITE 130
NORCROSS, GEORGIA 30093
(T)678.533.0300
(F)678.533.0301

THIS DRAWING IS THE PROPERTY OF LILLY YOUNG & ASSOCIATES INC AND IS NOT TO BE REPRODUCED IN WHOLE OR IN PART. IT IS NOT TO BE USED ON ANY OTHER PROJECT AND SHALL BE RETURNED UPON REQUEST. COPYRIGHT AS DATED LILLY YOUNG & ASSOCIATES INC. NOT VALID UNLESS SIGNED AND SEALED.

Print Record

GEORGIA REGISTERED No. 07799 PROFESSIONAL ENGINEER JAMIE L. LILLY 8.11.2010

COBB COUNTY ADMINISTRATION BUILDING
HVAC RENOVATIONS
10 EAST PARK SQUARE
MARIETTA, GEORGIA

COBB COUNTY PROPERTY MANAGEMENT DEPARTMENT

Revisions

Date 11AUG2010

Project No. 101012LY

Sheet Title

PENTHOUSE - EXISTING PHASE 1

Sheet No.

E1.01A

Released for Construction

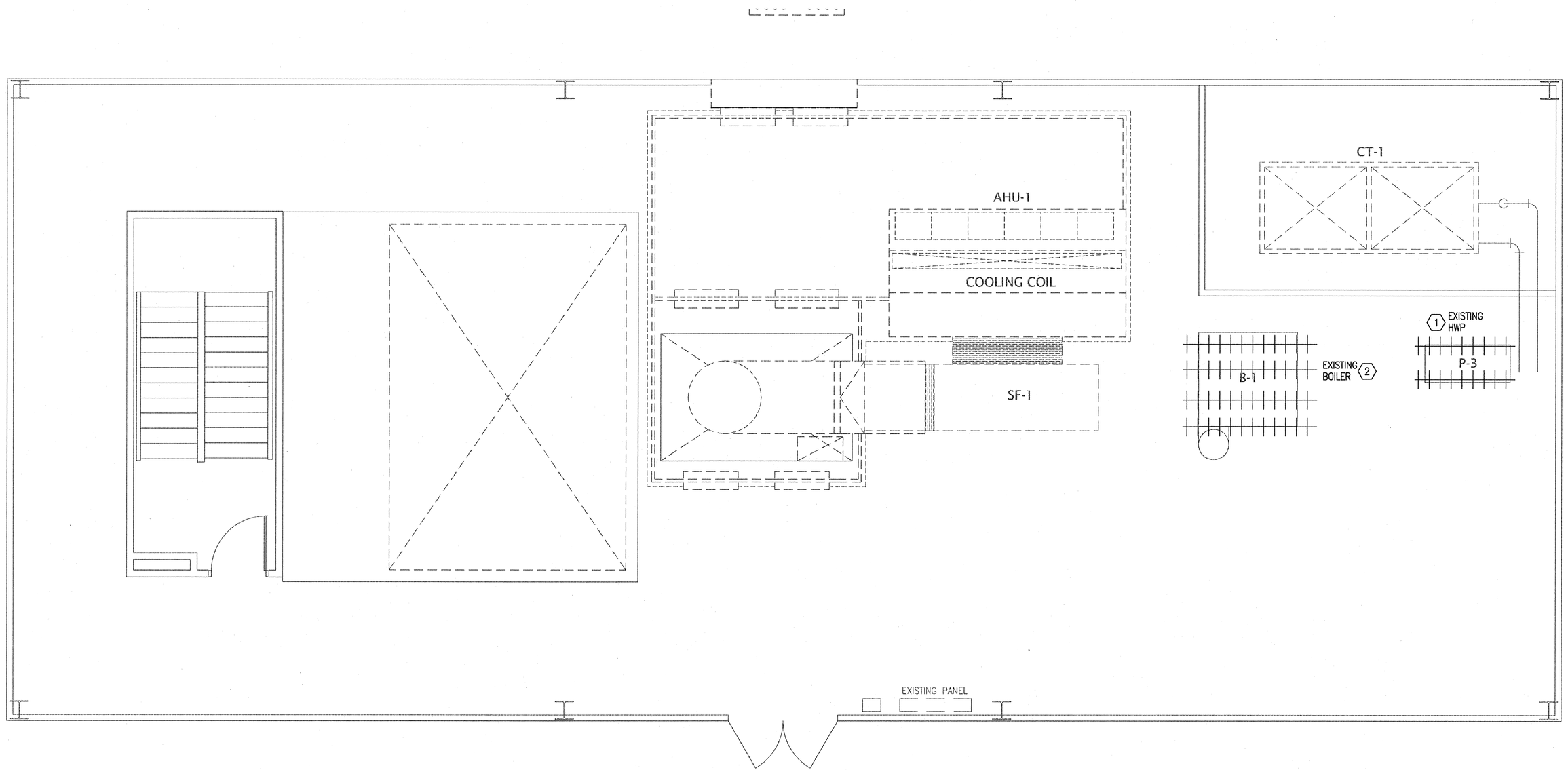

KEY NOTES:

1. EQUIPMENT TO BE REMOVED. DISCONNECT EQUIPMENT. REMOVE CONDUIT/WIRE.
2. CONDUIT AND WIRE TO BE RE-USED. TERMINATE AT AFTER DISCONNECTING IN PREPAREATION FOR NEW EQUIPMENT.

E1.01B PENTHOUSE– DEMO PLAN–PHASE 2

SCALE: 1/4" = 1'-0"

Lilly Young & Associates, Inc.
4275 SHACKLEFORD ROAD
SUITE 130
NORCROSS, GEORGIA 30093
(T)678.533.0300
(F)678.533.0301

THIS DRAWING IS THE PROPERTY OF LILLY YOUNG & ASSOCIATES INC AND IS NOT TO BE REPRODUCED IN WHOLE OR IN PART. IT IS NOT TO BE USED ON ANY OTHER PROJECT AND SHALL BE RETURNED UPON REQUEST. COPYRIGHT AS DATED LILLY YOUNG & ASSOCIATES INC. NOT VALID UNLESS SIGNED AND SEALED.

Print Record

GEORGIA REGISTERED No. 27294 PROFESSIONAL ENGINEER JAMES T. LILLY
8-11-2010

COBB COUNTY ADMINISTRATION BUILDING
HVAC RENOVATIONS
10 EAST PARK SQUARE
MARIETTA, GEORGIA

COBB COUNTY PROPERTY MANAGEMENT DEPARTMENT

Revisions

Date 11AUG2010

Project No. 101012LY

Sheet Title
PENTHOUSE - EXISTING PHASE 2

Sheet No.
E1.01B

Released for Construction

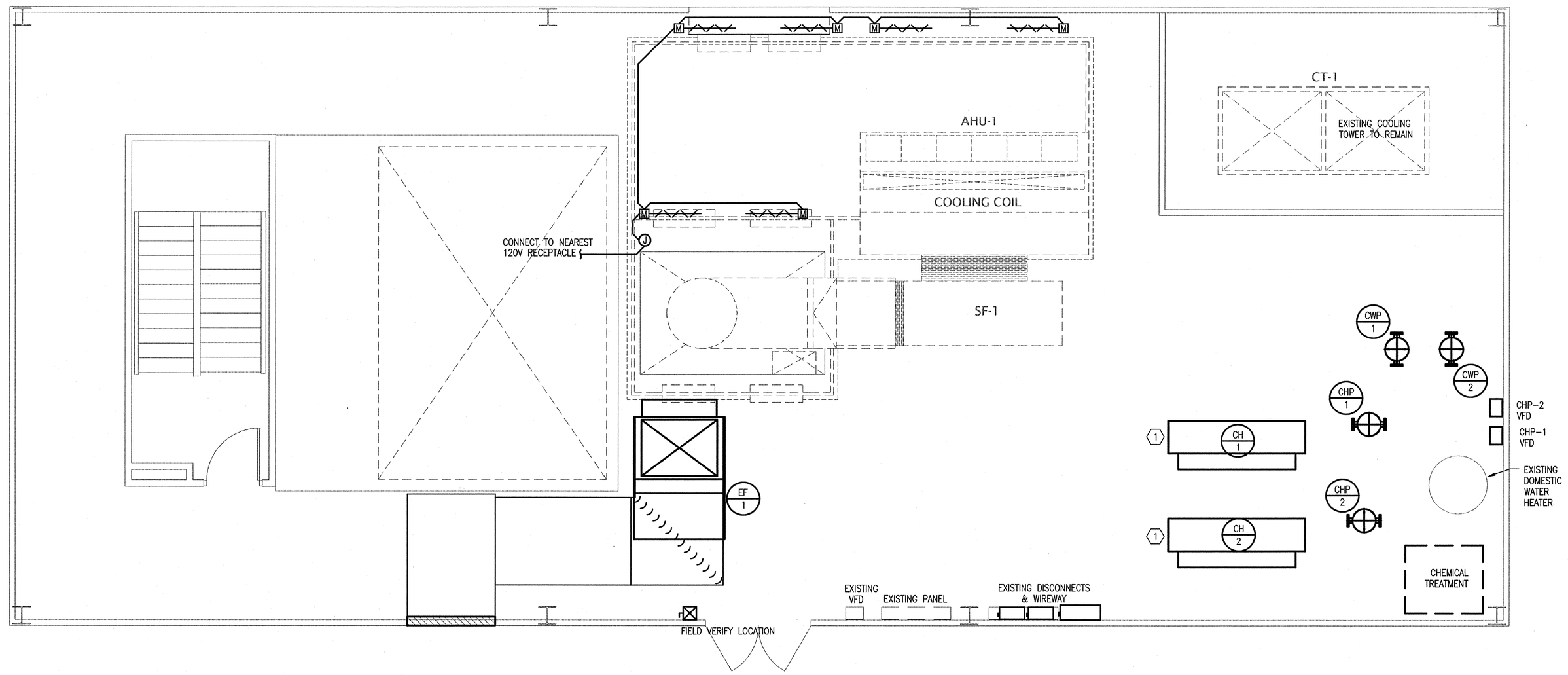

E1.02A PENTHOUSE– BASIS OF DESIGN–PHASE 1

SCALE: 1/4" = 1'–0"

MECHANICAL EQUIPMENT CONNECTION SCHEDULE

DESCRIPTION	CIRCUIT	CONDUCTORS	STARTER/ DISCONNECT	NOTES
CH–1	EXISTING	EXISTING	EXISTING	.
CH–2	EXISTING	EXISTING	EXISTING	.
CHP–1	DPB–9	3#12,1#12G – 1/2"C	DIV 15	.
CHP–2	DPB–11	3#12,1#12G – 1/2"C	DIV 15	.
CWP–1	DPB–5	3#12,1#12G – 1/2"C	30/3/1/25AF	.
CWP–2	DPB–5	3#12,1#12G – 1/2"C	30/3/1/25AF	.
EF–1	DPB–16	3#6, 1#10G – 3/4"C	100/3/1–NEMA 3	.
.	.	.	.	.

NOTES

.

Lilly Young & Associates, Inc.
4275 SHACKLEFORD ROAD
SUITE 130
NORCROSS, GEORGIA 30093
(T)678.533.0300
(F)678.533.0301

THIS DRAWING IS THE PROPERTY OF LILLY YOUNG & ASSOCIATES INC AND IS NOT TO BE REPRODUCED IN WHOLE OR IN PART. IT IS NOT TO BE USED ON ANY OTHER PROJECT AND SHALL BE RETURNED UPON REQUEST. COPYRIGHT AS DATED LILLY YOUNG & ASSOCIATES INC. NOT VALID UNLESS SIGNED AND SEALED.

Print Record

GEORGIA REGISTERED PROFESSIONAL ENGINEER JAMES J. LILLY 11-12-10

COBB COUNTY ADMINISTRATION BUILDING
HVAC RENOVATIONS
10 EAST PARK SQUARE
MARIETTA, GEORGIA

COBB COUNTY PROPERTY MANAGEMENT DEPARTMENT

Revisions

Date 11AUG2010

Project No. 101012LY

Sheet Title
PENTHOUSE - BASIS OF DESIGN PHASE 1

Sheet No.
E1.02A

Released for Construction

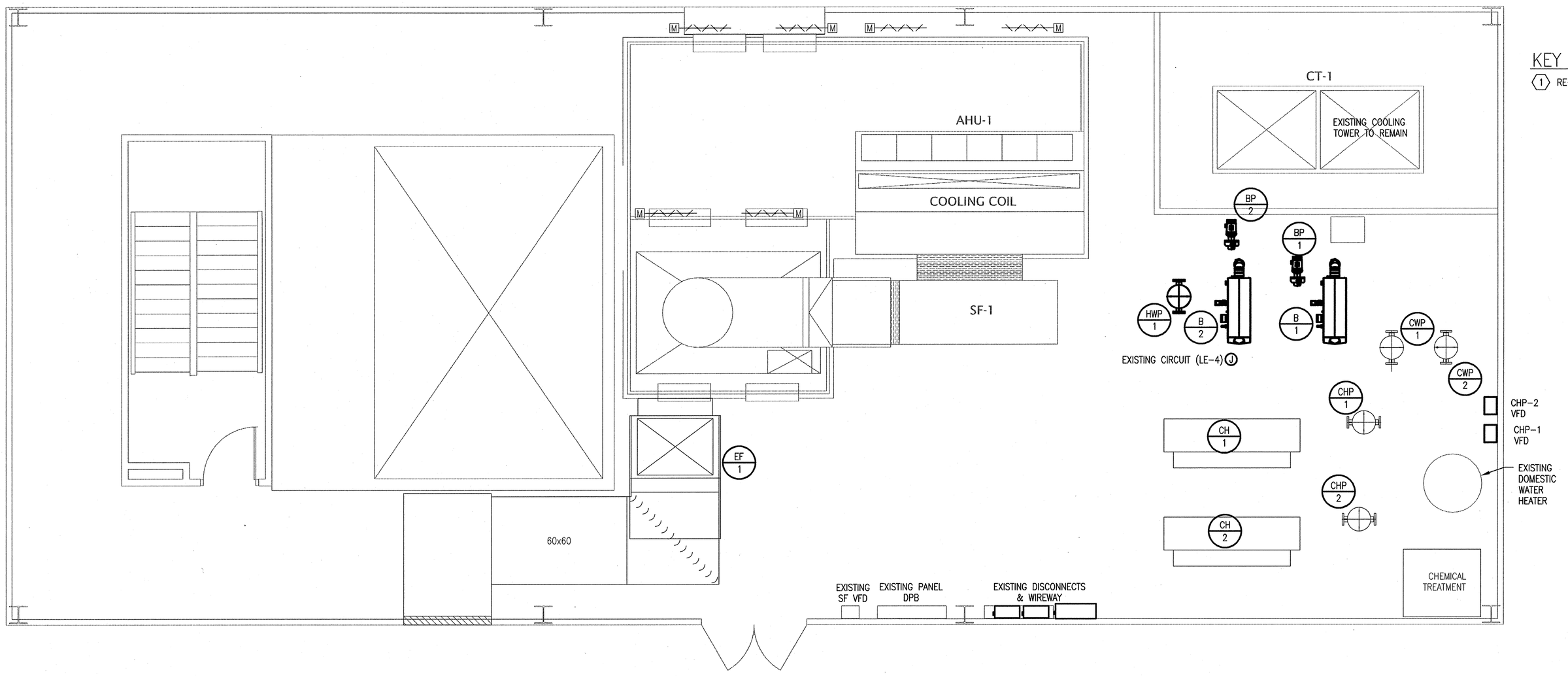

KEY NOTES:

1. RE-CONNECT TO 200A DISCONNECT AT WIREWAY.

E1.02B PENTHOUSE– BASIS OF DESIGN–PHASE 2

SCALE: 1/4" = 1'–0"

NORTH

MECHANICAL EQUIPMENT CONNECTION SCHEDULE

DESCRIPTION	CIRCUIT	CONDUCTORS	STARTER/ DISCONNECT	NOTES
B–1	EXISTING	2#12, 1#12G – 1/2"C	DIV 15	.
B–2	EXISTING	2#12, 1#12G – 1/2"C	DIV 15	.
BP–1	DPB–32	3#12, 1#12G – 1/2"C	30/3/1	.
BP–2	DPB–32	3#12, 1#12G – 1/2"C	30/3/1	.
HWP–1	DPB–10	3#12, 1#12G – 1/2"C	30/3/1	.
.	.	.	.	.
.	.	.	.	.
.	.	.	.	.

NOTES

.

Lilly Young & Associates, Inc.
4275 SHACKLEFORD ROAD
SUITE 130
NORCROSS, GEORGIA 30093
(T)678.533.0300
(F)678.533.0301

THIS DRAWING IS THE PROPERTY OF LILLY YOUNG & ASSOCIATES INC AND IS NOT TO BE REPRODUCED IN WHOLE OR IN PART. IT IS NOT TO BE USED ON ANY OTHER PROJECT AND SHALL BE RETURNED UPON REQUEST. COPYRIGHT AS DATED LILLY YOUNG & ASSOCIATES INC. NOT VALID UNLESS SIGNED AND SEALED.

Print Record

GEORGIA REGISTERED PROFESSIONAL ENGINEER
8-11-2010

COBB COUNTY ADMINISTRATION BUILDING
HVAC RENOVATIONS
10 EAST PARK SQUARE
MARIETTA, GEORGIA

COBB COUNTY PROPERTY MANAGEMENT DEPARTMENT

Revisions

Date 11AUG2010
Project No. 101012LY

Sheet Title
PENTHOUSE - BASIS OF DESIGN PHASE 2

Sheet No.
E1.02B

Released for Construction

HVAC GENERAL NOTES

GENERAL:

1. SPECIFIED MANUFACTURERS INDICATED ON DRAWINGS DO NOT IMPLY THEY MEET THE REQUIREMENTS OF ARRA, INCLUDING BUY AMERICAN. IT IS THE RESPONSIBILITY OF THE CONTRACTOR TO VERIFY AND DOCUMENT THAT ALL PRODUCTS MEET ARRA REQUIREMENTS.
2. ALL MECHANICAL EQUIPMENT AND INSTALLATIONS SHALL CONFORM WITH THE REQUIREMENTS OF THE 2006 INTERNATIONAL MECHANICAL CODE, THE 2006INTERNATIONAL BUILDING CODE, THE 2006 INTERNATIONAL ENERGY CODE, STATE AMENDMENTS, NFPA 90A, 101, UNDERWRITERS LABORATORIES (OR ETL) AND ALL APPLICABLE LOCAL CODES AND ORDINANCES.
3. PRIOR TO PURCHASING ANY MATERIALS OR STARTING ANY WORK, CONTRACTOR SHALL FIELD VERIFY ALL EXISTING CONDITIONS, DUCTWORK SIZES AND LOCATIONS, EQUIPMENT, ETC. SHOWN ON THE DRAWINGS OR AFFECTING THIS WORK AND SHALL REPORT ANY DEVIATIONS TO THE ARCHITECT.
4. SHOP DRAWINGS SHALL BE SUBMITTED TO AND APPROVED BY THE ARCHITECT PRIOR TO ORDERING, PURCHASING, OR FABRICATING ANY MECHANICAL EQUIPMENT. SHOP DRAWINGS SHALL INCLUDE: ALL EQUIPMENT SCHEDULED OR SPECIFIED ON THE DRAWINGS; DUCTWORK DRAWN TO 1/4" SCALE OR THE SCALE SHOWN ON THE DRAWINGS; REFRIGERANT PIPING AND CONTROL WIRING SCHEMATICS CERTIFIED BY THE AIR CONDITIONING EQUIPMENT MANUFACTURER. FAILURE TO SUBMIT REFRIGERANT PIPING DRAWINGS SHALL BE CAUSE FOR REJECTION OF THE ENTIRE SUBMITTAL. LONG LINE REFRIGERANT PIPING APPLICATIONS SHALL BE IN ACCORDANCE WITH THE MANUFACTURER'S CURRENT SPLIT SYSTEM LONG-LINE APPLICATION GUIDELINE.
5. ALL MECHANICAL EQUIPMENT SHALL BE INSTALLED ACCORDING TO MANUFACTURER'S RECOMMENDATIONS.
6. ALL MECHANICAL EQUIPMENT AND SYSTEMS SHALL BE GUARANTEED FOR A PERIOD OF ONE YEAR AFTER ACCEPTANCE BY OWNER.
7. ALL HVAC COMPRESSORS SHALL HAVE EXTENDED 4_YEAR MANUFACTURER'S WARRANTY FOR A 5-YEAR TOTAL WARRANTY.
8. MOUNT TOP OF SENSORS 4'_0" AFF UNLESS NOTED OTHERWISE.
9. UNLESS OTHERWISE NOTED, ALL EXISTING EQUIPMENT, DUCTWORK, DIFFUSERS, ETC. SHOWN AS BEING REMOVED AS PART OF THIS CONTRACT SHALL BECOME THE PROPERTY OF THE HVAC CONTRACTOR AND SHALL BE REMOVED FROM THE PROJECT SITE PRIOR TO PROJECT COMPLETION.
10. ALL WORK SHALL BE COORDINATED AND PERFORMED WITH PRIOR APPROVAL FROM THE OWNER TO SUIT HIS OPERATING CONDITIONS. WORK IN HAZARDOUS (PLANT) AREAS SHALL BE PERFORMED IN ACCORDANCE WITH THE OWNER'S REQUIREMENTS.
11. ANY EXISTING WALL, FLOOR, OR CEILING SURFACE THAT IS DISTURBED DURING THE COURSE OF THE HVAC WORK SHALL BE REPAIRED TO MATCH NEW AND/OR EXISTING CONDITIONS.
12. AFTER CONSTRUCTION, THE ENTIRE HVAC SYSTEM SHALL BE TESTED, ADJUSTED, AND BALANCED TO DELIVER THE AIR AND WATER QUANTITIES SHOWN ON THE DRAWINGS. SUBMIT CERTIFIED (AABC OR NEBB) TEST AND BALANCE REPORT TO THE ARCHITECT FOR APPROVAL.
13. CONTRACTOR SHALL COORDINATE THE INSTALLATION OF ALL MECHANICAL EQUIPMENT, DUCTWORK, PIPING, ETC. TO FIT WITHIN THE SPACE ALLOWED BY THE ARCHITECTURAL AND STRUCTURAL CONDITIONS. CUTTING OR OTHERWISE ALTERING ANY STRUCTURAL MEMBERS SHALL NOT BE PERMITTED WITHOUT WRITTEN PERMISSION FROM THE ARCHITECT.
14. ALL PIPE AND DUCT PENETRATIONS OF FIRE AND/OR SMOKE-RATED ASSEMBLIES SHALL BE FIRE-STOPPED AS REQUIRED TO RESTORE THE ASSEMBLY TO ITS ORIGINAL INTEGRITY. FIRE BARRIER PRODUCTS SHALL BE AS MANUFACTURED BY TREMCO, HILTI, 3M OR APPROVED EQUAL.
15. MANUAL OVER-RIDE CONTROL (EMERGENCY SHUT-DOWN) SWITCHES FOR ALL HVAC UNITS SHALL BE LOCATED IN LOCKING COVER ADJACENT TO FIRE ALARM ANNUNCIATOR PANEL OR OTHER LOCATION APPROVED BY LOCAL AUTHORITY HAVING JURISDICTION AND PER NFPA 92A.
16. ALL MECHANICAL EQUIPMENT SHALL BE LABELED WITH A SEMI-RIGID PLASTIC LAMINATE NAMEPLATE WITH 2" HIGH WHITE LETTERS ON A BLACK BACKGROUND SECURELY AFFIXED TO THE EQUIPMENT. THE NAMEPLATE SHALL SHOW THE EQUIPMENT TAG USED ON THESE DRAWINGS. ON RESIDENTIAL PROJECTS, THE NAMEPLATE ON THE OUTDOOR EQUIPMENT SHALL INDICATE THE APARTMENT OR CONDOMINIUM UNIT NUMBER IT SERVES AS WELL AS THE EQUIPMENT ID TAG.

MECHANICAL/ELECTRICAL COORDINATION:

1. CONTRACTOR SHALL COORDINATE ELECTRICAL CHARACTERISTICS AND REQUIREMENTS OF ALL MECHANICAL EQUIPMENT WITH ELECTRICAL DRAWINGS PRIOR TO ORDERING EQUIPMENT OR SUBMITTING SHOP DRAWINGS, AND SHALL FURNISH EQUIPMENT WIRED FOR THE VOLTAGES SHOWN THEREIN. SHOP DRAWING SUBMITTALS SHALL CLEARLY STATE THAT THE ELECTRICAL CHARACTERISTICS OF ALL EQUIPMENT HAS BEEN COORDINATED WITH THE ELECTRICAL CONTRACT DOCUMENTS AND THE ELECTRICAL CONTRACTOR.
2. ALL MECHANICAL EQUIPMENT REQUIRING ELECTRICAL POWER SHALL BE INSTALLED WITH DISCONNECT SWITCHES AT EACH PIECE OF EQUIPMENT. COORDINATE SWITCH TYPE (FUSED OR NON-FUSED) WITH EQUIPMENT CHARACTERISTICS, MANUFACTURER'S RECOMMENDATIONS AND THE ELECTRICAL DRAWINGS.
3. ALL REQUIRED CONTROL WIRING (INCLUDING POWER WIRING REQUIRED FOR CONTROL PANELS, DEVICES, ETC.) NOT SHOWN ON THE ELECTRICAL DRAWINGS SHALL BE INCLUDED AS PART OF THE MECHANICAL WORK. WIRING IN HVAC PLENUM SPACES SHALL BE INSTALLED ACCORDING TO CODE REQUIREMENTS.
4. UNLESS NOTED OTHERWISE, TRANSFORMERS, CONTROLS AND CONTROL WIRING REQUIRED FOR ALL MECHANICAL SYSTEMS SHALL BE FURNISHED WITH THE EQUIPMENT IT SERVES AND INSTALLED BY THE MECHANICAL CONTRACTOR. MOTOR STARTERS FOR HVAC EQUIPMENT SHALL BE FURNISHED WITH THE MOTOR OR APPARATUS WHICH IT OPERATES. MOTOR STARTER INSTALLATION SHALL BE BY THE DIVISION 16 CONTRACTOR.

AIR DISTRIBUTION:

1. SUPPLY, RETURN AND O.A. DUCTWORK SHALL BE CONSTRUCTED OF GALVANIZED SHEETMETAL IN ACCORDANCE WITH SMACNA DUCT CONSTRUCTION STANDARDS, LATEST EDITION. ALL JOINTS AND SEAMS IN ALL SHEETMETAL DUCTWORK SHALL BE SEALED WITH DUCT SEALER.
2. EXTERIOR SUPPLY AND RETURN DUCTWORK SHALL BE CONSTRUCTED OF GALVANIZED SHEETMETAL WITH ALL SEAMS CAULKED AND SEALED WEATHERTIGHT.
3. ALL OPEN ENDED DUCTS AND FAN OUTLETS SHALL HAVE 1/2" X 1/2" HARDWARE CLOTH AFFIXED TO THE OPENING.
4. EXHAUST DUCTWORK SHALL BE GALVANIZED SHEET METAL CONSTRUCTED TO SMACNA STANDARDS AND SHALL NOT BE INSULATED UNLESS NOTED OTHERWISE.
5. ALL DUCTWORK SHALL BE SUPPORTED BY THE BUILDING STRUCTURE AND SHALL NOT REST ON CEILING TILES OR CEILING STRUCTURE. DUCT SUPPORTS AND ATTACHMENT TO STRUCTURE SHALL BE PER SMACNA STANDARDS.
6. TAPE, BED AND SEAL AIR TIGHT ALL PENETRATIONS FROM RETURN AIR PLENUMS TO NON RETURN AIR PLENUMS THAT ARE REQUIRED DUE TO DUCTWORK, PIPING OR OTHER ITEMS.
7. DUCTWORK DIMENSIONS SHOWN ON THE DRAWINGS ARE INSIDE CLEAR DIMENSIONS.
8. EXTERNAL STATIC PRESSURE (ESP) DOES NOT INCLUDE COIL, CASING OR FILTER PRESSURE DROP.

INSULATION:

1. PIPE INSULATION:
   a. INSULATE ALL CHILLED WATER SUPPLY (CHWS), CHILLED WATER RETURN (CHWR), STEAM (STM), AND CONDENSATE RETURN (CR) PIPING WITH FIBERGLASS PIPE INSULATION WITH VAPOR BARRIER JACKET, JOHNS MANVILLE MICRO-LOK OR APPROVED EQUAL, AND FORMED FITTING COVERS BY PROTO PVC CORPORATION. SEE SPECIFICATIONS FOR INSULATION THICKNESSES. ALL EXPOSED INSULATED PIPING BELOW 10'_0" AFF SHALL BE PROTECTED BY A CORRUGATED ALUMINUM JACKET WITH BANDS 3'_0" O.C. INSULATE ALL EXTERIOR COOLING WATER PIPING WITH 1½" CELLULAR GLASS INSULATION OVER ELECTRIC HEAT TRACING. COVER WITH VAPOR BARRIER AND A CORRUGATED ALUMINUM JACKET WITH BANDS 3'_0" O.C. AND FORMED FITTING COVERS BY PROTO PVC CORPORATION.

GAS FLUES (U.L. LISTED):

1. FOR ALL CATEGORY III (FORCED DRAFT) APPLIANCES: SELKIRK METALBESTOS TYPE PS.
2. ALL CATEGORY II AND IV APPLIANCES: "SAF-T-VENT" BY HEAT FAB, INC.
3. TERMINATE ALL GAS FLUE PIPING THRU ROOF WITH TALL CONE FLASHING, STORM COLLAR, AND WEATHER CAP.

PIPING:

1. REFRIGERANT PIPING SHALL BE TYPE L OR REFRIGERATION SERVICE COPPER TUBING WITH BRAZED JOINTS.
2. REFRIGERANT PIPING CARRYING OTHER THAN GROUP A1 OR B1 REFRIGERANTS AND INTERCONNECTING SEPARATE PIECES OF EQUIPMENT (SPLIT HVAC SYSTEMS) AND PASSING VERTICALLY THROUGH FLOORS FROM ONE STORY TO ANOTHER SHALL BE ENCLOSED IN A CODE APPROVED RIGID AND TIGHT CONTINUOUS FIRE RESISTING PIPE DUCT OR SHAFT HAVING NO OPENINGS INTO FLOORS NOT SERVED BY THE REFRIGERATING SYSTEM, AS REQUIRED BY LOCAL CODE AUTHORITIES. THE PIPE DUCT OR SHAFT SHALL BE VENTED TO OUTDOORS.
3. PROVIDE MANUAL AIR VENT (WITH DRAIN) AT HIGH POINTS OF ALL RECIRCULATING WATER PIPING SYSTEMS.
4. PIPING AT PUMPS AND EQUIPMENT SHALL BE SUPPORTED SO THAT NO PIPING OR ACCESSORY LOAD IS CARRIED BY THE PUMP OR EQUIPMENT.
5. ALL PIPING ABOVE GRADE SHALL BE SUPPORTED BY THE BUILDING STRUCTURE AND SHALL NOT REST ON CEILING TILES OR CEILING STRUCTURE. PIPING HUNG FROM JOISTS SHALL BE HUNG FROM THE TOP CHORDS OF THE JOISTS.
6. WHERE MAXIMUM OPERATING PRESSURE IS GREATER THAN 150 PSIG IN ANY SYSTEM, CONTRACTOR SHALL FURNISH AND INSTALL PRODUCTS, PIPING, VALVES, FITTINGS, AND ACCESSORIES WITH PRESSURE CLASSIFICATIONS THAT ARE SUITABLE FOR SERVICE. IN GENERAL, ALL PRODUCTS, PIPING, VALVES, FITTINGS, AND ACCESSORIES BELOW 350 FEET OF THE HIGHEST PIPING POINT MUST HAVE PRESSURE RATINGS OF 300 PSI W.O.G. OR GREATER. ALL PRODUCTS, PIPING, VALVES, FITTINGS, AND ACCESSORIES BELOW 575 FEET OF THE HIGHEST PIPING POINT MUST HAVE PRESSURE RATINGS OF 500 PSI W.O.G. OR GREATER.
7. EXPANSION IN PIPING SYSTEMS SHALL BE COMPENSATED FOR BY THE USE OF U-BENDS, Z-BENDS OR EXPANSION JOINTS AS INDICATED. U-BENDS (LOOPS) AND Z-BENDS SHALL BE COMPLETE WITH PIPE GUIDES AND ANCHORS.

WATER COOLED CHILLER

TAG	MODEL No.	NOMINAL (TONS)	MAX. (KW/TON)	APLV	CHILLED WATER EWT (DEG- F.)	CHILLED WATER LWT (DEG - F.)	CHILLED WATER GPM	CHILLED WATER PRESS DROP (FT)	CONDENSER WATER EWT (DEG- F.)	CONDENSER WATER LWT (DEG - F.)	CONDENSER WATER GPM	CONDENSER WATER PRESS DROP (FT)	ACCESSORIES
CH1,2	30HXC86	86	0.727	0.482	54	44	210	17.2	85	95	300	10.7	1-5
	-	-	-	-	-	-	-	-	-	-	-	-	-
-	-	-	-	-	-	-	-	-	-	-	-	-	-

NOTES & ACCESSORIES:
1. ARMAFLEX INSULATION ON COOLER PAINTED TO MATCH CHILLER.
2. UNIT MOUNTED VARIABLE SPEED DRIVE.
3. DDC COMMUNICATIONS.
4. WYE- DELTA STARTER W/CIRCUIT BRAKERS AND NON-FUSE DISCONNECT.
5. R-134A

SELECTIONS BASED ON PRODUCTS BY CARRIER .
EQUAL PRODUCTS BY TRANE, YORK, CLIMACOOL

WATER COOLED CHILLER (ADD ALTERNATE)

TAG	MODEL No.	NOMINAL (TONS)	MAX. (KW/TON)	APLV	CHILLED WATER EWT (DEG- F.)	CHILLED WATER LWT (DEG - F.)	CHILLED WATER GPM	CHILLED WATER PRESS DROP (FT)	CONDENSER WATER EWT (DEG- F.)	CONDENSER WATER LWT (DEG - F.)	CONDENSER WATER GPM	CONDENSER WATER PRESS DROP (FT)	ACCESSORIES
CH1,2	MS90FS	90	0.674	0.311	54	44	214	10.16	85	95	254	9.1	1-5
-	-	-	-	-	-	-	-	-	-	-	-	-	-

NOTES & ACCESSORIES:
1. ARMAFLEX INSULATION ON COOLER PAINTED TO MATCH CHILLER.
2. UNIT MOUNTED VARIABLE SPEED DRIVE.
3. DDC COMMUNICATIONS.
4. WYE- DELTA STARTER W/CIRCUIT BRAKERS AND NON-FUSE DISCONNECT.
5. R-134A
6. FRICTIONLESS COMPRESSORS

SELECTIONS BASED ON PRODUCTS BY MULTISTACK .
EQUAL PRODUCTS BY

NOTE: THIS IS ADD ALTERNATE IN PLACE OF THE TWO (2) SCREW CHILLERS. PUMPS AND LAYOUT WOULD BE SIMILAR

DDC CONTROL SYSTEM: PROVIDE NEW BUILDING AUTOMATION SYSTEM (BAS) MODEL APOGEE AS MANUFACTURED BY SIEMENS. BAS SHALL INCLUDE ALL DDC EQUIPMENT AND HAVE FUTURE CAPACITY FOR TERMINAL UNITS AND OTHER END DEVICES WHEN UPGRADED TO DDC. SEE SPECIFICATIONS FOR DETAILS.

PUMPS

TAG	MODEL No.	PUMP TYPE	FLUID	FLOW RATE (GPM)	HEAD (FT. WATER)	MINIMUM EFFICIENCY (%)	RPM	MOTOR HP	MIN. PUMP PRESSURE RATING (PSI)	SEAL TYPE	ACCESSORIES
BP-1,2	SERIES 60	IN-LINE	WATER	74	33	70%	1750	1.0	125	Carbon Ceramic	1,3,5
HWP-1	SERIES 90	IN-LINE	WATER	135	75	70%	1750	7.5	125	Carbon Ceramic	1,3,5
CHP-1	SERIES 90	IN-LINE	WATER	210	60	70%	1750	7.5	125	Carbon Ceramic	1,3,6
CHP-2	SERIES 90	IN-LINE	WATER	210	60	70%	1750	7.5	125	Carbon Ceramic	1,3,6
CWP-1	SERIES 90	IN-LINE	WATER	256	80	70%	1750	10.0	125	Carbon Ceramic	1,3,5
CWP-2	SERIES 90	IN-LINE	WATER	256	80	70%	1750	10.0	125	Carbon Ceramic	1,3,5

NOTES:
A. FOR PUMPS LARGER THAN 10 HP, IMPELLERS SHALL BE TRIMMED DURING TESTING AND BALANCING TO MEET SPECIFIED FLOW BASED ON ACTUAL SYSTEM PRESSURE.

ACCESSORIES:
1. MOUNT PER DETAIL
2. PROVIDE INERTIA BASE WITH SPRING ISOLATORS. MOUNT TO CONCRETE BASE.
3. FLEXIBLE COUPLED.
4. CLOSE COUPLED.
5. DISCONNECT SWITCH BY DIV. 16
6. VARIABLE SPEED DRIVE BY DIV 15

Abbreviations:
HWP: Hot Water Pump
CWP: Chilled Water Pump
CHP: Chilled Water Pump

SELECTIONS ARE BASED ON PRODUCTS BY:_BELL & GOSSETT.
EQUAL PRODUCTS: TACO, PACO, PATTERSON, ARMSTRONG

FANS

TAG	MODEL	DUTY	CFM	ESP	MOTOR SIZE	RPM	DRIVE	WEIGHT (Lb)	ACCESSORIES
EF-1	BISW-21	BUILDING EXHAUST (ECONOMIZER)	54,000	1.0	40	850	BELT	3,000	1-4
-	-	-	-	-	-	-	-	-	-

ACCESSORIES:
1. GRAVITY BACKDRAFT DAMPER
2. INTERLOCK WITH MOTORIZED DAMPER/LOUVER
3. COMBINATION MORTOR STARTER DISCONNECT BY DIV. 16
4. MOTOR SIDE GUARD

SELECTIONS ARE BASED ON PRODUCTS BY: GREENHECK
EQUAL PRODUCTS: PENN, CARNES, COOK

BOILERS (HIGH EFFICIENCY)

TAG	MODEL No.	FUEL	INPUT MBH	OUTPUT MBH	GPM	WATER TEMP RISE	WATER PRESS DROP FT.	WATER TEMP SET TEMP.	ACCESSORIES
B-1, 2	KNIGHT KB801	NAT GAS	800	752	74	20	33	180	-
-	-	-	-	-	-	-	-	-	-
-	-	-	-	-	-	-	-	-	-

ACCESSORIES:
1. MODULATED GAS VALVE (120-240 DEGREES F.)
2. COMBINATION GAS VALVE/PRESSURE REGULATOR
3. 100% PILOT SAFETY SHUT-OFF
4. COMBUSTIBLE FLOOR SHIELD.
5. DRAFT DIVERTER
6. AUTO HI-LIMIT CONTROL
7. ESME STAMPED 125 PSIG.
8. 60 PSIG PRESSURE RELIEF VALVE
9. ELECTRONIC INTERMITTENT PILOT IGNITION

SELECTIONS BASED ON PRODUCTS BY . LOCHINVAR
EQUAL PRODUCTS BY_ TELEDYNE LAARS, PEERLESS

EXPANSION TANK

TAG	MODEL No.	TANK VOLUME (GALLONS)	ACCEPTANCE VOLUME (GALLONS)	ARRANGEMENT	TANK CHARGE (PSI)	PRESSURE RELIEF VALVE SETTING (PSIG)	DUTY	ACCESSORIES
ET-1	SERIES D	5	2.5	VERTICAL	-	-	CHILLED WATER	-
ET-2	SERIES D	50	40	-	-	-	HOT WATER	-
-	-	-	-	-	-	-	-	-

SELECTIONS BASED ON PRODUCTS BY B&G.
EQUAL PRODUCTS BY _TACO, AMTROL

Lilly Young & Associates, Inc.
4275 SHACKLEFORD ROAD
SUITE 130
NORCROSS, GEORGIA 30093
(T)678.533.0300
(F)678.533.0301

THIS DRAWING IS THE PROPERTY OF LILLY YOUNG & ASSOCIATES INC AND IS NOT TO BE REPRODUCED IN WHOLE OR IN PART. IT IS NOT TO BE USED ON ANY OTHER PROJECT AND SHALL BE RETURNED UPON REQUEST. COPYRIGHT AS DATED LILLY YOUNG & ASSOCATES INC. NOT VALID UNLESS SIGNED AND SEALED.

Print Record

GEORGIA REGISTERED No. 31783 PROFESSIONAL ENGINEER REGINA M. YOUNG
8-11-10

COBB COUNTY ADMINISTRATION BUILDING
HVAC RENOVATIONS
10 EAST PARK SQUARE
MARIETTA, GEORGIA

COBB COUNTY PROPERTY MANAGEMENT DEPARTMENT

Revisions

Date 11AUG2010
Project No. 101012LY

Sheet Title
SCHEDULES & NOTES

Sheet No.
M001

Released for Construction

HVAC FLOW DIAGRAM LEGEND

SYMBOL	DESCRIPTION	ABBREVIATIONS
CHWS	CHILLED WATER SUPPLY	CHWS
CHWR	CHILLED WATER RETURN	CHWR
CWS	CONDENSER WATER SUPPLY	CWS
CWR	CONDENSER WATER RETURN	CWR
VFD	VARIABLE FREQUENCY DRIVE	---
DP	DIFFERENTIAL PRESSURE SENSOR	---
BTUH	BTU METER	---
	FLOOR DRAIN	---
M	3-WAY MODULATING CONTROL VALVE	---
M	2-WAY MODULATING CONTROL VALVE	---
	GATE VALVE	---
	GLOBE VALVE	---
	ANGLE GATE VALVE	---
	THREE WAY VALVE	---
	CONTROL VALVE	---
	SWING CHECK VALVE	---
	NON SLAM (LIFT) CHECK VALVE	---
	TRIPLE DUTY VALVE	---
SD	SUCTION DIFFUSER	---
	BUTTERFLY VALVE	---
	BALANCING VALVE (CIRCUIT SETTER)	---
	BALL VALVE	---
	AUTOMATIC FLOW CONTROL VALVE	---
	RELIEF VALVE	---
	MANUAL AIR VENT	MAV
	HOSE END DRAIN VALVE	---
	COMBINATION TEMP/PRESSURE TEST PORT (PETE'S PLUG)	---
S	SOLENOID VALVE	---
	UNION	---
	FLEXIBLE CONNECTOR	---
AS	AIR SEPARATOR	---
	PRESSURE REDUCING VALVE	---
	BLIND FLANGE / CAP	---
	PIPING CONNECTION ON BOTTOM	---
	PIPING CONNECTION ON TOP	---
	ELBOW TURNED DOWN	---
	ELBOW TURNED UP	---
	REDUCER, CONCENTRIC	---
	REDUCER, ECENTRIC	---
	TEE	---
	ANCHOR	---
	ALIGNMENT GUIDE	---
FS	FLOW SWITCH	---
FM	FLOW METER	---
PG	PRESSURE GAUGE	---
PS	PRESSURE SWITCH	---
	PUMP	---
	STRAINER WITH BLOWDOWN	---
	THERMOMETER	---
	GUAGE COCK	---

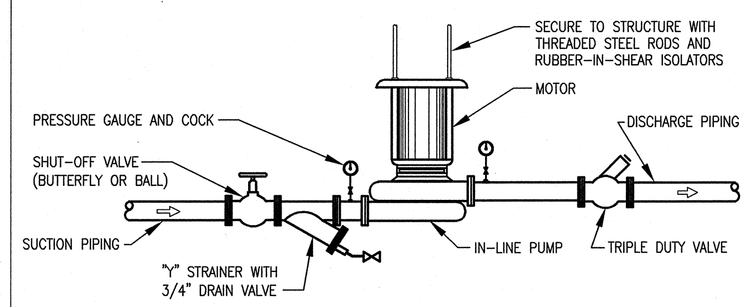

IN-LINE CENTRIFUGAL PUMP DETAIL

NOT TO SCALE

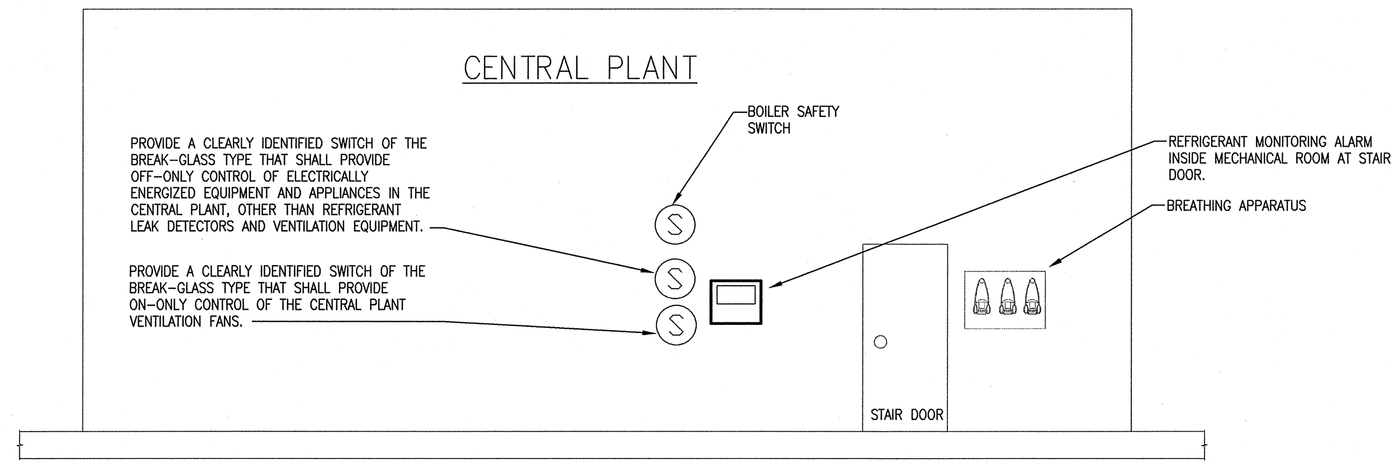

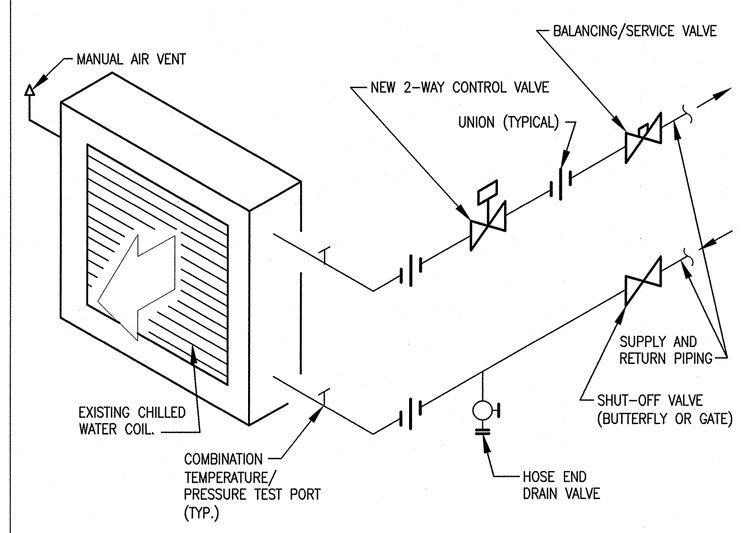

HVAC 2-WAY COIL PIPING DETAIL CHILLED OR HOT WATER

NOT TO SCALE

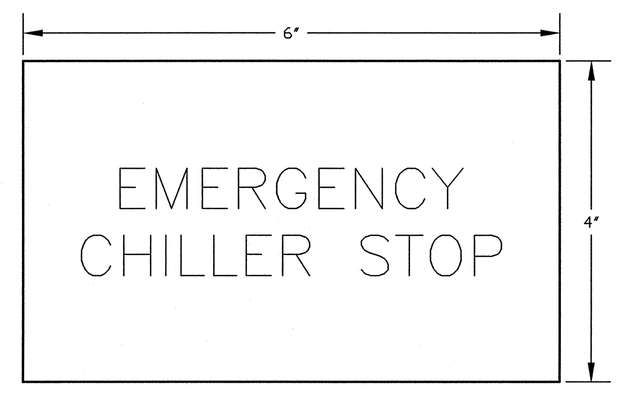

NOTES:

1. SIGN BACKGROUND SHALL BE RED WITH WHITE LETTERS. LETTERS SHALL BE A MINIMUM OF 5/8" TALL. SIGN SHALL BE WALL MOUNTED 6" ABOVE EMERGENCY SHUTDOWN SWITCH.
2. DEVICE SHALL BE THE "GLASS BREAK" TYPE SWITCH OR A RED "GLASS BREAK" STATION BOX MOUNTED OVER A WALL SWITCH. THE SHUTDOWN DEVICE SHALL PROVIDE OFF-ONLY CONTROL OF ALL CHILLERS LOCATED IN THE MACHINE ROOM. PROVIDE SEPARATE CHAIN SECURED GLASS BREAK HAMMER MOUNTED ADJACENT TO THE GLASS BREAK DEVICE IF NOT INTEGRAL WITH THE ASSEMBLY.
3. EMERGENCY SHUTDOWN SWITCH WHICH IS TO BE MOUNTED WITHIN 48"-60" ABOVE FINISHED FLOOR INSIDE THE CHILLER ROOM AT THE EGRESS DOOR. IF MULTIPLE EGRESS DOORS EXIST THEN PROVIDE ONE SHUTDOWN DEVICE AT EACH EGRESS DOOR.

EMERGENCY CHILLER STOP SWITCH SIGN

SCHEMATIC - NO SCALE

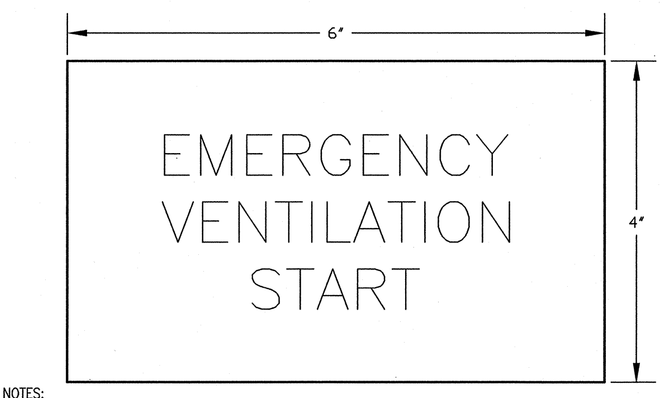

NOTES:

1. SIGN BACKGROUND SHALL BE RED WITH WHITE LETTERS. LETTERS SHALL BE A MINIMUM OF 5/8" TALL. SIGN SHALL BE WALL MOUNTED 6" ABOVE EMERGENCY START SWITCH.
2. DEVICE SHALL BE THE "GLASS BREAK" TYPE SWITCH OR A RED "GLASS BREAK" STATION BOX MOUNTED OVER A WALL SWITCH. THE START DEVICE SHALL PROVIDE ON-ONLY CONTROL OF ALL VENTILATION FANS AND ASSOCIATED MOTOR OPERATED DAMPERS LOCATED IN THE MACHINE ROOM. PROVIDE SEPARATE CHAIN SECURED GLASS BREAK HAMMER MOUNTED ADJACENT TO THE GLASS BREAK DEVICE IF NOT INTEGRAL WITH THE ASSEMBLY.
3. EMERGENCY START SWITCH WHICH IS TO BE MOUNTED WITHIN 48"-60" ABOVE FINISHED FLOOR INSIDE THE CHILLER ROOM AT THE EGRESS DOOR. IF MULTIPLE EGRESS DOORS EXIST THEN PROVIDE ONE START DEVICE AT EACH EGRESS DOOR.

EMERGENCY VENTILATION START SWITCH SIGN

SCHEMATIC - NO SCALE

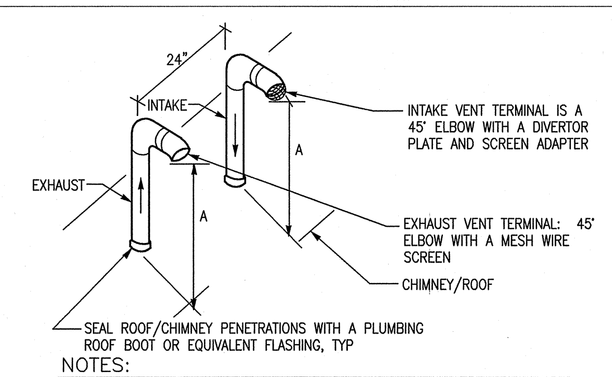

NOTES:

1. EXTEND (DIMENSION A) VENT TERMINALS 12" ABOVE ROOF/CHIMNEY TOP
2. THE INTAKE VENT & EXHAUST VENT TERMINATION MUST BE ORIENTED FACING DOWNWARD AND IN THE SAME ORIENTATION
3. MAINTAIN 16" BETWEEN EXHAUSTS, IF THEY ARE LOCATED ADJACENT TO EACH OTHER
4. EACH BOILER HAS AN INTAKE AND EXHAUST VENT THRU ROOF/CHIMNEY
5. FOLLOW MANUFACTURER'S INSTRUCTIONS FOR INSTALLATION OF VENTS & CONNECTING OF VENTS TO WATER HEATERS. MANUFACTURER'S INSTRUCTIONS SHALL BE FOLLOWED WHERE THERE IS A CONFLICT WITH THIS DETAIL
8. ROUTE INTAKE & EXHAUST UP TO ROOF. PROVIDE MAXIMUM OF 4-90° ELBOWS ON EXHAUST FROM UNIT TO ROOF TERMINATION, AND 4 ELBOWS ON INTAKE FROM UNIT TO ROOF TERMINATION.

BOILER VENTING THROUGH ROOF DETAIL

NOT TO SCALE

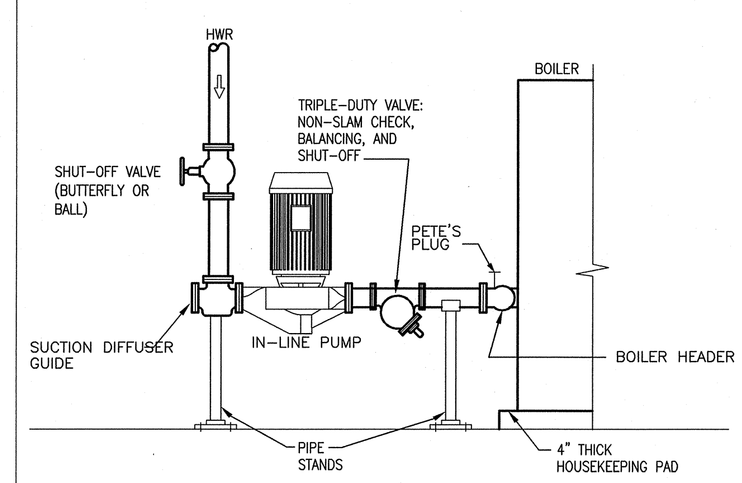

BOILER CIRCULATING PUMP PIPING DETAIL TYPICAL TWO (2) PER BOILER

NOT TO SCALE

Lilly Young & Associates, Inc.
4275 SHACKLEFORD ROAD
SUITE 130
NORCROSS, GEORGIA 30093
(T)678.533.0300
(F)678.533.0301

THIS DRAWING IS THE PROPERTY OF LILLY YOUNG & ASSOCIATES INC AND IS NOT TO BE REPRODUCED IN WHOLE OR IN PART. IT IS NOT TO BE USED ON ANY OTHER PROJECT AND SHALL BE RETURNED UPON REQUEST. COPYRIGHT AS DATED LILLY YOUNG & ASSOCIATES INC. NOT VALID UNLESS SIGNED AND SEALED.

Print Record

GEORGIA REGISTERED No. 31783 PROFESSIONAL ENGINEER REGINA M. YOUNG
8-11-10

COBB COUNTY ADMINISTRATION BUILDING
HVAC RENOVATIONS
10 EAST PARK SQUARE
MARIETTA, GEORGIA

COBB COUNTY PROPERTY MANAGEMENT DEPARTMENT

Revisions

Date 11AUG2010
Project No. 101012LY

Sheet Title
DETAILS

Sheet No.
M002

Released for Construction

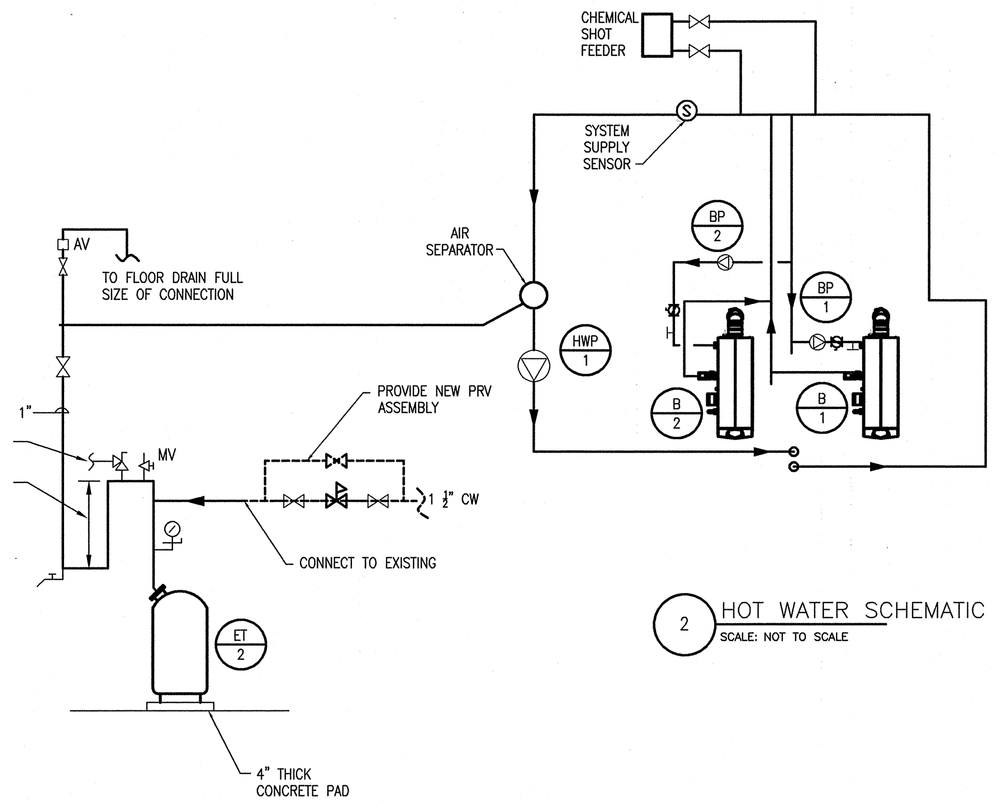

2 HOT WATER SCHEMATIC
SCALE: NOT TO SCALE

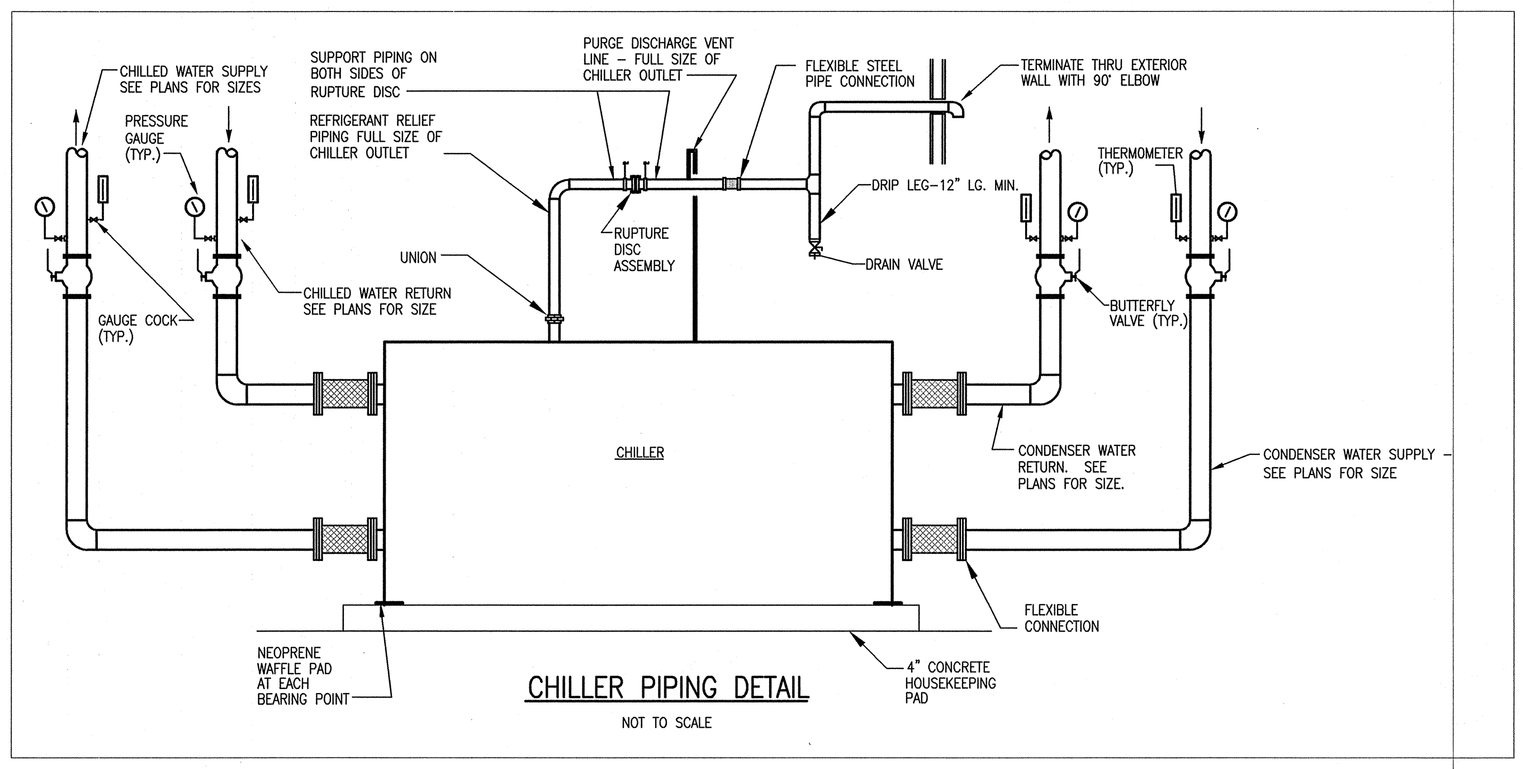

CHILLER PIPING DETAIL
NOT TO SCALE

GENERAL NOTES:

1. PETE'S PLUG (COMBINATION PRESSURE AND THERMOMETER WELL) SHALL BE PROVIDED AT THE INLET AND OUTLET OF OF EACH MAJOR PIECE OF EQUIPMENT IDENTIFIED BY TAG
2. SHOT FEEDERS SHALL BE FIVE GALLON CAPACITY.
3. INSULATE PIPE CONNECTING SHOT FEEDERS TO THE SYSTEM PIPE.
4. MOUNT EXPANSION TANKS AS HIGH AS POSSIBLE.
5. PROVIDE CHILLED WATER PIPING TO CHILLER ACCESSORIES, INCLUDING OIL COOLER AND STARTER, IF REQUIRED BY SPECIFIC CHILLER MANUFACTURER. PIPING SHALL BE SIZED BY MANUFACTURER TO MEET CHILLER'S SPECIFIC REQUIREMENTS.

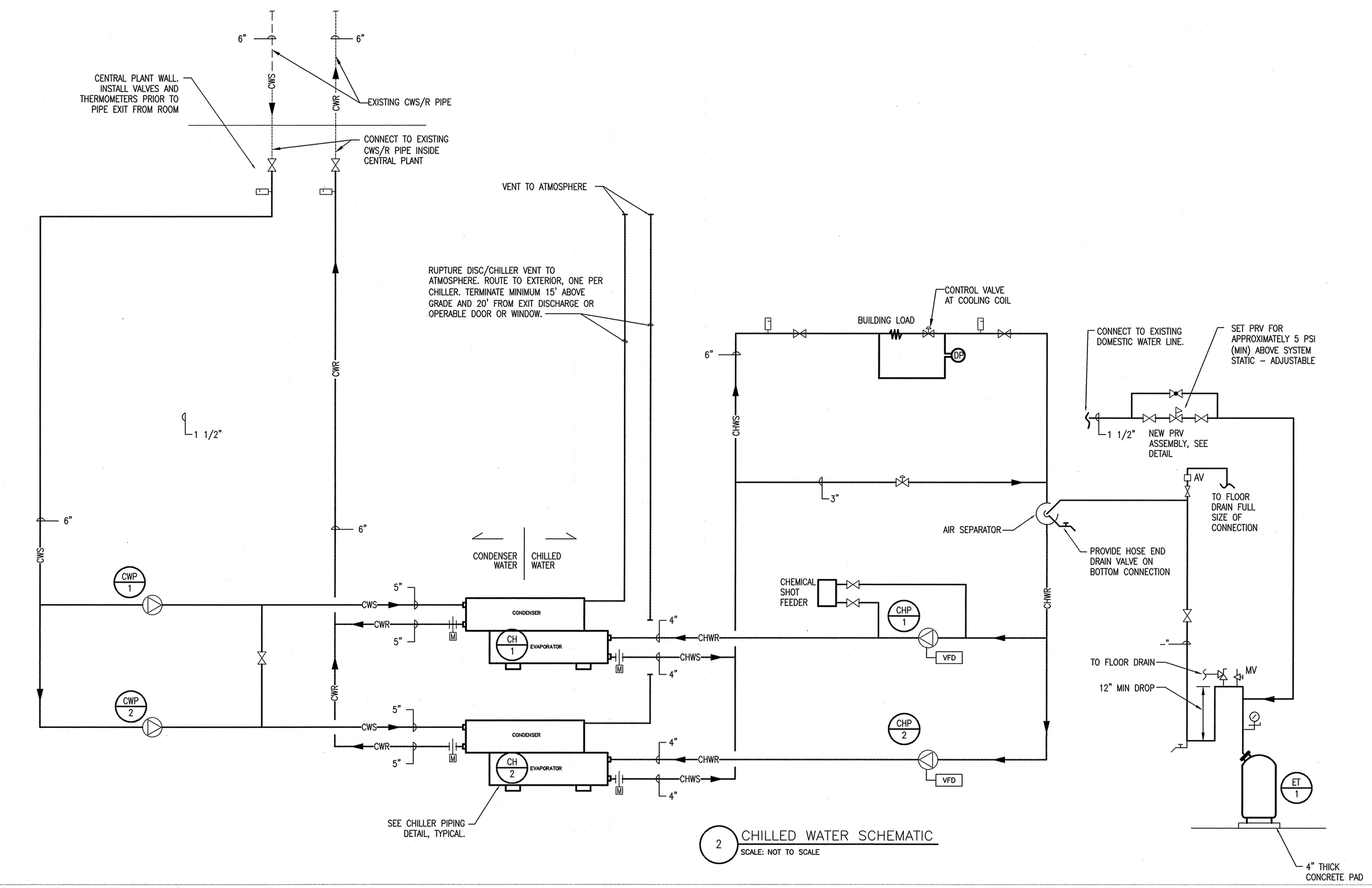

2 CHILLED WATER SCHEMATIC
SCALE: NOT TO SCALE

Lilly Young & Associates, Inc.
4275 SHACKLEFORD ROAD
SUITE 130
NORCROSS, GEORGIA 30093
(T)678.533.0300
(F)678.533.0301

THIS DRAWING IS THE PROPERTY OF LILLY YOUNG & ASSOCIATES INC AND IS NOT TO BE REPRODUCED IN WHOLE OR IN PART. IT IS NOT TO BE USED ON ANY OTHER PROJECT AND SHALL BE RETURNED UPON REQUEST. COPYRIGHT AS DATED LILLY YOUNG & ASSOCIATES INC. NOT VALID UNLESS SIGNED AND SEALED.

Print Record

GEORGIA REGISTERED No. 31783 PROFESSIONAL ENGINEER REGINA M. YOUNG
8-11-10

COBB COUNTY ADMINISTRATION BUILDING
HVAC RENOVATIONS
10 EAST PARK SQUARE
MARIETTA, GEORGIA

COBB COUNTY PROPERTY MANAGEMENT DEPARTMENT

Revisions

Date	Project No.
11AUG2010	101012LY

Sheet Title
SCHEMATICS

Sheet No.
M003

Released for Construction

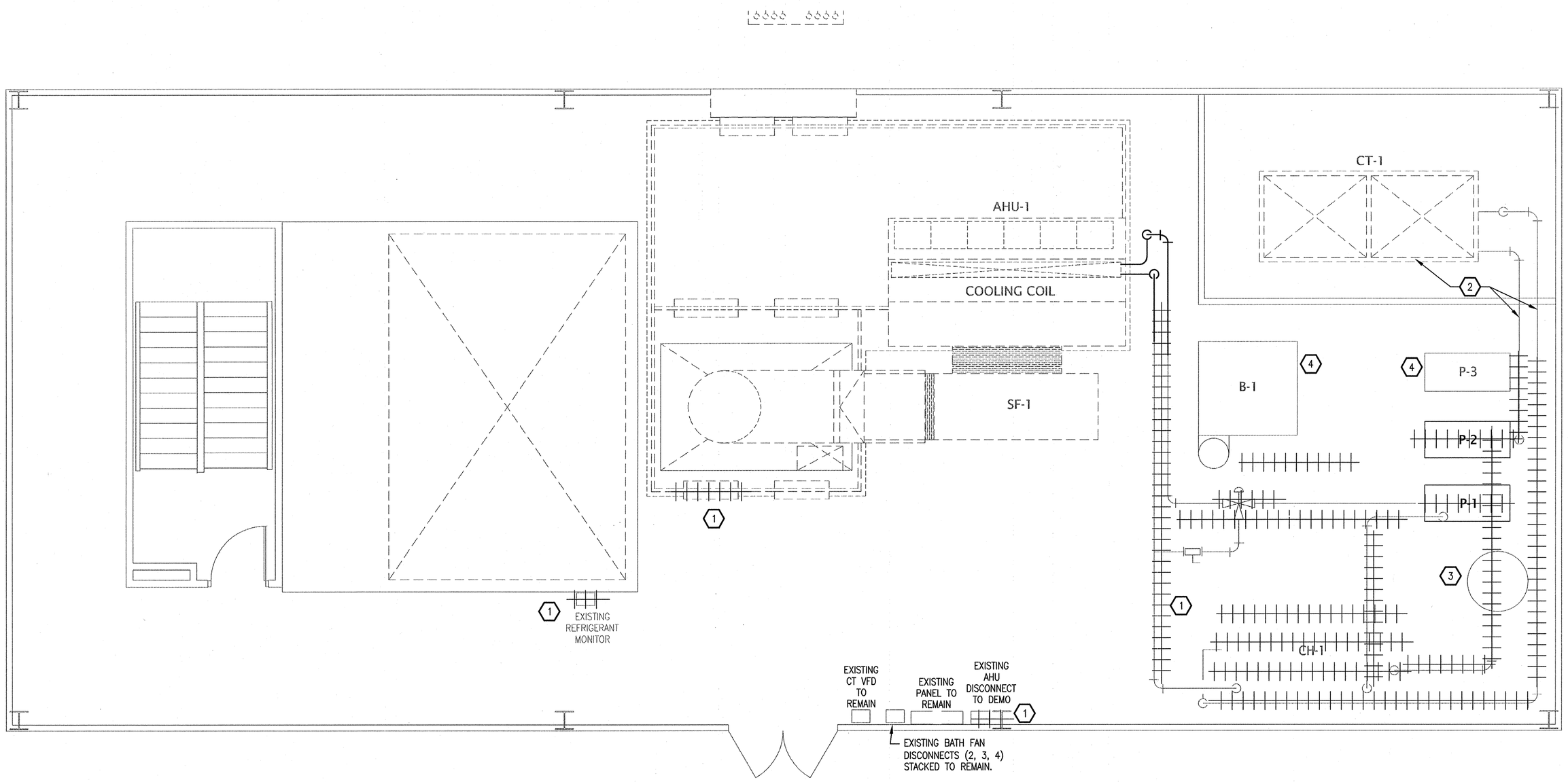

KEY NOTES:

1. DEMO ALL CHILLED AND CONDENSER WATER PIPE, PUMPS, CHILLER AND ACCESSORIES. TYP OF HATCHED AREAS
2. EXISTING COOLING TOWER AND CWS/R PIPE TO REMAIN AS INDICATED.
3. DOMESTIC HOT WATER HEATER TO REMAIN.
4. EXISTING BOILER AND PUMP SHALL REMAIN THIS PHASE.

M1.01A PENTHOUSE– DEMO PLAN–PHASE 1

SCALE: 1/4" = 1'-0"

Lilly Young & Associates, Inc.
4275 SHACKLEFORD ROAD
SUITE 130
NORCROSS, GEORGIA 30093
(T)678.533.0300
(F)678.533.0301

THIS DRAWING IS THE PROPERTY OF LILLY YOUNG & ASSOCIATES INC AND IS NOT TO BE REPRODUCED IN WHOLE OR IN PART. IT IS NOT TO BE USED ON ANY OTHER PROJECT AND SHALL BE RETURNED UPON REQUEST. COPYRIGHT AS DATED LILLY YOUNG & ASSOCIATES INC. NOT VALID UNLESS SIGNED AND SEALED.

Print Record

GEORGIA REGISTERED No. 31783 PROFESSIONAL ENGINEER RESINA M. YOUNG
8-11-10

COBB COUNTY ADMINISTRATION BUILDING
HVAC RENOVATIONS
10 EAST PARK SQUARE
MARIETTA, GEORGIA

COBB COUNTY PROPERTY MANAGEMENT DEPARTMENT

Revisions

Date 11AUG2010
Project No. 101012LY

Sheet Title
PENTHOUSE - EXISTING PHASE 1

Sheet No.
M1.01A

Released for Construction

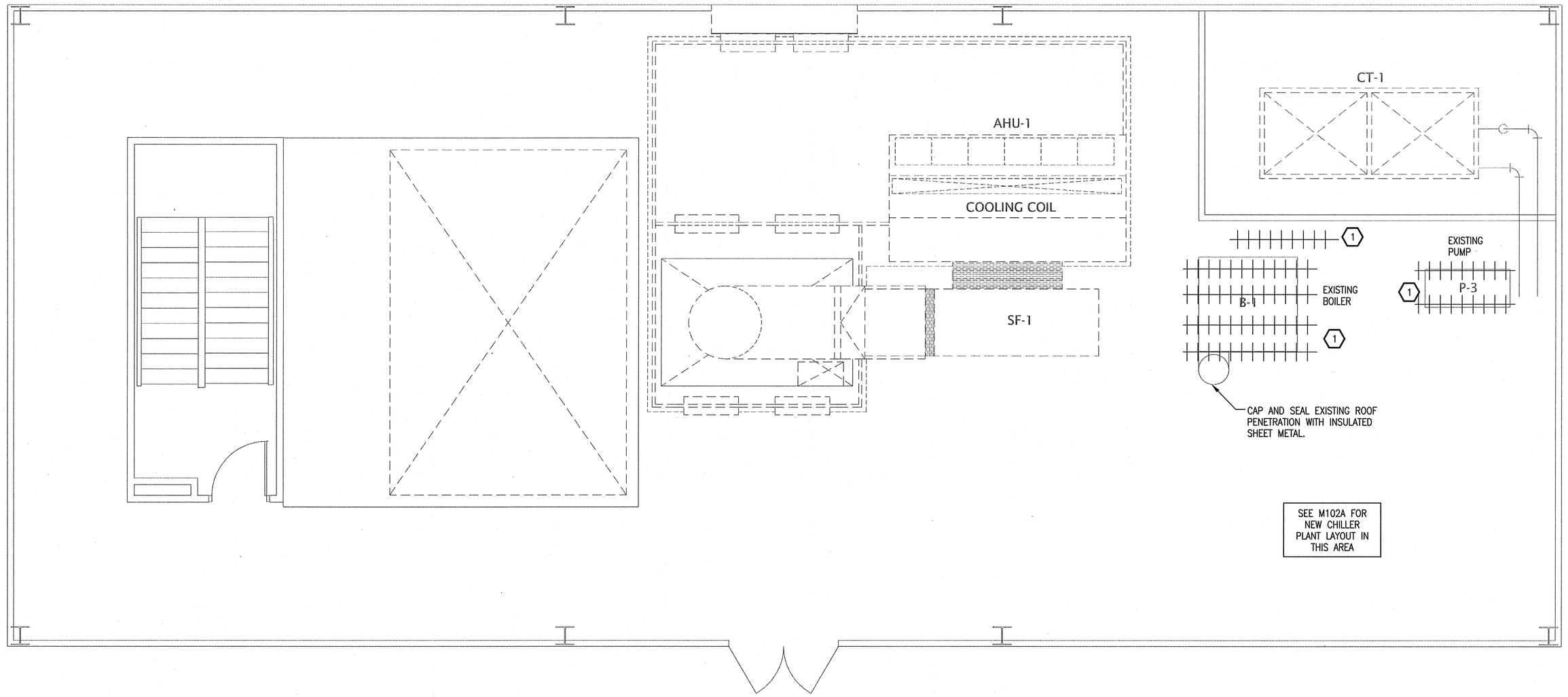

KEY NOTES:

1. DEMO ALL HOT WATER PIPE, BOILER, PUMPS AND ASSOCIATED ACCESSORIES.

M1.01B PENTHOUSE– DEMO PLAN–PHASE 2

SCALE: 1/4" = 1'–0"

Lilly Young & Associates, Inc.
4275 SHACKLEFORD ROAD
SUITE 130
NORCROSS, GEORGIA 30093
(T)678.533.0300
(F)678.533.0301

THIS DRAWING IS THE PROPERTY OF LILLY YOUNG & ASSOCIATES INC AND IS NOT TO BE REPRODUCED IN WHOLE OR IN PART. IT IS NOT TO BE USED ON ANY OTHER PROJECT AND SHALL BE RETURNED UPON REQUEST. COPYRIGHT AS DATED LILLY YOUNG & ASSOCIATES INC. NOT VALID UNLESS SIGNED AND SEALED.

Print Record

GEORGIA REGISTERED No. 31763 PROFESSIONAL ENGINEER VIRGINIA M. YOUNG
8-11-10

COBB COUNTY ADMINISTRATION BUILDING
HVAC RENOVATIONS
10 EAST PARK SQUARE
MARIETTA, GEORGIA

COBB COUNTY PROPERTY MANAGEMENT DEPARTMENT

Revisions

Date 11AUG2010
Project No. 101012LY

Sheet Title
PENTHOUSE - EXISTING PHASE 2

Sheet No.
M1.01B

Released for Construction

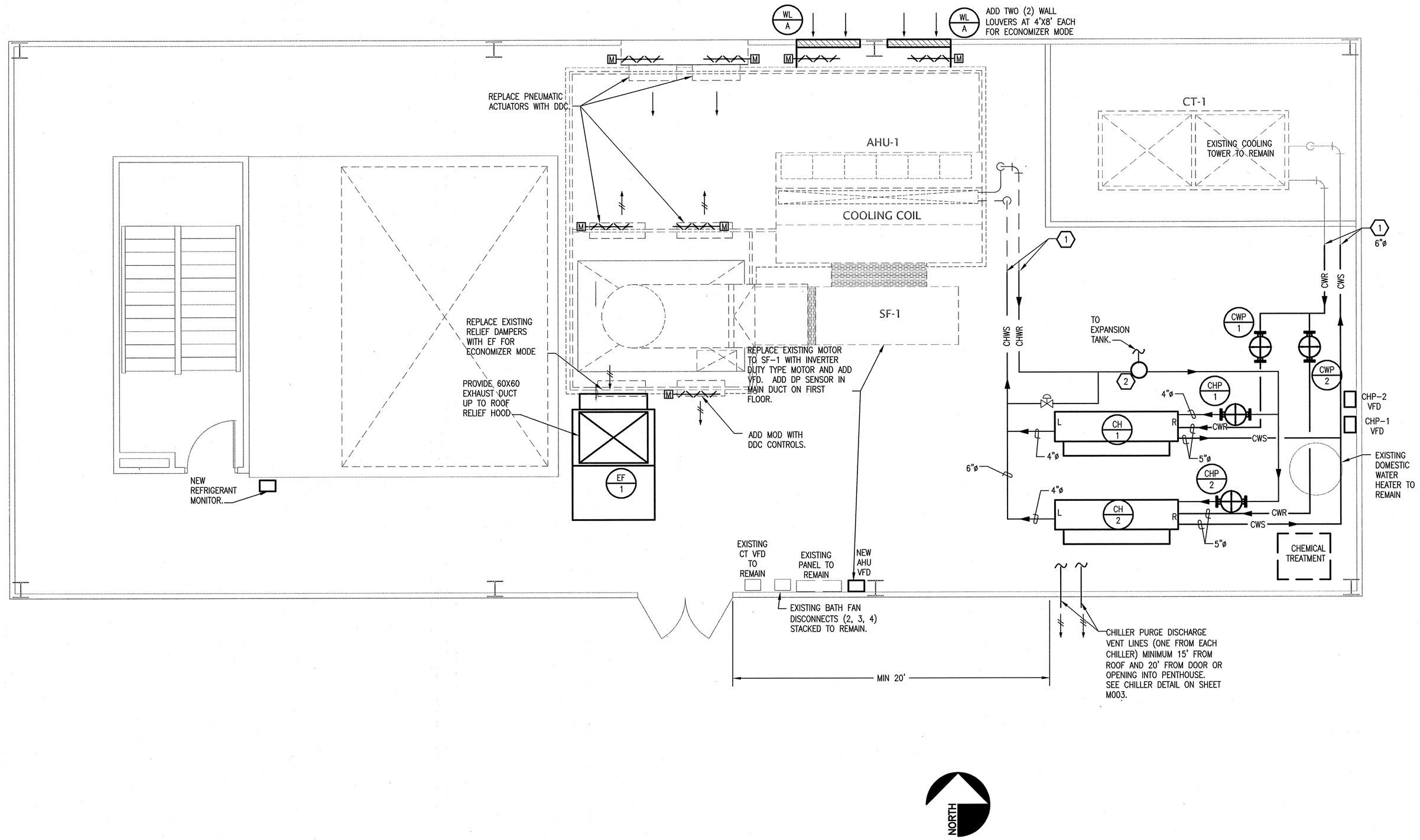

M1.02A PENTHOUSE– BASIS OF DESIGN–PHASE 1

SCALE: 1/4" = 1'–0"

Lilly Young & Associates, Inc.
4275 SHACKLEFORD ROAD
SUITE 130
NORCROSS, GEORGIA 30093
(T)678.533.0300
(F)678.533.0301

THIS DRAWING IS THE PROPERTY OF LILLY YOUNG & ASSOCIATES INC AND IS NOT TO BE REPRODUCED IN WHOLE OR IN PART. IT IS NOT TO BE USED ON ANY OTHER PROJECT AND SHALL BE RETURNED UPON REQUEST. COPYRIGHT AS DATED LILLY YOUNG & ASSOCIATES INC. NOT VALID UNLESS SIGNED AND SEALED.

Print Record

GEORGIA REGISTERED No. 31783 PROFESSIONAL ENGINEER CARLINA M. YOUNG
8-11-10

COBB COUNTY ADMINISTRATION BUILDING
HVAC RENOVATIONS
10 EAST PARK SQUARE
MARIETTA, GEORGIA

COBB COUNTY PROPERTY MANAGEMENT DEPARTMENT

Revisions

Date 11AUG2010

Project No. 101012LY

Sheet Title

PENTHOUSE - BASIS OF DESIGN PHASE 1

Sheet No.

M1.02A

Released for Construction

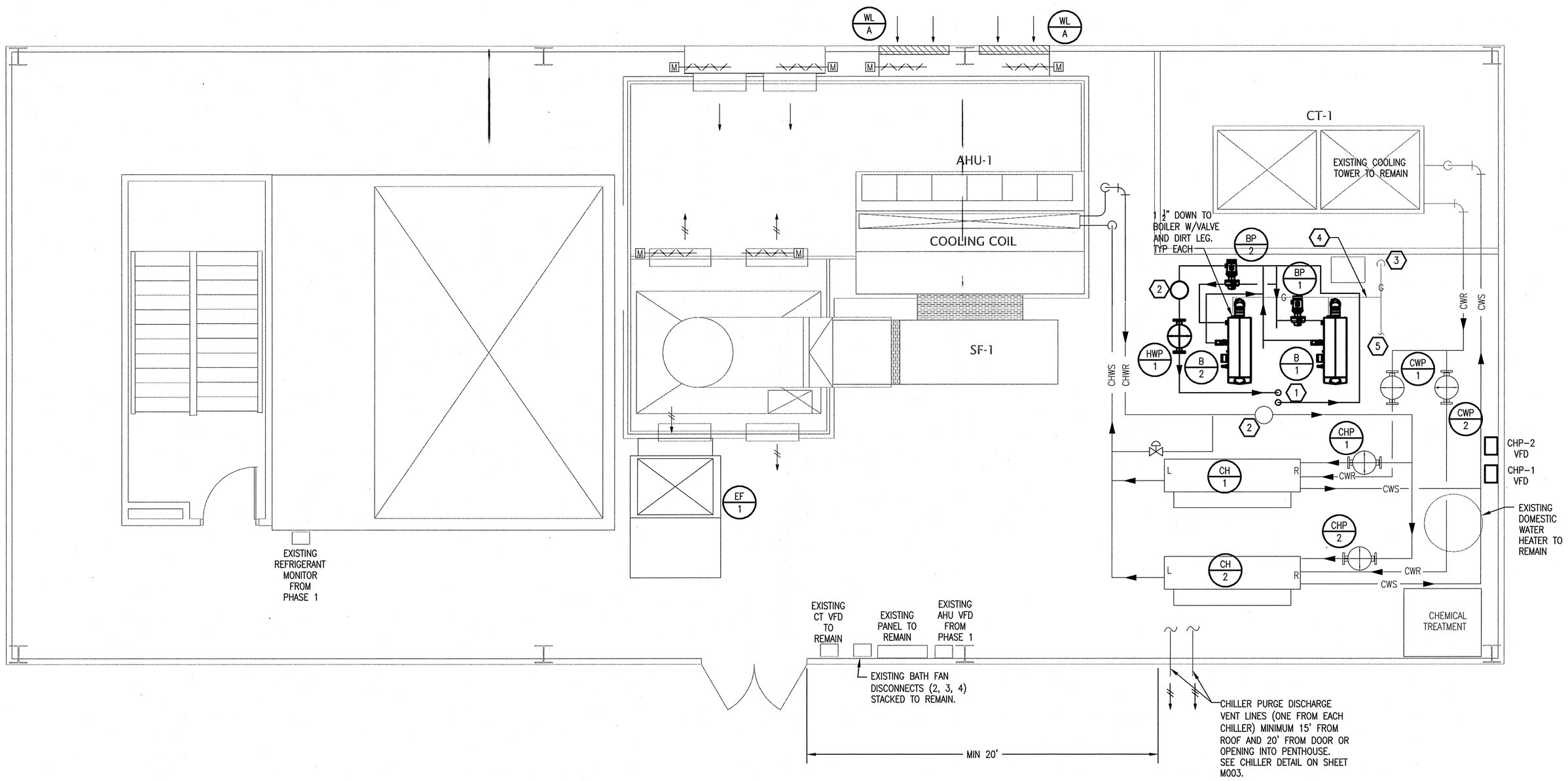

KEY NOTES:

1. CONNECT NEW HOT WATER PIPE TO EXISTING PIPING AT FLOOR.
2. AIR SEPARATOR
3. EXISTING 2 1/2" GAS LINE UP
4. CONNECT TO EXISTING 2" GAS LINE TO BOILERS. EXISTING REGULATOR SHALL BE SET AT 0.5#. IF NOT, REPLACE REGULATOR.
5. EXISTING GAS LINE OVER TO DOMESTIC WATER HEATER

M1.02B PENTHOUSE– BASIS OF DESIGN–PHASE 2

SCALE: 1/4" = 1'–0"

NORTH

Lilly Young & Associates, Inc.
4275 SHACKLEFORD ROAD
SUITE 130
NORCROSS, GEORGIA 30093
(T)678.533.0300
(F)678.533.0301

THIS DRAWING IS THE PROPERTY OF LILLY YOUNG & ASSOCIATES INC AND IS NOT TO BE REPRODUCED IN WHOLE OR IN PART. IT IS NOT TO BE USED ON ANY OTHER PROJECT AND SHALL BE RETURNED UPON REQUEST. COPYRIGHT AS DATED LILLY YOUNG & ASSOCIATES INC. NOT VALID UNLESS SIGNED AND SEALED.

Print Record

GEORGIA REGISTERED No. 31785 PROFESSIONAL ENGINEER REGINA M. YOUNG

8-11-10

COBB COUNTY ADMINISTRATION BUILDING
HVAC RENOVATIONS
10 EAST PARK SQUARE
MARIETTA, GEORGIA

COBB COUNTY PROPERTY MANAGEMENT DEPARTMENT

Revisions

Date 11AUG2010

Project No. 101012LY

Sheet Title

PENTHOUSE - BASIS OF DESIGN PHASE 2

Sheet No.

M1.02B

Released for Construction