COBB COUNTY PURCHASING DEPARTMENT
1772 County Services Parkway
Marietta, Georgia 30008-4012
(770) 528-8400 /FAX (770) 528-1154
Email: purchasing @cobbcounty.org
www.purchasing.cobbcountyga.gov

IMPORTANT NOTICE – PLEASE READ CAREFULLY!!

ALL bids ***MUST*** be received at the Cobb County Purchasing Department**.**

BIDS MUST BE RECEIVED BEFORE 12:00 (NOON) ON BID OPENING DAY

Any bid received later than 12:00 (noon) will not be accepted. The County accepts no responsibility for delays in the mail. Bids are to be mailed or delivered to:

COBB COUNTY PURCHASING DEPARTMENT
1772 COUNTY SERVICES PARKWAY
MARIETTA, GA 30008-4012

All bid prices shall be submitted on the Bid Form included in the bid/proposal.
Any revisions made on the outside of the envelope *WILL NOT* be considered.

PLEASE CHECK bid specifications and advertisement for document requirements.
Documents/Forms listed below ***MUST*** be submitted when required.

Omission of these documents /forms will cause your bid/proposal to be declared **NON-RESPONSIVE.**

- **BID SUBMITTAL FORM**
  ► *Official Signature is required on this form guaranteeing the quotation.*
- **CONTRACTOR AFFIDAVIT and AGREEMENT – Exhibit A (REQUIRED)**
  ► *Affidavit **MUST** be signed, notarized and submitted with any bid requiring the performance of physical services. If the affidavit is not submitted at the time of the bid, bid will be determined non-responsive and will be disqualified.*
- **BID BOND (REQUIRED)**

If your firm is classified as a Disadvantaged Business Enterprise (DBE) please complete Exhibit B with bid response. A Disadvantaged Business Enterprise (DBE) is generally defined as a Female, Black American, Hispanic American and any other minority owned business.

All vendors are required to submit the ORIGINAL AND AT LEAST one (1) duplicated copy of any bid submitted to Cobb County. Please refer to your bid specifications to determine if more than one (1) copy is required. Non-submission of a duplicate copy may disqualify your bid/proposal.

A **"SEALED BID LABEL"** has been enclosed to affix to your bid. This label ***MUST*** be affixed to the outside of the envelope or package, **even if it is a "NO BID" response**. Failure to attach the label may result in your bid being opened in error or not routed to the proper location for consideration. No bid will be accepted after the date and time specified.
Thank you in advance for your cooperation.

ADVERTISEMENT FOR REQUEST FOR PROPOSAL
COBB COUNTY PURCHASING DEPARTMENT

BID OPENING DATE: JANUARY 26, 2012

Sealed proposals from qualified contractors will be receive before 12:00 NOON, January 26, 2012, in the Cobb County Purchasing Department, 1772 County Services Parkway, Marietta, GA 30008 for furnishing all labor. Materials, equipment, appliances, etc. pursuant to the plans, specifications, condition and addenda for:

SEALED BID # 12 - 5622
REQUEST FOR PROPOSAL
DESIGN/BUILD
PHASE II OF POWDER SPRINGS SENIOR CENTER
1150 POWDER SPRINGS ROAD
MARIETTA, GEORGIA 30064

COBB COUNTY PROPERTY MANAGEMENT DEPARTMENT

PRE-PROPOSAL MEETING: JANUARY 10, 2012 @ 10:00 A.M.
COBB COUNTY PROPERTY MANAGEMENT DEPARTMENT
1150 POWDER SPRINGS ROAD
SUITE 200
MARIETTA, GEORGIA 30064

No bids will be accepted after the 12:00 noon deadline.

Proposals are opened at 2:00 p.m. at Cobb County Purchasing Department, 1772 County Services Parkway, 2nd Floor, Bid/Meeting Room, Marietta, GA 30008.

All contractors wishing to submit proposals for this work must submit a qualification statement form (in the proposal package) to be considered. Proposals must be accompanied by bid security in the amount not less than five percent (5%) of the base bid. Performance Bond and Labor and Material Payment Bond, or other security instruments as allowed by law each in the amount equal to 100% of the contract sum will be required of the successful bidder. Bonds must be written by a surety company licensed to do business in the State of Georgia, have a "Best's" rating of "A" or better, appear on the current U.S. Treasury Department list of sureties that are acceptable on bonds for the federal government (circular 570), and have recommended bonds limits equal to or in excess of those required for this project; otherwise acceptable to the owner.

The Georgia Security and Immigration Compliance Act Affidavit form must be submitted with all bid packages involving the "performance of physical services" in order to be considered.

No proposal may be withdrawn for a period of ninety (90) days after date of bid opening, unless otherwise specified in the bid documents. Cobb County will consider the competency and responsibility of bidders in making the award. Cobb County reserves the right to reject any and all proposals, to waive informalities and technicalities, to reject portions of the proposals, and to award contracts in a manner consistent with the County and the laws governing the State of Georgia.

This solicitation and any addenda are available for download in PDF format on the Cobb County Purchasing website. www.purchasing.cobbcountyga.gov

Advertise: December 30, 2011
January 6, 13, 20, 2012

BID SUBMITTAL FORM

SUBMIT BID/PROPOSAL TO:
COBB COUNTY PURCHASING DEPARTMENT
1772 COUNTY SERVICES PARKWAY
MARIETTA. GA 30008-4012

BID/PROJECT NUMBER: 12-5622
REQUEST FOR PROPOSAL
DESIGN/BUILD
PHASE II OF POWDER SPRINGS SENIOR CENTER
1150 POWDER SPRINGS ROAD
MARIETTA, GEORGIA 30064
COBB COUNTY PROPERTY MANAGEMENT DEPARTMENT

DELIVERY DEADLINE: JANUARY 26, 2012 BEFORE 12:00 (NOON) EST
(NO BIDS/PROPOSALS WILL BE ACCEPTED AFTER THIS DEADLINE).

BID OPENING DATE: JANUARY 26, 2012 @ 2:00 P.M. IN THE PURCHASING DEPARTMENT BID ROOM.

BUSINESS NAME AND ADDRESS INFORMATION:

Company name: _____

Contact name: _____

Company address: _____

E-mail address: _____

Phone number: _____ **Fax number:** _____
_____

NAME AND OFFICIAL TITLE OF OFFICER GUARANTEEING THIS QUOTATION:

_____ _____
(PLEASE PRINT/TYPE) NAME TITLE

SIGNATURE OF OFFICER ABOVE: _____
(SIGNATURE)

TELEPHONE: _____ FAX: _____

BIDDER WILL INDICATE TIME PAYMENT DISCOUNT: _____

BIDDER SHALL INDICATE MAXIMUM DELIVERY DATE: _____

Bids received after the date and time indicated will not be considered. Cobb County reserves the right to reject any and all bids, to waive informalities, to reject portions of the bid, to waive technicalities and to award contracts in a manner consistent with the county and the laws governing the state of Georgia.

The enclosed (or attached) bid is in response to Bid Number **12-5622**; is a firm offer, **as defined by section O.C.G.A. (s) 11-2-205 of the code of Georgia (Georgia laws 1962 pages 156-178),** by the undersigned bidder. This offer shall remain open for acceptance for a period of 90 days calendar days from the bid opening date, as set forth in this invitation to bid unless otherwise specified in the bid documents.

NOTICE TO BIDDERS - - BID QUOTES MUST INCLUDE INSIDE DELIVERY CHARGES

Advertise Dates: December 30, 2011
January 6, 13, 20, 2012

SEALED BID LABEL

SEALED BID ENCLOSED

DELIVER TO:
COBB COUNTY PURCHASING
1772 County Services Parkway
Marietta, GA 30008-4012

SEALED BID # 12-5622 DATE: January 26, 2012

BIDS MUST BE RECEIVED BEFORE 12:00 NOON

DESCRIPTION: Request for Proposal
Design/Build
Phase II of Powder Springs Senior Center

PLEASE ATTACH LABEL TO OUTSIDE OF BID PACKAGE

Cobb County...Expect the Best!

"STATEMENT OF NO BID"

COBB COUNTY PURCHASING DEPARTMENT
1772 COUNTY SERVICES PARKWAY
MARIETTA, GA 30008

TO ALL PROSPECTIVE BIDDERS:

Because of the many requests to be placed on our vendors' list, we are continuously updating the list. While we want to include all bona fide vendors, we do not want to mail bids to those vendors who may no longer be interested in participating in our bidding process.

If you do not choose to respond to the attached Invitation to Bid/Request for Proposal, please fill out the form below indicating whether or not you want to be retained on our current vendor list.

Vendors who do not respond in any way (by either submitting a bid or by returning this form) over a period of one year may be removed from the current vendor list.

Vendors who do not wish to bid often return the entire bid package, sometimes at considerable postage expense. Returning the entire bid package is not necessary. Simply return this form.

Thank you for your cooperation.
Cobb County Purchasing Department

"STATEMENT OF NO BID"
SEALED BID NUMBER 12-5622
REQUEST FOR PROPOSAL
DESIGN/BUILD
PHASE II OF POWDER SPRINGS SENIOR CENTER
1150 POWDER SPRINGS ROAD'
MARIETTA, GEORGIA 30064

If you do not wish to respond to the attached Invitation to Bid/Request for Proposal, please complete this form and mail/fax to: **Cobb County Purchasing Department, Attention: Sealed Bid Department, 1772 County Services Parkway, Marietta, GA. Fax # 770-528-1154**

I do not wish to submit a bid/proposal on this solicitation.

I wish to be retained on the vendor list for this commodity or service: Yes_____ No ____

Please PRINT the following:

_____ _____
Company Representative

You are invited to list reasons for your decision not to bid: _____
_____
_____

Cobb County...Expect the Best!

REQUEST FOR PROPOSAL

SEALED BID # 12-5622
DESIGN/BUILD
PHASE II OF POWDER SPRINGS SENIOR CENTER
1150 POWDER SPRINGS ROAD
MARIETTA, GEORGIA 30064
COBB COUNTY PROPERTY MANAGEMENT DEPARTMENT

BID OPENING DATE: JANUARY 26, 2012

PRE-PROPOSAL CONFERENCE: JANUARY 10, 2012 @ 10:00 A.M. (E.S.T.)
COBB COUNTY PROPERTY MANAGEMENT DEPARTMENT
1150 POWDER SPRINGS ROAD
SUITE 200
MARIETTA, GEORGIA 30064

BIDS ARE RECEIVED IN THE
COBB COUNTY PURCHASING DEPARTMENT
1772 COUNTY SERVICES PARKWAY
MARIETTA, GEORGIA 30008
BEFORE 12:00 (NOON) BY THE BID OPENING DATE

BIDS WILL BE OPENED IN THE COBB COUNTY PURCHASING DEPARTMENT
BID/MEETING ROOM AT 2:00 P.M.

VENDORS ARE REQUIRED TO SUBMIT THE ORIGINAL AND 5 COPIES OF BID
(UNLESS OTHERWISE SPECIFIED IN BID SPECIFICATIONS)

N.I.G.P. COMMODITY CODE: 90625

NAME: _____

ADDRESS: _____

_____

REPRESENTATIVE:_____

PHONE: _____ FAX: _____

E-MAIL_____

NOTE: The Cobb County Purchasing Department will not be responsible for the accuracy or completeness of the content of any Cobb County Invitation to Bid or Request for Proposal or subsequent addenda thereto received from a source other than the Cobb County Purchasing Department.

COBB COUNTY REQUEST FOR COMPETITIVE SEALED PROPOSALS

DESIGN / BUILD

PHASE II OF POWDER SPRINGS SENIOR CENTER
1150 POWDER SPRINGS ROAD
MARIETTA, GA 30064

COBB COUNTY PROPERTY MANAGEMENT

SEALED BID #12-5622

Request for Proposals
Design/Build
Phase II of Powder Springs Senior Center
Cobb County Property Management Department
Sealed Bid #12-5622

TABLE OF CONTENTS

Introduction	Page 4
Background	Page 5
Scope of Services	Page 6
Selection Criteria	Page 7
Qualifications & Information	Pages 8
Conflict of Interest Statement	Page 19
Officer's Oath	Page 20
General Instructions for Proposers	Page 21
Georgia Security and Immigration Compliance Act	Page 31
Disadvantaged Business Enterprises	Page 37
Payment Bond Form	Page 40
Performance Bond Form	Page 43
Cobb County Green Policy Statement	Page 46
Sample Contract	Page 47
Geotechnical Report and Information	Attachments

Request for Proposals
Design/Build - Phase II of Powder Springs Senior Center
Cobb County Property Management Department
Sealed Bid #12-5622

The Cobb County Board of Commissioners (Owner) is soliciting competitive sealed proposals from experienced firms for the **PHASE II OF THE NEW POWDER SPRINGS SENIOR CENTER** Design/Build Construction Project. This Project includes final design and the construction for the PHASE II OF THE NEW POWDER SPRINGS SENIOR CENTER.

An award will be made to the responsible and responsive offeror whose proposal is determined to be the most advantageous to Cobb County, taking into consideration the evaluation factors set forth in the Request for Competitive Sealed Proposals (RFP). Proposals shall be received until **12:00 noon on JANUARY 26, 2012** at the Cobb County Purchasing Department located at 1772 County Services Parkway, Marietta, Georgia 30008. Any proposal received after this time will not be accepted. Proposals, timely received, will be opened at 2:00 p.m on January 26, 2011 at the offices of the Cobb County Purchasing Department, 1772 County Services Parkway, Marietta, Georgia 30008. Request for Proposal packages, which include floor plans describing the requested services as well as the relative importance of the evaluation factors will be available upon request through the Cobb County Purchasing Department or on the Cobb County Purchasing website: purchasing.cobbcountyga.gov.

The Cobb County Board of Commissioners reserves the right to reject all proposals, to waive technicalities and informalities, to reject portions of the proposals, and to award contracts in a manner consistent with the interest of Cobb County and the laws of the State of Georgia.

All proposals shall be accompanied by a bid bond in the amount not less than five percent (5%) of the cost proposal. No proposal shall be considered if a proper bid bond or other authorized security has not been submitted. The successful offeror will be required to furnish a satisfactory performance bond and labor and materials payment bond, on forms provided by Owner, each in the amount of the total amount payable by the terms of the contract and will be increased as the contract amount is increased.

No offeror may withdraw its proposal and must honor its proposal for 90 days after the actual date of the opening thereof.

I. Introduction

A County Selection Committee will determine the firm, whose proposal is believed to be most advantageous to the County to provide Design/Build Construction services for Phase II of the New Powder Springs Senior Center, beginning with the verification of the project program, final design, construction through acceptance and start-up of the Facilities to include all necessary staff and support through the One-Year Warranty Period.

The County Selection Committee members will each review the responses to the RFP's and provide a score for each based on the Selection Criteria contained in Section IV. The Selection Committee will convene and summarize the points earned by each offeror, then establish a list of offerors found by the selection committee to have submitted proposals reasonably susceptible of being selected for award. During the competitive sealed proposal process, proposals received will be opened in a manner so as to avoid disclosure of contents to competing offerors and during any process of discussion, the County will not disclose the contents of proposals.

Each firm is to prepare its proposal according to the RFP format, i.e., by section and paragraph of this RFP. Cobb County reserves the right to reject any proposal not submitted within the required time frame; reject any incomplete proposal submitted; contact client references; require further information; and/or require interviews/presentations from any responding firm. All costs related to the preparation, submittal, and/or presentation of a proposal are the responsibility of the offeror and will not be assumed in full or in part by Cobb County. All proposals shall be accompanied by a bid bond in the amount not less than five percent (5%) of the cost proposal. No proposal shall be considered if a proper bid bond or other authorized security has not been submitted.

Written inquiries regarding this RFP may be addressed to:
Cobb County Purchasing Department
1772 County Services Parkway
Marietta, Georgia 30008
Fax: 770-528-1154
Email: purchasing@cobbcounty.org

Written responses to all written inquiries received by 5:00 p.m. on January 20, 2012 will be e-mailed, or faxed to all firms on record with the Cobb County Purchasing Department as having been issued the RFP.

Submit an original and five (5) copies of this RFP to:
Cobb County Purchasing Department
1772 County Services Parkway
Marietta, Georgia 30008

Proposals must be submitted before **12:00 noon, January26, 2012. Proposals must be received in a sealed envelope or container. Place the Project name, BID number, and opening date on the submitting envelope or container.** Proposals will be opened on this same date at 2:00 pm at the Cobb Purchasing Department.

A pre-proposal Conference will be held on Tuesday January 10, 2012, at 10:00 am at the Cobb County Property Management Office located at 1150 Powder Springs Road, Suite 200, Marietta, Georgia 30064. All firms intending to respond to this Request for Proposals are strongly urged to attend.

II. Background

The Phase II of the New Powder Springs Senior Center will operate within the Strip Center holding Phase I of the New Powder Springs Senior Center, located at 1150 Powder Springs Road, Marietta Ga. 30064. This invitation is for the construction documents, permitting, any necessary interior design work, and complete construction management to finish the Neighborhood Center, Wellstar Clinic, Ballroom and Ballroom Storage. Basis for the design (utilizing existing drawings developed by Sizemore Group) is; framing, MEP work scope, finishes, and equipment start-up for the Neighborhood Senior Center, Wellstar Clinic, the Ballroom and Ballroom Storage Room. Entire building is being submitted for LEED Certification. Prepare documentation and submit to Cobb County for final application.

Cobb County will be the Owner and primary occupant of the Project. Design and construction will overlap, so teamwork will be the fundamental ingredient in the relationships between the parties. The Owners' tentative schedule for this project is; select Design/Builder by mid February, 2012, issue Notice to Proceed by end of February, 2012, agree upon final pricing for project by March 2012, begin construction by Mid-April 2012, and complete project by July 2012.

During Pre-Construction, the Design/Build Contractor will be responsible for pricing and value engineering as well as addressing maintainability and constructability issues. Utilize the existing Sizemore Group Drawings, Specifications, and Wellstar supplied specifications. A Guaranteed Maximum Price will be presented by Design/Build Contractor prior to commencement of construction. Construction will commence with the release of distinct work packages while the total design documents are being finalized. The Design/Build Contractor will competitively bid all construction subcontracts and other work appropriate for competitive bidding with the assistance of the Owners' Representative as needed. The entire Team (Selection Committee) will make a recommendation for bid award and will have the opportunity to review all Bid Package results. Upon approval, a contract or Purchase Order will be issued between the Design/Build Contractor and the (Sub) Contractor as is appropriate.

III. Scope of Services

The following is a listing of some of the representative services to be provided by the Design/Build Contractor. The full scope of services will be defined within the contract executed with Cobb County.

A. Design and Pre-construction Phase

1. Utilize the existing Sizemore Group plans and specifications.
2. Review building specifications supplied by Wellstar.
3. Develop a major task based bar schedule.

4. Develop a provisional construction CPM schedule indicating methods and sequencing of construction.
5. Complete design development
6. **Utilize LEED certificate requirements in design with requirements of the Cobb County green policy statement. Prepare documentation and submit to Cobb County for final application**
7. Develop requirements for safety, quality assurance, and schedule adherence.
8. Prepare and complete all necessary final construction documents to demonstrate to the Owner work scope and meeting any and all permit requirements.
9. Perform a "constructability" review of the construction documents.
10. Develop subcontractor bid packages.
11. Provide detailed construction cost estimates to develop into a Guaranteed Maximum Price to achieve Owner's budget.
12. Provide analysis of different construction methods in each major trade group for potential quality, cost, and schedule enhancements.
13. Develop budget to be maintained throughout construction.
14. Determine extent of Special Inspections requirements set by Cobb County.
15. Procure all required permits, approvals, etc.
16. Develop value-engineering options.

B. Construction Phase

1. Maintain on-site staff for construction management.
2. Establish and maintain coordinating procedures.
3. Develop and maintain a detailed schedule (CPM) including delivery, approvals, inspection, testing, construction, and occupancy.
4. Conduct and record job meetings.
5. Prepare and submit change order documentation for approval of the Architect and the County.
6. Maintain a system for review and approval of shop drawings.
7. Maintain records and submit bi-weekly reports and formal monthly reports to Architect and the County.
8. Maintain quality control and ensure conformity to plans.
9. Obtain all Third Party Special Inspections as required by permitting authority.
10. Provide cost control through progress payment review and verifications according to the approved schedule and contract amounts.
11. Obtain Certificate of Occupancy and other relevant documents for Owner to use facility.
12. Develop as-built drawings and deliver to Architect for inclusion into a CADD disk to be submitted to Cobb County for maintenance and operations use.
13. Coordinate post-completion activities, including the assembly of guarantees, manuals, closeout documents, training, and the Owner's final acceptance.
14. Prepare documentation and submit to Cobb County for final application

C. Warranty Phase

1. Coordinate and monitor the resolution of remaining "punch-list" items.
2. Coordinate, monitor, and resolve all warranty issues to the satisfaction of the County during the one-year general warranty period and as extended.

All Local, County, State, and Federal Codes and regulations must be followed, with particular emphasis on Building Codes, Life Safety Codes, and the Americans with Disabilities Act**.**

Once all contract documents are executed, between the County and the successful offeror, the successful offeror will be required to deliver the services required by this RFP. Cobb County must first approve any change in or substitution of project team members, including any consultant, in writing.

IV. Selection Criteria

The Competitive Sealed Proposals will be evaluated based on the information presented in the proposal package, and on an analysis of other publicly available information. The Owner may conduct such investigations or interviews, as it deems necessary to assist in the evaluation of any proposal submitted and to establish to Cobb County's satisfaction the responsibility, qualifications, and financial ability of any offeror.

The evaluation by the Selection Committee will be based on the criteria listed below. The evaluation criteria will not be changed unless **approved** by the County Manager. The weight given to each criterion set forth below shall be determined by the User Department, approved by the Purchasing Manager. The range of acceptable weights are provided at the end of each criterion..

A selection committee designated by Cobb County will evaluate the proposals. The ranking of the proposals shall be based on the evaluation criteria weighted as follows:

****

1. Staffing – Evaluation of the list of personnel specifically assigned to the proposed project, including their qualifications, overall experience and recent experience on projects of similar nature and complexity to the proposed project. (40 points)

2. Experience/Performance – Review of past performance on Cobb County projects or other projects of similar nature and complexity as the proposed project; evaluation of client references whether included in the proposal response or not; evaluation of litigation history for the past five (5) years, including for each case: style of the case, parties to the litigation, court in which litigation was filed, and civil action number: nature of claims; whether the case is pending or resolved, and , if resolved , the date of and manner in which it was resolved (e.g., relief granted by court, settlement by or among parties, dispositive motion, trial verdict); (NOTE-County Attorneys' Office will provide an opinion /statement based on the information provided: points may be deducted , but no new points will be added): overall responsiveness to County's needs. (30 points)

3. Approach – Evaluation of the overall understanding of the scope of the proposed project;

completeness, adequacy and responsiveness to the required information of the request for proposals. (20 points)

4. Availability – Evaluation of the work load of the proposing firm and the staffing to be assigned to the proposed project; time schedule of the proposer in relation to that of the proposed project location of the offices or facilities from which the services are to be provided to the County. (10 points)

5. Cost –Evaluation of the overall cost of the required services as submitted in the Request for Proposal, (50)

6. Financial Stability – Evaluation of the top prospect(s) will be evaluated by the Finance Department in the following areas; Liquidity Ratios (1 point), Financial Leverage Ratios (2 points), Profitability Ratios (1 point), and whether an audited or reviewed Financial Statement is submitted with Proposal (1 point). A maximum of 5 points may be awarded.
Proposers who receive a score of 2 points or less will not be considered for award. Finance will notify the selection committee of points awarded to the top proposers.

It is anticipated that a contract for the described work will be entered into with the Offeror that, in the opinion of Cobb County, offers the most favorable combination of qualifications, approach, and pricing.

The evaluation by the Selection Committee will be based on the criteria listed. The relative importance of the criteria is also listed. The RFP should be prepared per the following Sections as well as a one-page letter of transmittal signed by an owner, officer, or authorized agent of the firm acknowledging and accepting the terms and conditions of this RFP and an executed Conflict of Interest Statement. An executed "Officer's Oath" on the form provided will be required of the successful offeror prior to commencing work. The officer shall file the oath whose duty it is to make the payment. If the contractor is a partnership, all of the partners and any officer, agent, or other person who may have represented or acted for them in bidding for procuring the contract shall also make the oath. If the contractor is a corporation, all officers, agents, or other persons who may have acted for or represented the corporation in bidding for or procuring the contract shall make the oath. If such oath is false, the contract shall be void, and all sums paid by the County on the contract may be recovered by appropriate action.

V. <u>Provide the following Qualifications and Information:</u>

A. Firm or Firms' Information

1. Firm local name, address, and telephone number
2. Primary local contact person(s) and telephone number(s)
3. Total number of firm's local full-time employees
4. Year firm established
5. Local firm's billings for the last three fiscal years
6. Local firms' billing for the current fiscal year
7. Listing and description of all litigation history for the past five (5) years, including for each case: style of the case, parties to the litigation, court in which litigation was filed, and civil action number: nature of claims; whether the case is pending or resolved, and , if resolved , the date of and

manner in which it was resolved (e.g., relief granted by court, settlement by or among parties, dispositive motion, trial verdict).

8. Copy of the most recent 3 completed years of audited financial statements (Income Statement and Balance Sheet) for the local firm
9. Offeror must provide a letter of commitment from Surety or sureties regarding bonding capacity and availability.
10. Cost proposal amount (General Contract Fee, General Conditions, and overhead percentage)
11. Experience with LEED construction requirements.
12. List any OSHA violations within the past 3 years.
13. State your Experience Modification Factor, for the past 3 years, as related to your Workman's Comp Rates.

B. **Experience**:

1. List of full service Design/Build Construction projects completed in the last 5 years. Include: size, cost, total fee, time to complete design services, scope of design services, time to construct facility, description and cost of contractor change orders, special features (energy conservation, etc.), awards received, and type of project (be sure to specify which projects were similar to facilities of this size and type).

2. Provide no more than 3-5 examples of your experience as prime contractor in constructing facilities similar to this project (OR other public and private projects that indicate similar experience). For each of these projects:

a) Provide photographs
b) Provide an owner reference familiar with your performance on the project. ***It is the Offeror's responsibility to ensure that the listed contact and phone number are current.***
c) Provide a Design/Build reference (with current phone number) familiar with your performance on each project.
d) Provide a Program Manager reference (if applicable).
e) List the individual who served as the Project Executive/Director, Project Manager, Superintendent, and Cost Estimator. Please note whether this individual is still employed with your firm.

3. For those projects listed in 1 and 2 above, indicate those projects that included architect, engineering consultant, and contractor serving a corporate or public client *as a team*.

C. **Statement of local firm's capability to absorb additional workload, availability of personnel, and commitment to provide services on a timely basis.**

D. **Staffing Management**

1. Provide a proposed Owner/Architect/Engineer Organizational Chart, which identifies individual names and areas of responsibility.

2. Submit brief resumes of each key team member, as listed below, in this section of the Proposal.

- Design/Builder Project Manager
- Design/Builder Superintendent
- Design/Builder Field Engineer
- Design/Builder Safety Supervisor
- Architect responsible for all architectural issues and specifications.
- Civil Engineer responsible for civil engineering and specifications
- Structural Engineer responsible for structural engineering and specifications
- Life/Safety Engineer (certified) responsible for life/safety engineering and specifications
- Mechanical Engineer responsible for mechanical design and specifications
- Plumbing Engineer responsible for plumbing engineering and specifications
- Electrical Engineer responsible for electrical engineering and specifications
- Instrumentation System Engineer responsible for instrumentation engineering and specifications
- Furnishings, Fixtures & Equipment Specification Technician responsible for selection and specifications
- Other specialty consultants as applicable
- Materials testing & inspection consultant
- Major Subcontractors

Resumes shall show at least the following:

- Name, specialty, job title, and project job title. The project job title must correspond with the positions listed.
- Years of relevant experience with firm, and experience with previous employers. Project experience descriptions must include dates.
- Academic degree(s), discipline and year degree(s) received.
- Professional registrations.
- Name of the firm(s) responsible for the individual and office location where employed.
- A synopsis of specific experience, skills, training, or other qualities, which demonstrate the individual's ability to fulfill the duties of their position.

Provide a current list of other commitments by the Design/Builder and its architects, engineers, and other key team members and estimated completion dates by project in this section of the Proposal. Indicate the current commitments of individual staff to be assigned to the project and involvement with other projects.

3. Please identify the individual who, *from project start to finish*, will be the leader of your construction team and the principal point of contact between your firm and the Owner and Architect along with other consultants.

E. **Services**

1. Provide a comprehensive outline of the steps you propose in order to meet the services required in this RFP. This detail should indicate what is to be done, who individually, and by name is responsible to do it, and when it is to be completed.
2. Please answer the following questions and/or provide adequate responses:
   a) Provide one page overview of services typically performed for similar projects using Design/Build Construction techniques.
   b) How would you implement these services to ensure the success of this project?
   c) How does your firm implement cost control and scheduling activities during preconstruction?
   d) Explain your approach to value engineering, citing relevant, specific examples.
   e) Occasionally, subcontractors and suppliers go bankrupt during the course of a project. What would you do to protect the County from being adversely affected by such an occurrence?
   f) Describe how your firm would assist the County in assuring participation by local contractors. Include examples of other projects where you have been successful in meeting similar goals.
   g) Describe your approach to team work on a project of this magnitude.
   h) Describe how your firm intends to arrange the construction into bid packages in order to reach the county's schedule and budget objectives.

F. **Other**

At your option, you may provide any additional supporting documentation or information, which would be helpful in evaluating your firm's qualifications and commitment.

1. OTHER RELATIVE INFORMATION

   At the discretion of the Offeror, other relative information may be submitted in this section of the Proposal in an effort to further demonstrate that the Offeror can serve the best interests and particular needs of the Owner on this project.

2. ALTERNATIVE PROPOSALS

   Alternative proposals for suggested alternate approaches may be submitted; however, the base proposal will be used for the comparison, evaluation, and ranking of offerors. Alternative proposals must be clearly labeled and arranged in a separate section of the submittal package. Any

alternative proposals would only be considered if the Owner elects to pursue discussions, negotiations, and revisions of the base proposals.

G. **MODIFICATION OR WITHDRAWAL OF PROPOSALS**

A submitted proposal may be retrieved in person by an offeror or its authorized representative if, before the scheduled closing time for receipt of proposals, the identity of the persons requesting retrieval is established and that person signs a receipt for the proposal. If the proposal is retrieved for modification, the sealed proposal must be resubmitted prior to the scheduled closing time for receipt of proposals. If the proposal is not resubmitted, it will be considered as withdrawn.

H. **ADDENDA**

Each proposal schedule shall include specific acknowledgment in the space provided of receipt of all addenda issued by the Owner during the advertisement period. Failure to acknowledge may result in the proposal being rejected as non-responsive.

I. **LAND ACQUISITION**

This project will be constructed on land currently owned by Cobb County.

J. **MISTAKES; CORRECTIONS AND WITHDRAWAL OF PROPOSALS**

After proposals are opened, if the low Offeror claims a serious and honest error in proposal preparation, and can support such claim with evidence satisfactory to the Owner, withdrawal of the proposal without forfeiture of the bid security will be permitted. As a condition of this release, the low Offeror will be prohibited from:

1) Subcontracting or furnishing labor or equipment on this project.
2) Bidding on any Cobb County System projects within ninety (90) days of release by Owner.

K. SITE EXAMINATION

The site of the proposed work is shown on the drawings. The Offeror, before making his proposal, shall examine the drawings, specifications and the site and shall make such examinations on the ground as may be necessary to thoroughly familiarize themselves with the nature and extent of the proposed construction and with all local conditions affecting the work. The Offeror shall also accept the premises in its present condition and carry out all work in accordance with the requirements of the specifications and as shown on the drawings. The Owner will not be responsible for Offeror's errors and misjudgment nor for failure to obtain any information on local conditions or general laws or regulations pertaining thereto.

At the time of the opening of proposals, each Offeror will also be presumed to have read and to be thoroughly familiar with the drawings, Contract Documents (including all addenda), and the construction specifications. The failure or omission of any Offeror to examine any form, instrument, or

document shall in no way relieve any Offeror from any obligation in respect to his proposal.

L. Notice of SPECIAL CONDITIONS;

NONE

M. LAWS AND REGULATIONS; LICENSING

The Offeror's attention is directed to the fact that all applicable Federal and state laws, county and municipal ordinances and the rules and regulations of all authorities having jurisdiction over construction of the project shall apply to the Contract throughout, and they will be deemed to be included in the Contract the same as though herein written out in full.

The State of Georgia has requirements for the licensing of contractors engaged in specific types of construction, including general contracting, electrical, plumbing, and underground utility work [re: OCGA § 43-14]. Any contractor (or subcontractor of any tier) performing regulated work on this project shall furnish proof of valid and current registration to the Owner. Similarly, the State requirements concerning local business licenses shall be met.

N. EXECUTION OF COMPETITIVE SEALED PROPOSALS

The Offeror, in signing his proposal on the whole or any portion of the work, shall conform to the following requirements:

1. Competitive Sealed Proposals, which are not signed by individuals providing said proposal shall have attached thereto a power of attorney evidencing authority to sign the proposal in the name of the person for whom it is signed.
2. Competitive Sealed Proposals, which are signed for a partnership shall be signed by all of the partners or by an attorney-in-fact. There should be attached to the proposal a power of attorney executed by the partners evidencing authority to sign the proposal.
3. Competitive Sealed Proposals, which are signed for a corporation shall have the correct corporate name thereof and the signature of the president or other authorized officer of the corporation manually written below the corporate name following the wording "By _____." The corporate seal shall also be affixed to the proposal.

O. NON-COLLUSION AFFIDAVIT

The Georgia statute concerning public works construction contracting requires that any person who procures such work by bidding or proposal shall make an oath in writing that he/she has not prevented or attempted to prevent competition in such bidding [OCGA § 36-91-21(d),(e)]. If the Design/Builder is a partnership, all of the partners and any officer, agent, or other person who may have represented or acted for them in bidding for or procuring the contract shall make the oath and complete the Affidavit. If the Design/Builder is a corporation, all officers, agents, or other persons who may have acted for or represented the corporation in bidding for or procuring the contract shall make the oath and complete the Affidavit. If such oath is false, the Contract shall be void, and all sums paid by the County on the Contract may be recovered by appropriate action.

P. CONTRACT PERFORMANCE BOND AND PAYMENT BOND

The Design/Builder will be required to furnish a contract performance bond and a payment bond executed by a surety company. This company must be listed in the latest issue of U.S. Treasury Circular 570, registered, and duly authorized to do business in the State of Georgia. The bond must be signed (or countersigned) by a local agent, each in an amount that is at least equal to one-hundred percent (100%) of the Contract Price, as security for the faithful performance of this contract and as security for the payment of all persons performing labor and furnishing material in connection with the Contract.

The surety shall be acceptable to the Owner and the bond shall be executed on the form attached. In case of default on the part of the Design/Builder, all expenses incident to ascertaining and collecting losses under the bond, including both engineering and legal services, shall lie against the bond.

The Design/Builder will be required to provide the Owner a one-year guarantee covering workmanship and materials of the project. The contract performance bond shall remain in force for one year from date of project acceptance by the Owner. The cost of this bond shall be paid by the Design/Builder.

Q. INSURANCE PROOF OF COVERAGE

Be Prepared to discuss a CONTRACTOR CONTROLLED INSURANCE PROGRAM (CCIP) in lieu of the below insurance requirements. Payment and Performance bonds may not be required until Notice to Proceed is issued to Design/Builder. Prior to execution of Contract Documents, a certificate of insurance will be submitted to the Owner as required.

The **Design/Builder** shall procure and maintain for the duration of the Contract insurance against claims for injuries to persons or damages to property which may arise from or in connection with performance of the work hereunder by the **Design/Builder**, his agents, representatives, employees, or subcontractors.

MINIMUM LIMITS OF INSURANCE

Design/Builder shall maintain limits no less than:

A. General Liability
$5,000,000 General Liability combined single limit per occurrence, for bodily injury, personal injury, property damage, contractual liability, and broad form property damage.

B. Automobile Liability
$1,000,000 Automobile Liability combined single limit per accident, for bodily injury and property damage, including owner, non-owned, hired, leased or rented vehicles.

C. Workers' Compensation and Employers' Liability

$100,000 Employers' Liability limit per accident and Worker's Compensation limits as required by the Labor Code of the State of Georgia.

D. Builder's Risk
Full amount of cost proposal minus the amount of Design and Construction Management services. Cobb County should be listed as a Loss Payee under this insurance.

E. Professional Liability
$1,000,000 Professional Liability Insurance to cover damages resulting from errors or omissions of the engineers and/or architects on the Design/Builder's project team.

F. Umbrella Policy
$25,000,000 limit for a combined single limit

DEDUCTIBLES AND SELF-INSURED RETENTION

Any deductibles or self-insured retentions must be declared to and approved by the **Owner**. At the option of the **Owner**, either the insurer shall reduce or eliminate such deductibles or self-insured retentions as respects the **Owner**, its officers, officials, or employees; or the **Design/Builder** shall procure a bond guaranteeing payment of losses and related investigations, claims administration and defense expenses.

OTHER INSURANCE PROVISIONS

The policies are to contain, or be endorsed to contain, the following provisions:

A. General Liability and Automobile Coverage

1. The **Owner**, its officers, officials, employees, and volunteers are to be covered as additional named insureds as respects liability arising out of activities performed by or on behalf of the **Design/Builder**; products and completed operations of the **Design/Builder**; premises owned, occupied or used by the **Design/Builder**; or automobiles owned, leased, hired or borrowed by the **Design/Builder**.

   The coverage shall contain no special limitation on the scope of protection afforded to the **Owner**, its officers, officials, employees, or volunteers. Nothing in this paragraph shall be construed to require the **Design/Builder** to provide liability insurance coverage to the **Owner** for claims asserted against the **Owner** for its sole negligence.

2. Any failure to comply with reporting provisions of the policies shall not affect coverage provided to the **Owner**, its officers, officials, employees, or volunteers.

3. The **Design/Builder's** insurance shall apply separately to each insured against whom claim is made or suit is brought, except with respect to the limits of the insurer's liability.

B. Workers' Compensation and Employers' Liability Coverage
The insurer shall agree to waive all rights of subrogation against the Owner, its officers, officials, employees, and volunteers for losses arising from work performed by the Design/Builder for the Owner.

C. Builder's Risk

The Design/Builder shall secure all-risk type of builder's risk insurance covering work performed under the Contract, and materials, equipment, expedited deliveries or other items to be incorporated therein, while the same are located at the construction site, stored off-site, or at the place of manufacture. The policy shall cover not less than losses due to fire, flood, explosion, hail, lightning, weather, vandalism, malicious mischief, wind, collapse, riot, aircraft, smoke or other cataclysmic events, until the date of final acceptance of the work.

The making of progress payments to the Design/Builder shall not be construed as relieving the Design/Builder or his subcontractors or the insurance company or companies providing the coverage described herein of responsibility for loss or direct physical loss, damage or destruction occurring prior to final acceptance.

D. All Coverage

Each insurance policy required by this clause shall be endorsed to state that coverage shall not be suspended, voided, canceled by either party, reduced in coverage or in limits except after thirty (30) days prior written notice by certified mail, return receipt requested, has been given to the **Owner**.

ACCEPTABILITY

Insurance is to be placed with insurers with a Best's rating of no less than A.VII, or acceptable to the **Owner**.

VERIFICATION OF COVERAGE

A. The Design/Builder shall furnish the Owner with five original Certificates of Insurance, each with original endorsements affecting coverage required by this clause. The certificates and endorsements for each insurance policy are to be signed by a person authorized by that insurer to bind coverage on its behalf. The name of the Insured on the Certificate must exactly match the name on the Agreement/Contract and on the Design/Builder’s corporate seal.

Each certificate must have an original signature in blue ink or a stamped signature in blue ink. Photocopies are not acceptable.

B. The Certificates must include the Cobb County Property Management Project Name and Project Number. The Certificate Holder must be shown as:

Cobb County Board of Commissioners
Cobb County, Georgia
Attention: Cobb County Property Management
57 Waddell Street
Marietta, GA 30060

C. The certificates and endorsements naming additional insureds and indicating required waivers are to be submitted with the executed Agreement/Contract and Performance and Payment Bonds, and shall be approved by the Owner before work commences. The Owner reserves the right to require complete, certified copies of all required insurance policies at any time.

D. The endorsements on the certificates must read as follows:

1. The certificate for All Coverage shall include the following Cancellation endorsement, worded exactly as follows: *"Should any coverage be suspended, voided, cancelled or, reduced in coverage or in limits, thirty (30) days prior written notice delivered by certified mail, return receipt requested, will be given to the Certificate Holder."*
2. The certificate for General Liability and Automobile coverage shall include the following endorsement, worded exactly as follows: *"Owner, its officers, officials, employees and volunteers are covered as additional insureds as respects liability arising out of actions performed by or on behalf of the Design/Builder; products and completed operations of the Design/Builder; premises owned, occupied or used by the Design/Builder; or automobiles owned, leased, hired or borrowed by the Design/Builder."*
3. The certificate for Worker's Compensation and Employers' Liability coverage shall include the following endorsement, worded exactly as follows: *"The insurer agrees to waive all rights of subrogation with respect to Worker's Compensation and Employers' Liability Coverage against the Owner, its officers, officials, employees, and volunteers for losses arising from work performed by the Design/Builder for the Owner."*

SUBCONTRACTORS

Design/Builder shall include all subcontractors as insured under its policies or shall furnish separate certificates and endorsements for each subcontractor. All coverage for subcontractors shall be subject to all of the requirements stated herein.

R. AWARD OF CONTRACT

The Offeror to whom the Contract is being awarded will be required to execute the agreement and obtain the performance bond, payment bond and provide insurance certificates acceptable to the Owner within twenty-one calendar days from the date when the notice of award is issued to the Offeror. In case of failure of the Offeror to execute the agreement or provide insurance or meet bonding requirements, the Owner

may consider the Offeror in default, in which case the bid security accompanying the proposal shall become payable to the Owner.

S. OWNERSHIP OF PROPOSAL DOCUMENTATION

Upon receipt of the Proposal by the Owner, the Proposal and all included documentation shall become the property of the Owner, without compensation to the Offeror, for disposition or usage by the Owner at its discretion. The Owner assumes no responsibility or obligation to firms providing proposals and will make no payment for any costs associated with the preparation or submission of proposals. All work, including but not limited to planning, programming, cost estimates and summaries, plans, specifications and other materials prepared by or for the firms proposing to the Owner under this Invitation for Proposals shall become the property of the Owner

Conflict of Interest Statement

As a duly authorized representative of the firm _____

I, _____with the title_____certify

that to the best of my knowledge no circumstances exist that will cause a conflict of interest in performing services for Cobb County Government, that no employee of Cobb County, nor any public agency official or employee affected by this Request for Proposals has any pecuniary interest in the business of this firm, associates or consultants of this firm, or the firm's parent firm, subsidiary, or other legal entity of which this firm is a part, and that no person associated with or employed by this firm has any interest that would conflict in any way, manner or degree with the performance of services for Cobb County Government.

Date: _____

Company Name: _____

Authorized Representative Name: _____

Title: _____

Signature: _____

Officer's Oath

As a duly authorized representative of the firm involved in the bidding for or procuring the contract _____
I, _____with the title_____certify that I did not prevent or attempt to prevent competition in such proposals by any means whatsoever. Nor did I prevent or endeavor to prevent anyone from making a proposal therefore by any means whatsoever, or induce another to withdraw a proposal for the work.

Date: _____

Company Name: _____

Authorized Representative Name: _____

Title: _____

Signature: _____

Cobb County General Instructions for Proposers, Terms and Conditions

I. Preparation of Proposals

Each proposer shall examine the drawings, specifications, schedule and all instructions. Failure to do so will be at the proposer's risk, as the proposer will be held accountable for their proposal response.

Unit price for each quotation shall be shown and such price shall include packing unless otherwise specified, along with a total and grand total where applicable. In case of discrepancy between a unit price and extended price, the unit price will be presumed correct.

Each proposer shall furnish all information required by the proposal form or document. Each proposer shall sign the proposal and print or type his or her name on the schedule. The person signing the proposal must initial erasures or other changes. An authorized agent of the company must sign proposals.

Requests for Proposals (RFP) issued by Cobb County are advertised on the Cobb County Internet site (www.purchasing.cobbcountyga.gov) and every Friday in the Cobb County legal organ, the Marietta Daily Journal.

II. Delivery

Each proposer should state time of proposed delivery of goods or services. Words such as "immediate", "as soon as possible", etc. shall not be used. The known earliest date or the minimum number of calendar days required after receipt of order (delivery A.R.O.) shall be stated (if calendar days are used, include Saturday, Sunday and holidays in the number).

III. Explanation to Proposers

Any explanation desired by a proposer regarding the meaning or interpretation of the Request for Proposal, drawings, specifications, etc. must be received in writing by 5:00 pm **Tuesday, January 17, 2011** in order for a reply to reach all proposers before the close of the bid. Any information concerning an RFP will be furnished to all prospective proposers as an addendum to the invitation if such information is necessary or if the lack of such information would be prejudicial to uninformed proposers.

Submit questions in writing to:
Cobb County Purchasing Department
1772 County Services Parkway
Marietta, GA 30008
Fax: 770-528-1154
Email: purchasing@cobbcounty.org

The written proposal documents supersede any verbal or written communication between parties. Addenda are posted on the Purchasing web site:

www.purchasing.cobbcountyga.gov. Receipt of addenda should be acknowledged in the submitted proposal. It is the proposer's ultimate responsibility to ensure that they have all applicable addenda prior to bid submittal.

IV. Submission of Proposals

Proposals shall be enclosed in a sealed package, addressed to the Cobb County Purchasing Department with the name and address of the proposer, the date and hour of opening, and the request for proposal number on the face of the package. Telegraphic/faxed proposals will not be considered. Any addenda should be enclosed in the sealed envelopes as well. **All bids shall be submitted on the Bid Proposal Form. Any revisions made on the outside of the envelope will not be accepted.**

Unsigned proposals will not be considered.

Cobb County is exempt from federal excise tax and Georgia sales tax with regards to goods and services purchased directly by Cobb County. Suppliers and contractors are responsible for federal excise tax and sales tax, including taxes for materials incorporated in county construction projects. Suppliers and contractors should contact the State of Georgia Sales Tax Division for additional information.

Except as otherwise provided by law, information submitted by a proposer in the proposal process shall be subject to disclosure after proposal award in accordance with the Georgia Open Records Act. Proprietary information must be identified. Entire proposals may not be deemed proprietary.

V. Withdraw Proposal Due To Error

The proposer shall give notice in writing of his claim of right to withdraw his proposal without penalty due to an error within two (2) business days (48 hours) after the conclusion of the proposal opening. Proposals may be withdrawn from consideration if the price was substantially lower than the other proposals due solely to a mistake therein, provided the proposal was submitted in good faith, and the mistake was a clerical mistake as opposed to a judgment mistake, and was actually due to an unintentional arithmetic error or an unintentional omission of a quantity of work, labor or material made directly in the compilation of the proposal, which unintentional arithmetic or unintentional omission can be clearly shown by objective evidence drawn from inspection of original work papers, documents and materials used in the preparation of the proposal sought to be withdrawn. The proposer's original work papers shall be the sole acceptable evidence of error and mistake if he elects to withdraw his proposal. If a proposal is withdrawn under the authority of this provision, the lowest remaining responsive proposal shall be deemed to be low proposal. Proposal withdrawal is not automatically granted and will be allowed solely at the discretion of Cobb County.

No proposer who is permitted to withdraw a proposal shall, for compensation, supply any material or labor or perform any subcontract or other work agreement for the person or firm to whom the contract is awarded or otherwise benefit, directly or indirectly, from the performance of the project for which the withdrawn proposal was submitted.

VI. F.O.B. Point

Unless otherwise stated in the request for proposal and any resulting contract, or unless qualified by the proposer, items shall be shipped F.O.B. Destination. The seller shall retain title for the risk of transportation, including the filing for loss or damages. The invoice covering the items is not payable until the items are delivered and the contract of carriage has been completed. Unless the F.O.B. clause states otherwise, the seller assumes transportation and related charges either by payment or allowance.

VII. Patent Indemnity

The contractor guarantees to hold the County, its agents, officers or employees harmless from liability of any nature or kind for use of any copyrighted or uncopyrighted composition, secret process, patented or unpatented invention, articles or appliances furnished or used in the performance of the contract, for which the contractor is not the patentee, assignee or licensee.

VIII. Award

Award will be made to the highest scoring responsive and responsible proposer according to the criteria stated in the proposal documents. The County may make such investigations as it deems necessary to determine the ability of the proposer to perform, and the proposer shall furnish to the County all such information and data for this purpose as the County may request. The County reserves the right to reject any proposal if the evidence submitted by, or investigations of such proposer fails to satisfy the County that such proposer is properly qualified to carry out the obligations of the contract.

The County reserves the right to reject or accept any or all proposals and to waive technicalities, informalities and minor irregularities in the proposals received. The County reserves the right to make an award as deemed in its best interest which may include awarding a proposal to a single proposer or multiple proposers; or to award the whole proposal, only part of the proposal, or none of the proposal to single or multiple proposers, based on its sole discretion of its best
interest.

Time payment discounts will be considered in arriving at net prices and in award of proposal.

IX. County Furnished Property

The County will furnish no material, labor or facilities unless so provided in the RFP.

X. Rejection of Proposals

Failure to observe any of the instructions or conditions in this request for proposal may constitute grounds for rejection of proposal.

XI. Contract

Each proposal is received with the understanding that the acceptance in writing by the County of the offer to furnish any or all of the commodities or services described therein shall constitute a contract between the proposer and the County which shall bind the proposer on his part to furnish and deliver the articles quoted at the prices stated in accordance with the conditions of said accepted proposal. The County, on its part, may order from such contractor, except for cause beyond reasonable control, and to pay for, at the agreed prices, all articles specified and delivered.

Upon receipt of a proposal containing a Cobb County "Sample Contract" as part of the requirements, it is understood that the proposer has reviewed the documents with the understanding that Cobb County requires that all agreements between the parties must be entered into via these documents. If any exceptions are taken to any part, each exception must be stated in detail and submitted as part of the proposal document. If no exceptions are stated, it is assumed that the proposer fully agrees to the "Sample Contract" in its entirety. The County reserves the right to make changes to the "Sample Contract".

XII. Delivery Failures

Failure of a contractor to deliver within the time specified or within reasonable time as interpreted by the Purchasing Director, or failure to make replacements of rejected articles/services when so requested, immediately or as directed by the Purchasing Director, shall constitute authority for the Purchasing Director to purchase in the open market or rebid for articles/services of comparable grade to replace the articles/services rejected or not delivered. On all such purchases, the contractor shall reimburse the County within a reasonable time specified by the Purchasing Director for any expense incurred in excess of contract prices, or the County shall have the right to deduct such an amount from monies owed the defaulting contractor. Alternatively, the County may penalize the contractor one percent (1%) per day for a period of up to ten (10) days for each day that delivery or replacement is late. Should public necessity demand it, the County reserves the right to use or consume articles/services delivered which are substandard in quality, subject to an adjustment in price to be determined by the Purchasing Director.

XIII. Non-Collusion

By submission of a proposal, the proposer certifies, under penalty of perjury, that to the best of its knowledge and belief:

(a) The prices in the proposal have been arrived at independently without collusion, consultation, communications, or agreement, for the purpose of restricting competition, as to any matter relating to such prices with any other vendor or with any competitor.

(b) Unless otherwise required by law, the prices which have been quoted in the proposal have not been knowingly disclosed by the proposer prior to opening, directly or indirectly, to any other proposer or to any competitor

(c) No attempt has been made, or will be made, by the proposer to induce any other person, partnership or corporation to submit or not to submit a proposal for the purpose of restricting competition.

Collusion and fraud in bid preparation shall be reported to the State of Georgia Attorney General and the United States Justice Department.

XIV. Conflict Of Interest, Etc.

By submission of a proposal, the proposer certifies, under penalty of perjury, that to the best of its knowledge and belief:

1. No circumstances exist which cause a Conflict of Interest in performing the services required by this RFP, and
2. That no employee of the County, nor any member thereof, not any public agency or official affected by this RFP, has any pecuniary interest in the business of the responding firm or his sub-consultant(s)has any interest that would conflict in any manner or degree with the performance related to this RFP.

The responding firm also warrants that he and his sub-consultant(s) have not employed or retained any company or person other than a bona fide employee working solely for the responding firm or sub-consultant(s) to solicit or secure a contract agreement with Cobb County, as related to this RFP, and that he and his sub-consultant(s) have not paid or agreed to pay any person, company, corporation, individual, or firm other than a bona fide employee working solely for the responding firm or his sub-consultant(s) any fee, commission, percentage, gift, or other consideration contingent upon or resulting from the award of this Agreement.

For any breach or violation of this provision, the County shall have the right to terminate any related contract or agreement without liability and at its discretion to deduct from the price, or otherwise recover, the full amount of such fee, commission, percentage, gift, payment or consideration.

The successful responding firm shall require each of its sub-consultant(s) to sign a statement certifying to and agreeing to comply with the terms of the subsections above.

XV. Default

The contract may be cancelled or annulled by the Purchasing Director in whole or in part by written notice of default to the contractor upon non-performance or violation of any contract term. An award may be made to the next highest rated responsive and responsible proposer, or articles specified may be purchased on the open market similar to those terminated or the County may issue a new Request for Proposal. In any event, the defaulting contractor (or his surety) shall be liable to the County for costs to the County in excess of the defaulted contract prices; provided, however, that the contractor shall continue the performance of this contract to the extent not terminated under the provisions of this clause. Failure of the contractor to deliver materials or services within

the time stipulated on its proposal, unless extended in writing by the Purchasing Director, shall
constitute contract default.

XVI. Disputes

Except as otherwise provided in the contract documents, any dispute concerning a question of fact arising under the contract which is not disposed of shall be decided after a hearing by the Purchasing Director who shall reduce his/her decision to writing and mail or otherwise furnish a copy thereof to the contractor. The decision of the Purchasing Director shall be final and binding, however, the contractor shall have the right to appeal said decision to a court of competent jurisdiction.

XVII. Substitutions

Proposers offering and quoting on substitutions or who are deviating from the attached specifications shall list such deviations on a separate sheet to be submitted with their proposal. The absence of such a substitution list shall indicate that the proposer has taken no exception to the specifications contained therein.

XVIII. Ineligible Proposers

The County may choose not to accept the proposal of one who is in default on the payment of taxes, licenses or other monies owed to the County. Failure to respond three (3) consecutive times for any given commodity may result in removal from the list under that commodity.

XIX. General Information

Sealed proposals, with original signatures, will be accepted by the County Purchasing Department at the time, place, and date specified. One (1) original and six (6) copies of the proposal must be submitted, complete with a cover letter signed by an official within the organization who has authority over project negotiation.

These proposals must be in accordance with the purposes, conditions, and instructions provided in this RFP. The Cobb County Board of Commissioners assumes no responsibility for proposals received after the submission time, whether due to mail delays or any other reason. Proposals received after the submission time will be filed unopened and considered non-responsive.

As previously stated under IV, unsigned proposals will not be considered.

Cobb County reserves the right to retain all proposals submitted, and to use any idea in any proposal regardless of whether that proposal is selected. All work performed by the successful respondent shall be performed in compliance with the Americans With Disabilities Act.

XXI. Uniformity of Proposal

To facilitate comparative analysis and evaluation of proposals it is desired that a uniform format be employed in structuring each proposal. The respondent's degree of compliance with the requirements of the RFP will be a factor in the subsequent point-based evaluation of the proposal. Proposals with major deviations or omissions many not be considered for detailed study. Proposals will become part of the contract with Cobb County should they be selected under the RFP.

XXII. Request Additional Information

Inquiries that must be answered in regards to the Proposal procedures or technical matters must be submitted in writing via U.S. Mail or facsimile or email to:

Cobb County Purchasing Division
1772 County Services Parkway
Marietta, Georgia 30008-4021
Fax: (770) 528-1154
Email: purchasing@cobbcounty.org

Cobb County will not orally or telephonically address any question or clarification regarding specifications or procedures. Cobb County is not bound by any oral representations, clarifications, or changes made to the written specification by County employees, unless such clarification or change is provided to the respondent in written addendum from Cobb County.

XXIII. Firm Prices

Prices quoted by proposal shall be firm and best prices. Prices quoted must be valid for a minimum of ninety (90) days from the date of bid opening.

XXIV. Proposal/Presentation Costs

The cost for developing a proposal will be borne by the respondent. Cobb County is not liable for any costs incurred by the respondent in preparation and/or presentation of proposals in response to this RFP or for travel and other costs related to this RFP.

XXV. Proposal Format

Presentation of the relevant information is at the discretion of the respondent; however, the proposal must address all items identified in Section Titled, Proposal Requirements. To assist in the evaluation of proposals resulting from the RFP, it is recommended that each proposal be written in a concise and forthright manner and that unnecessary marketing statement and materials be avoided.

XXVI. Indemnification/Hold Harmless

By submission of a proposal, the selected responding firm agrees to indemnify Cobb County to the fullest extent permitted by law, protect, defend, indemnify and hold harmless Cobb County, its officers, officials, employees and volunteers from and against all claims, actions, liabilities, losses (including economic losses), or costs arising out of any actual or alleged a) bodily injury, sickness, disease, or death; or injury to or destruction of tangible property including the loss of use resulting there from; or any other damage or loss arising out of or resulting claims resulting in whole or part from any actual or alleged act or omission of the responding firm, sub-consultant, anyone directly or indirectly employed by any of them; or anyone for whose acts any of them may be liable in the performance of work; b) violation of any law, statute, ordinance, governmental administrative order, rule, regulation, or infringements of patent rights or other intellectual property rights by the responding firm in the performance of work; or c) liens, claims or actions made by the responding firm or other party performing the work, as approved by Cobb County.

The indemnification obligations herein shall not be limited to any limitation on the amount, type of damages, compensation, or benefits payable by or for the responding firm or its sub-consultant(s), as approved by the County, under workers' compensation acts, disability benefit acts, other employee benefit acts, or any statutory bar or insurance.

XXVII. Proposal Evaluation

The Evaluation process will address current requirements and consider possible future operation and maintenance needs. Both objective and subjective rationale will be involved in the decision process.

1. Evaluation Responsibility
   A selection committee will coordinate the review of all proposals and will submit a recommendation to the County Manager and Board of Commissioners.
2. Presentations
   During the evaluation process, the members of the selection committee may require that responding firms conduct a presentation. If required, these presentations will be scheduled in advance and limited in time. Location of the presentations will be pre-arranged.
3. Evaluation Criteria
   The County will use a specific set of criteria for the qualitative evaluation of competitive proposals. The structure of the evaluation will be to assign points to each response in a number of categories. A non-response to a specific category will result in no points being awarded for that category. Final rankings will be based on a combination of price and qualitative factors.
   See Page 7 for Evaluation Criteria.

All proposal requirements must be met, or capable of being met by the responding firm or the proposal will be disqualified as non-responsive. It is extremely important that project schedules are met. Only those firms or teams with the

necessary resources and a commitment to complete all project work on schedule should submit a Proposal.

XXVIII. Multi-Year Contract Provisions

The successful respondent will be required to enter into a contract containing the provisions as required by Georgia law pertaining to multi-year contracts. The following is a sample of the provision and will be adjusted as to the term or as to the length of the contract.

This contract shall terminate absolutely and without further obligation on the part of Cobb County at the close of the calendar year in which it was executed, and at the close of each succeeding calendar year for which it may be renewed as provided in O.C.G.A. Section 36-60-13. The contract shall automatically renew for each of the remaining calendar years provided for in the contract, unless positive action is taken by Cobb County to terminate such contract, and the nature of such action shall be written notice provided to the consulting firm within sixty (60) days before the end of the initial year of the contract or each succeeding remaining calendar year.

This contract shall terminate immediately and absolutely at such time as appropriated and otherwise unobligated funds are no longer available to satisfy the obligations of Cobb County under this contract.

XXIX. Proposal Requirements

The respondents must demonstrate competence and experience in the area of expertise outlined in this Request for Proposal.

If required, respondents must demonstrate competence and experience in public speaking and graphic presentations for the purpose of conveying project information to large and diverse community groups. Respondents should also be able to demonstrate the ability to build consensus among public and private interest groups related to this project.

XXX. Cover Letter/Executive Summary

Respondents shall provide a cover letter or letter of transmittal to briefly summarize the company's interest and relevant qualifications for the project. This letter shall not exceed two (2) pages, and shall be signed by an agent of the responding firm who is authorized to negotiate the details of the proposed services.

XXXI. Project Team

Respondents shall provide an organizational chart for the proposed project team, as well as the relevant background and experience for every proposed team member.

XXXII. Special Terms And Conditions

Should these General Terms and Conditions be in conflict with any attached Special Terms and Conditions, the Special Terms and Conditions will control.

XXXIII. Disadvantaged Business Enterprises (DBE): The following provisions should be carefully read to determine applicability to your business.

Cobb County Government encourages the participation of all businesses in offering their services and/or products. The Cobb County Government has the goal to fairly and competitively procure the best product at the most reasonable cost.

A Disadvantaged Business Enterprise (DBE) is generally defined as a Female, Black American, Hispanic American and any other minority owned business. The Federal Government has long had program in place to ensure participation of DBE vendors and suppliers. The State of Georgia has established a similar program whereby DBE firms are defined, certified and made known. This effort is managed by the Georgia Department of Transportation (GDOT). More information can be obtained from GDOT web site:

1. http://www.dot.state.ga.us/eeo-div/index.shtml

The Cobb County Government addresses DBE business participation (frequency and dollar value) in the following ways:

1. Cobb County wishes to identify all DBE participation; both at the contractor and sub-contractor levels in the following ways.

    a. DBE businesses are requested to identify such status at the time they register as a vendor.

    b. DBE businesses are requested to identify themselves at the time they propose to do business. Please complete **EXHIBIT B** if applicable and return with bid submittal.

    c. All businesses will receive with each Purchase Order an instruction sheet for use of the furnished *Cobb County Government DBE Participation Report,* **EXHIBIT C.** Businesses are requested to complete this report and submit it with each invoice for the time period billed.

2. Cobb County has established a Disadvantaged Business Enterprise Plan in accordance with the regulations of the U.S. Department of Transportation (U. S. Department of Transportation (USDOT), 49 CFR Part 26.) The Cobb County Department of Transportation is the lead agency for implementing the USDOT DBE Program for the County.

The Plan applies only to projects which are clearly indicated by the County.

Compliance with Georgia Security and Immigration Compliance Act
PROCEDURES & REQUIREMENTS
(Effective 10-28-2010 - Supersedes All Previous Versions)

BACKGROUND

Pursuant to the "Georgia Security and Immigration Compliance Act," Cobb County cannot enter into a contract for the physical performance of services unless the contractor registers and participates in the federal work authorization program to verify information of all newly hired employees or subcontractors. Neither may any contractor or subcontractor enter a contract with the county in connection with the physical performance of services unless the contractor and/or subcontractor registers and participates in the federal work authorization program to verify information of all new employees. O.C.G.A. § 13-10-91.

Before any bid for the physical performance of services is considered, the bid must include a signed, notarized affidavit from the contractor attesting to the following: (1) the affiant has registered with and is authorized to use the federal work authorization program; (2) the user ID number and date of authorization for the affiant; and (3) the affiant is using and will continue to use the federal work authorization program throughout the contract period. O.C.G.A. § 13-10-91 (b) (1). Affidavits shall be maintained for five years from the date of receipt. O.C.G.A. § 13-10-91 (b) (1).

Upon contracting with a new subcontractor, a contractor or subcontractor shall, as a condition of the contract or subcontract, provide Cobb County with notice of the identity of any and all subsequent subcontractors hired or contracted by that contractor or subcontractor within five (5) business days of entering into a contract or agreement for hire with any subcontractor. Such notice shall include an affidavit including the subcontractor's name, address, user ID number, and date of authorization to use the federal work authorization program. O.C.G.A. § 13-10-91 (b) (3).

Based upon the County's experience and desire for full compliance, no work may be commenced by any subsequent subcontractor prior to notice being received by the County that the subcontractor (regardless of tier) is in compliance with the law and the attached Procedures & Requirements, including the preparation and submission of the Contractor (or Subcontractor) Affidavit & Agreement AND the Immigration Compliance Certificate PRIOR to the commencement of any work.

DEFINITIONS

Affidavit – a written statement made or taken under oath before an officer of the court or a notary public or other person who duly has been authorized so to act.

Affiant – the person who makes and subscribes to a statement made under oath (affidavit).

Physical Performance of Services – the building, altering, repairing, improving, or demolishing of any public structure or building or other public improvements of any kind to public real property, including the construction, reconstruction, or maintenance of all or part of a public road; or any other performance of labor for a public employer under a contract or other bidding process.

PROCEDURES & REQUIREMENTS

1. Bid Documents: Bid documents should contain information regarding the contract language and contractual requirements described below.

2. Responsive Bid Documents: Responsive bid documents MUST INCLUDE a signed, notarized affidavit from the contractor in the form attached as EXHIBIT A (CONTRACTOR AFFIDAVIT & AGREEMENT). **If the affidavit is not submitted at the time of the bid, the applicant will be disqualified.**

THIS AFFIDAVIT MUST BE SIGNED, NOTARIZED AND SUBMITTED WITH ANY BID REQUIRING THE PERFORMANCE OF PHYSICAL SERVICES. IF THE AFFIDAVIT IS NOT SUBMITTED AT THE TIME OF THE BID, THE BID WILL BE DETERMINED TO BE NON-RESPONSIVE AND WILL BE DISQUALIFIED.

3. Contract Language & Contractual Requirements: Affirmative language shall be contained in agreements for the performance of services to cover all statutory and County requirements; such language shall require:

(a) That affidavits in the form attached to these "Procedures & Requirements" be executed from a contractor (and any subcontractors, regardless of tier) and notarized, showing compliance with the requirements of O.C.G.A. § 13-10-91 and that such be made part of the contract and/or subcontracts;

(b) That the contractor (and any subcontractors, regardless of tier) fully comply with the requirements for completing and submitting the "Immigration Compliance Certification" and that such certification be received by the County prior to the commencement of any work under the contract or subcontract;

(c) That the contractor (or any subcontractor, regardless of tier) notify the County within five (5) business days of entering into a contract or other agreement for hire with any subcontractor(s), regardless of tier;

(d) That the contractor be responsible for obtaining and providing to the County the "Subcontractor Affidavit & Agreement" and "Immigration Compliance Certification" attached to and required under these "Procedures & Requirements" from each subcontractor, regardless of tier, employed or retained for work under the contract prior to the commencement of any work under the contract or any subcontract;

(e) That Cobb County, Georgia, reserves the right to dismiss, or require the dismissal of, any contractor or subcontractor for failing to provide the required affidavit or certification and/or for failure to comply with the statutory requirements of O.C.G.A. § 13-10-91 and/or for providing false or misleading information upon the required affidavit(s) or certification(s);

(f) That any contractor and/or subcontractor retaining any other subcontractor to perform services under the contract provide legal notice to any subcontractor of the requirements of Cobb County for immigration compliance and further provide notice that Cobb County, Georgia, reserves the right to dismiss, or require the dismissal of, any contractor or subcontractor for failing to provide the required affidavit or certification and/or for failure to comply with the statutory

requirements of O.C.G.A. § 13-10-91 and/or for providing false or misleading information upon the required affidavit(s) or certification(s);

(g) That failure to comply with any of the requirements and procedures of the County (i.e., failure to timely supply required affidavits or compliance certification documents; failure to utilize federal work authorization procedures; failure to permit or facilitate audits or reviews of records by County or State officials upon request; and/or failure to continue to meet any of the statutory or County obligations during the life of the contract) shall constitute a material breach of the agreement and shall entitle the County to dismiss any general contractor or to require the dismissal of any subcontractor or sub/subcontractor (irrespective of tier) for failing to fully comply with these requirements;

(h) That upon notice of a material breach of these provisions, the contractor (or subcontractor, regardless of tier) shall be entitled to cure the breach within ten (10) days and provide evidence of such cure. Should the breach not be cured, the County shall be entitled to all available remedies, including termination of the contract, the requirement that a subcontractor be dismissed from performing work under the contract, and any and all damages permissible by law.

4. Immigration Compliance Certification: Prior to commencing work under any contract for the physical performance of services, the contractor shall complete the "IMMIGRATION COMPLIANCE CERTIFICATION" form attached to these "Procedures & Requirements" and submit the same to the County.

Prior to allowing any other subcontractor to perform work under the contract, the contractor shall obtain a completed "IMMIGRATION COMPLIANCE CERTIFICATION" from each subcontractor (regardless of tier) and submit the same to the County.

FORM ATTACHMENTS:

1. CONTRACTOR AFFIDAVIT & AGREEMENT (EXHIBIT A);
2. SUBCONTRACTOR AFFIDAVIT & AGREEMENT (EXHIBIT A-1);
3. IMMIGRATION COMPLIANCE CERTIFICATION (EXHIBIT A-2).

CONTRACTOR AFFIDAVIT & AGREEMENT
(EXHIBIT A)

This affidavit must be signed, notarized and submitted with any bid requiring the performance of physical services. If the affidavit is not submitted at the time of the bid, the bid will be determined non-responsive and will be disqualified.

By executing this affidavit, the undersigned contractor verifies its compliance with O.C.G.A. § 13-10-91, stating affirmatively that the individual, firm or corporation which is contracting with Cobb County, Georgia, has registered with, is authorized to use, and is participating in a federal work authorization program (an electronic verification of work authorization program operated by the U.S. Department of Homeland Security or any equivalent federal work authorization program operated by the U.S. Department of Homeland Security to verify information of newly hired employees, pursuant to the Immigration Reform and Control Act of 1986 (IRCA) http://www.uscis.gov/portal/site/uscis/menuitem.eb1d4c2a3e5b9ac89243c6a7543f6d1a/?vgnextoid=75bce2e261405110VgnVCM1000004718190aRCRD&vgnextchannel=75bce2e261405110VgnVCM1000004718190aRCRD). The undersigned contractor further attests that it will continue to use the federal Employment Eligibility Verification (EEV) work authorization program throughout the contract period.

The undersigned further agrees that should it employ or contract with any subcontractor(s) or should its subcontractor(s) employ other subcontractor(s) for the physical performance of services pursuant to the contract with Cobb County, Georgia, the contractor or subcontractor will:

(1) Notify the County within five business days of entering into a contract or agreement for hire with any subcontractor(s);

(2) Secure from any subcontractor(s) and/or their subcontractor(s) verification of compliance with O.C.G.A. § 13-10-91 on the attached Subcontractor Affidavit (EXHIBIT A-1) prior to the commencement of any work under the contract/agreement;

(3) Secure from any subcontractor(s) and/or their subcontractor(s) a completed Immigration Compliance Certification (EXHIBIT A-2) prior to the commencement of any work under the contract/agreement;

(4) Provide the subcontractor(s) with legal notice that Cobb County, Georgia, reserves the right to dismiss, or require the dismissal of, any contractor or subcontractor for failing to provide the affidavit and/or for failure to comply with the requirements referenced in the affidavit;

(5) Maintain records of such compliance and provide a copy of each such verification to Cobb County, Georgia, at the time the subcontractor(s) is retained to perform such services or upon any request from Cobb County, Georgia; and

(6) Maintain such records for a period of five (5) years.

_____	_____
EEV (E-Verify) Program User ID Number	EEV Program Date of Authorization
_____	_____
BY: Authorized Officer or Agent [Contractor Name]	Contractor Business Name
_____	_____
Printed Name	Date

SWORN AND SUBSCRIBED BEFORE ME
ON THIS THE ____ DAY OF _____, 201_

_____

Notary Public Commission Expires: _____

Effective 10-28-2010

SUBCONTRACTOR AFFIDAVIT & AGREEMENT
(EXHIBIT A-1)

By executing this affidavit, the undersigned subcontractor verifies its compliance with O.C.G.A. § 13-10-91, stating affirmatively that the individual, firm or corporation which is engaged in the physical performance of services on behalf of Cobb County, Georgia, has registered with, is authorized to use, and is participating in a federal work authorization program (an electronic verification of work authorization program operated by the U.S. Department of Homeland Security or any equivalent federal work authorization program operated by the U.S. Department of Homeland Security to verify information of newly hired employees, pursuant to the Immigration Reform and Control Act of 1986 (IRCA)). The undersigned contractor further attests that it will continue to use the federal Employment Eligibility Verification (EEV) work authorization program throughout the contract period.

The undersigned further agrees that should it employ or contract with any subcontractor(s) or should its subcontractor(s) employ other subcontractor(s) for the physical performance of services pursuant to the contract with Cobb County, Georgia, the undersigned subcontractor will:

(1) Notify the County within five business days of entering into a contract or agreement for hire with any subcontractor(s);
(2) Secure from any subcontractor(s) and/or their subcontractor(s) verification of compliance with O.C.G.A. § 13-10-91 on this Subcontractor Affidavit form (EXHIBIT A-1) prior to the commencement of any work under the contract/agreement;
(3) Secure from any subcontractor(s) and/or their subcontractor(s) a completed Immigration Compliance Certification (EXHIBIT A-2) prior to the commencement of any work under the contract/agreement;
(4) Provide the subcontractor(s) with legal notice that Cobb County, Georgia, reserves the right to dismiss, or require the dismissal of, any contractor or subcontractor for failing to provide the affidavit and/or for failure to comply with the requirements referenced in the affidavit;
(5) Maintain records of such compliance and provide a copy of each such verification to Cobb County, Georgia, at the time the subcontractor(s) is retained to perform such services or upon any request from Cobb County, Georgia; and
(6) Maintain such records for a period of five (5) years.

_____	_____
EEV (E-Verify) Program User ID Number	EEV Program Date of Authorization
_____	_____
BY: Authorized Officer or Agent [Subcontractor Name]	Subcontractor Business Name
_____	_____
Printed Name	Date

SWORN AND SUBSCRIBED BEFORE ME
ON THIS THE ____ DAY OF _____, 201_

_____

Notary Public Commission Expires: _____

Effective 10-28-2010

IMMIGRATION COMPLIANCE CERTIFICATION
(Required to be completed by Contractors and all Subcontractors)
(EXHIBIT A-2)

I certify to the Cobb County Board of Commissioners that the following employees will be assigned to:

_____
(Project Name/Description)

_____ _____ _____

_____ _____ _____

_____ _____ _____

I further certify to Cobb County, Georgia the following:

- The E-Verify program was used to verify the employment eligibility of each of the above-listed employees hired after the effective date of our contract to use the program;
- We have not received a Final Nonconfirmation response from E-Verify for any of the employees listed.
- If we receive a Final Nonconfirmation response from E-Verify for any of the employees listed above, we will immediately terminate that employee's involvement with the project.
- I have confirmed that we have an I-9 on file for every employee listed above and that to the best of my knowledge all the I-9's are accurate.
- To the best of my knowledge and belief, all of the employees on the above list are legally authorized to work in the United States.
- If any other employee is assigned to this Cobb County project, a certification will be provided for said employee prior to the employee commencing work on the project.

To the best of my knowledge and belief, the above certification is true, accurate and complete.

Sworn to by: **Employer Name & Address:**

_____ _____
Signature of Officer

_____ _____
Printed Name/Title

_____ _____
Date

SWORN AND SUBSCRIBED BEFORE ME
ON THIS THE ____ DAY OF _____, 201_

Notary Public
Commission Expires: _____

Effective 10-28-2010

EXHIBIT B

DISADVANTAGED BUSINESS ENTERPRISE (DBE) IDENTIFICATION FORM

A Disadvantaged Business Enterprise (DBE) is generally defined as a Female, Black American, Hispanic American and any other minority owned business. If your firm is classified as a Disadvantaged Business Enterprise (DBE), please complete this form and submit with bid response or send to:

Cobb County Purchasing Department
Attn: Purchasing Director
1772 County Services Parkway
Marietta, GA 30008
Fax: 770-528-1154
Email: purchasing@cobbcounty.org

Name of Business: _____

Address: _____

_____

_____

Telephone: _____

Fax: _____

Email: _____

Certification Number: _____

Name of Organization Certification _____

This information is acquired for informational purposes only and will have no bearing on the award unless otherwise stated

Instructions for Completing Exhibit C
Disadvantaged Business Enterprise (DBE)
Participation Report

All Cobb County Government contractors or vendors are requested to complete a report descriptive of any DBE subcontractor involvement in work for which the government is making payment. If otherwise specified in an RFP/ITB or contract, additional reporting forms may be required as well.

The objective of this request is to assist in the identification of Disadvantaged Business Enterprise (DBE) business participation with the Cobb County Government and to quantify that participation.

The Cobb County Government does not administer a DBE Certification Program. The principle certification agency for the State of Georgia is the Georgia Department of Transportation. As a Contractor/Vendor you are not responsible for verification of any DBE Certification information of your subcontractor.

***** Instructions *****

1. Contractor/Vendor is furnished the one-page ***DBE Monthly Participation Report*** with each Cobb County Government-issued Purchase Order.

2. Contractor/Vendor completes this report for each billing period and attaches it to the invoice to then be sent to the County department/agency receiving the service or product.

3. Upon receipt of a Contractor/Vendor invoice and DBE report, the County department/agency receiving the service or product should keep a copy of the completed DBE report for their reporting process. In order to add or verify the prime contractor is registered as a DBE vendor in AMS, the County department/agency should send a copy of the DBE report to:

Cobb County Purchasing Division
Attn.: DBE Report

A Disadvantaged Business Enterprise (DBE) is a firm that is under the control of someone in an ownership position (at least 51%) that:

1. Has membership in one or more of the following groups: Female, Black American, Hispanic American, Native American, Subcontinent Asian American and Asian-Pacific America. There may be other groups that may be eligible to be certified as DBE.
2. Is a U.S. citizen or lawfully admitted permanent resident of the U.S.
3. Has a personal net worth which does not exceed $750,000.
4. The business meets the Small Business Administration's size standard for a small business. Its annual gross receipts for the three previous fiscal years cannot have exceeded $22,410,000. Depending on the type of work the business performs, other size standards may apply.
5. The business is organized as a for-profit business.
6. The business may also be DBE eligible as a certified U.S. Small Business Administration 8 (a) program.

Exhibit C

Cobb County Government Disadvantaged Business Enterprise Participation Monthly Report

Contractor/Vendor: Please keep this blank report to make copies as needed. Print or type in the report, then send the completed report to the County department/agency receiving the service or product.

County Departments: Keep a copy of this completed report and use the dollar figures to input into your quarterly DBE report to the DBE Liaison (Records Management Division). If you already have a similar reporting method of gathering the dollar figures continue to use it. Send a copy of this completed report to the Purchasing Division (Attn: DBE Report) to add or verify the prime contractor is registered as a DBE vendor in AMS.

Submitted by: _____ Month Invoiced: _____
Name of Prime Contractor/Vendor **From/To:**

Cobb County Project Name: _____ Bid or P.O. Number: _____

Cobb County Department or Agency receiving service or product: _____

Description of Purchased Service/Product: _____

_____

Full Contracted Amount: $_____ Payment amount requested at this time: $_____

1. **Are YOU, the Prime Contractor a DBE business? YES _____ NO _____**
2. **Are YOUR subcontractors DBE vendors? YES _____ NO_____**

Please provide information below for each participating DBE subcontractor(s).

DBE Subcontractor Business Name	Type Service or Product Supplied	DBE Subcontractor Business/Contact Tel. Number	Actual Dollar Value of DBE Subcontractor Participation this Reporting Month
			$
			$
			$
			$
			$
			$

Submitted by: _____
Printed Name

Title or position: _____

Date Completed: _____

Signature of Authorized Representative

COBB COUNTY PROPERTY MANAGEMENT
COBB COUNTY PROPERTY MANAGEMENT
57 WADDELL STREET, MARIETTA, GA 30060-1964

PAYMENT BOND

Bond Number:_____

KNOW ALL MEN BY THESE PRESENTS, that we,_____ as Principal, hereinafter called "**Contractor**", and_____, a corporation duly organized under the laws of the State of_____ listed in the latest issue of U.S. Treasury Circular 570, and registered in State of Georgia, as Surety, hereinafter called "**Surety**", are held and firmly bound unto Cobb County, Georgia, hereinafter called "**Owner**", in the sum of_____(in words), **($__ _____)** (in figures), for the payment of which sum, well and truly to be made, the **Contractor** and **Surety** bind themselves, their heirs, executors, administrators, successors and assigns, jointly and severally, firmly by these presents.

WHEREAS, the **Contractor** has entered into a written contract dated_____ **, 20** _____ with the **Owner** for performance of _____ in accordance with drawings and/or specifications prepared by or for Cobb County which contract is by reference made a part of this bond by reference as if fully set forth herein, and is hereinafter referred to as the **Contract**.

NOW THEREFORE, THE CONDITION OF THIS OBLIGATION is such that, if **Contractor** shall promptly make payment to all claimants as hereinafter defined, for all labor and material used or reasonably required for use in the performance of the Contract, then this obligation shall be void; otherwise it shall remain in full force and effect, subject, however, to the following conditions:

A. A claimant is defined as an entity having a direct contract with the **Contractor** or with a Subcontractor of the **Contractor** for labor, material, or both, used or reasonably required for use in the performance of the Contract, “labor and material” being construed to include but not limited to that part of water, gas, power, light, heat, oil, gasoline, telephone service or rental of equipment directly applicable to the Contract.

B. The **Contractor** and **Surety** hereby jointly and severally agree with the **Owner** that every claimant as herein defined who has not been paid in full before the expiration of a period of ninety (90) days after the date on which the last of such claimant's work or labor was done or performed, or materials were furnished, may sue on this bond for the use of such claimant, prosecute the suit to final judgment for such sum or sums as may be due claimant, and have execution thereon. The **Owner** shall not be liable for the payment of any judgment costs or expenses of any such suit.

C. No suit or action shall be commenced hereunder by any claimant,

1. Unless claimant, other than one having a direct contract with the **Contractor**, shall have given written notice to any two of the following: the **Contractor**, the **Owner**, or the **Surety** above-named, within ninety (90) days after such claimant did or performed the last of the work of labor, or furnished the last of the materials for which said claim is made, stating with substantial specifics and accuracy the amount claimed and the name of the party to whom the materials were furnished, or for whom the work or labor was done or performed. Such notice shall be served by mailing the same by registered mail or certified mail, postage prepaid, in an envelope addressed to the **Contractor**, **Owner** and/or **Surety**, at the addresses provided in the Contract or in this bond, or served in any manner in which legal process may be served in the state in which the aforesaid project is located, save that such service need not be made by a public officer.

2. After one (1) year from the completion of Contract and the acceptance by **Owner** of the work there under, it being understood, however, that if any limitation embodied in this bond is prohibited by any law controlling the construction hereof such limitation shall be deemed to be amended so as to be equal to the minimum period of limitation permitted by such law.

3. Other than in a state court of competent jurisdiction in and or the county or of the state in which the project, or any part thereof, is situated.

D. The amount of this bond shall be reduced by and to the extent of any payment or payments made in good faith hereunder, inclusive of the payment by **Surety** of mechanics' liens which may be filed on record against said improvement, whether or not claim for the amount of such presented under and against this bond.

E. PROVIDED FURTHER, that the said **Surety**, for value received hereby, stipulates and agrees that no change, extension of time, alteration or addition to the terms of the Contract or to the work to be performed there under or the specifications accompanying the same shall in any way affect its obligation on this bond, and it does hereby waive notice of any such change, extension of time, alteration or addition to the terms of the contract or to the work or to the specifications.

IN WITNESS WHEREOF, this instrument is executed in three (3) counterparts, each one of which shall be deemed an original, this _____ day of _____, 20___.

Attest:

By: _____

Attest:

By: _____

_____
Principal/Contractor (SEAL)

_____
Signature

_____
Typed Name

_____
Title

_____
Surety (SEAL)

_____
Signature of Attorney-in-Fact

_____
Typed Name of Attorney-in-Fact

(Bond must not be dated prior to date of Agreement)

PERFORMANCE BOND

Bond Number: _____

KNOW ALL MEN BY THESE PRESENTS, that we, the undersigned as Principal, hereinafter called "**Builder**", and _____, a corporation duly organized under the laws of the State of _____, listed in the latest issue of U.S. Treasury Circular 570, and registered in the State of Georgia, as Surety, hereinafter called "**Surety**", are held and firmly bound unto Cobb County, Georgia, hereinafter called "**Owner**", in the sum of _____ _____ (in words), ($ _____)(in figures), for payment of which sum, well and truly to be made, the **Builder** and **Surety** bind themselves, their heirs, executors, administrators, successors and assigns, jointly and severally, firmly by these presents.

WHEREAS, the **Builder** has entered into a written contract dated _____ **_____, 20_____** with **Owner** for the construction of _____ _____ in accordance with drawings and/or specifications prepared by or for Cobb County which contract is made a part of this bond by reference as if set forth herein and is hereinafter referred to as the "**Contract**."

NOW THEREFORE, THE CONDITION OF THIS OBLIGATION is such that, if **Builder** shall promptly and faithfully perform said **Contract**, then this obligation shall be null and void; otherwise it shall remain in full force and effect.

PROVIDED, FURTHER, that **Surety**, for value received, hereby stipulates and agrees that no change, extension of time, alteration or addition to the terms of the Contract or to the work to be performed there under or the specifications accompanying the same shall in any way affect its obligation on this bond, and it does hereby waive notice of any such change, extension of time, alteration or addition to the terms of the Contract or to the work or to the specifications.

Whenever **Builder** shall be, and declared by **Owner** to be in default under the Contract, the **Owner**, having performed **Owner's** obligations there under, the **Surety** may promptly remedy the default, or shall promptly:

1. Complete the **Contract** in accordance with its terms and conditions; or,

2. Obtain a bid or bids for completing the **Contract** in accordance with its terms, and conditions, and upon determination by the **Owner** and the **Surety** jointly of the responsible and responsive bidder, arrange for a contract between such bidder and **Owner**, and make available as work progresses (even though there should be default or a succession of defaults) under the contract or contracts of completion arranged under this paragraph sufficient funds to pay the cost of completion less the balance of the **Contract** price; but not exceeding, including other costs and damages for which the **Surety** may be liable hereunder, the amount set forth in the first paragraph hereof.

   The term "balance of the contract price", as used in this paragraph, shall mean the total amount payable by **Owner** to **Builder** under the **Contract** and any amendments thereto, less the amount paid by **Owner** to **Builder**.

Any suit under this Bond must be instituted before the expiration of two (2) years from the date on which final payment under the **Contract** falls due

No right of action shall accrue on this Bond to or for the use of any person or corporation other than the **Owner** named herein or the heirs, executors, administrators or successors of the **Owner**.

The **Surety** may only cancel this bond by first providing thirty (30) days written notice to **Owner** and Builder. Such cancellation shall not discharge the **Surety** from liability already accrued under this bond prior to the expiration of the thirty (30) day period.

IN WITNESS WHEREOF, this instrument is executed in four (4) counterparts, each one of which shall be deemed an original, this _____ day of _____, 20_____.

Attest:

By: _____

Attest:

By: _____

_____
Principal/Builder (SEAL)

_____
Signature

_____
Typed Name

President _____
Title

_____
Surety (SEAL)

_____
Signature of Attorney-in-Fact

_____
Typed Name of Attorney-in-Fact

COBB COUNTY GREEN BUILDING POLICY

All new construction and renovation of occupied county building, 5000 square feet or more, where feasible, shall be designed and built to achieve a LEED certification. Other construction and renovations less than 5,000 square feet may also be considered where appropriate. The Green Building Policy shall require a payback of no more that ten years for projects designed to the LEED standard. County staff shall recommend to the Board of Commissioners which level of LEED certifications is appropriate for the particular project based on sustainability and life cycle cost analysis. Where no level of certification is feasible, then the project design and construction shall include as many measures as possible based on the LEED checklist.

SAMPLE CONTRACT

OWNER: COBB COUNTY BOARD OF COMMISSIONERS ("Owner")
COBB COUNTY, GEORGIA
c/o Property Management Department
57 Waddell Street
Marietta, Georgia 30060-1940

CONTRACTOR: As described on Purchase Order ("Contractor")

WORK: ("Work")
(General caption only)

PROJECT: ("Project")

ARCHITECT-ENGINEER: ("Architect")

CONTRACT PRICE: As described on Purchase Order ("Price")

MONTHLY BILLING DATE: To be received at the("Monthly Billing Date")
Cobb County Property Management office by the 25th of each month.

RETAINED PERCENTAGE: Ten (10%) Percent,("Retained Percentage")

CHANGE ORDER COMBINED OVERHEAD AND PROFIT:("Profit Percentage")
Fifteen (15%) Percent

PAYMENT AND PERFORMANCE BONDS: Required____ Not Required_xxxx

(The above terms are incorporated by reference and are more fully explained below.)

Owner, and Contractor, with offices at the addresses shown above, agree for themselves, their successors and assigns as follows:

1. WORK: Contractor shall perform and furnish all labor, supervision, services, materials, equipment, tools, scaffolds, hoisting, transportation, storage and all other things necessary to prosecute and complete the work identified and described in, or which can be reasonably inferred from, Schedule A attached hereto (the "Work"). The Work shall be performed by Contractor in a good and workmanlike manner strictly in accordance with the Contract Documents, consisting of the plans, specifications (including, but not limited to, general, special and supplemental conditions), addenda and other documents identified in Schedule B attached hereto, and all subsequently and duly issued modifications thereto.

Contractor represents and agrees that it has carefully examined and understands the Contract Documents relevant to the Work; has adequately investigated the nature and conditions of the project site and locality; has familiarized itself with conditions affecting the difficulty of the Work and the condition of any equipment to be maintained and/or repaired; and has entered into this Contract based on its own examination, investigation and evaluation and not in reliance upon any opinions or representations of Owner.

2. PRICE: Owner shall pay to Contractor for the satisfactory performance and completion of the Work and performance of all the duties, obligations and responsibilities of Contractor under this Contract, the sum set forth herein as the Price, subject only to additions and deductions as expressly provided in this Contract. To the extent that the Work is to be performed on a unit price basis, the Price shall be computed in accordance with the unit prices set forth in Schedule C, based on actual quantities determined in accordance with the Contract Documents and this Contract. The Price and all unit prices shown in Schedule C shall be deemed to include all costs of Contractor's performance of the Work as set forth in the Contract Documents, including, but not limited to, the costs of labor, supervision, services, materials, equipment, replacement parts/equipment, tools, scaffolds, hoisting, transportation, storage, insurance and taxes, and all overhead and profit.

3. PROGRESS PAYMENTS: Within ten (10) days after the date of transmission of this Contract to Contractor, Contractor shall submit to Owner for Owner's approval a detailed schedule showing a proper cost breakdown (with a proper share of associated overhead and profit) of the Price according to the various line items or parts, of the Work, for use only as a basis for verifying Contractor's applications for payment.

The Contractor shall submit an Application for Payment on the 25th of each month. The Contractor will provide with the Payment Application, a line item breakdown of all previous costs to date plus the amount being applied for. The Owner will make payments to the Contractor within a reasonable period of time after receipt of the Payment Application equal to the value of the Completed Work and Stored Work as of the corresponding Monthly Billing Date, to the extent approved by Owner and Architect, and after deducting (a) all previous payments, (b) current retainage (to a maximum of 10 percent of each progress payment; provided, however, that, when 50 percent of the contract value including change orders and other additions to the Contract value provided for by the Contract Documents is due and the manner of completion of the Contract Work and its progress are reasonably satisfactory to the Owner's authorized Contract Representative, the Owner shall withhold no more retainage. If, after discontinuing the retention, the Owner's authorized Contract Representative determines that the Work is unsatisfactory or has fallen behind schedule, retention may be resumed at the previous level.), (c) all charges or backcharges for services, materials, equipment, or other items furnished or otherwise chargeable to Contractor, and (d) withheld payments if the Owner determines there is unsatisfactory job progress, defective work, disputed work, actual or potential third party claims, failure to make timely payments for labor or materials, damage to other entities connected with the project or reasonable evidence that the contract cannot be completed for the balance of the contract price. Payments that are not unreasonably delayed will bear no interest penalties. The terms of this paragraph and the entire Contract Documents are intended to supersede all provisions of the Prompt Pay Act, O.C.G.A. 13-11-1 through 13-11-11.

Owner reserves the right to advance the date of any payment (including final payment) due or to become due under this Contract if, in its sole judgement, it becomes desirable to do so. The Owner shall not thereby incur any obligation to do so in the future or waive his right to strict compliance with the Contract terms.

Contractor shall not be entitled to any payment until this Contract has been properly executed and all documents and information to be furnished by Contractor have been supplied to Owner. If Owner has a dispute over a portion of the invoices, the undisputed portion will be paid.

4. FINAL RETAINAGE PAYMENT: At substantial completion of the Work and as the Owner's authorized Contract Representative determines the Work to be reasonably satisfactory, the Owner shall within 30 days after the last of the following to occur: (a) delivery of a final application for payment, (b) furnishing of evidence satisfactory to Owner that there are no claims, obligations, or liens outstanding or unsatisfied for labor, services, materials, equipment, taxes, or other items performed, furnished or incurred in connection with the Work, (c) delivery of all guaranties, warranties, bonds, instruction manuals, performance charts, diagrams, as-built drawings and similar items required of Contractor or its suppliers or subcontractors and (d) delivery of a general release, in a form satisfactory to Owner, executed by Contractor running to and in favor of Owner, and such other parties as Owner may require; pay the retainage to the Contractor. If at that time there are any remaining incomplete minor items, an amount equal to 200 percent of the value of each item as determined by the Owner's authorized Contract Representative shall be withheld until such item or items are completed to the Owner's satisfaction.

5. PAYMENT CONDITIONS: Contractor will receive the payments made by Owner and Contractor will hold such payments as a trust fund to be applied first to the payment of laborers, suppliers, subcontractors, and others responsible for

the Work for which such payments are made, including sufficient funds so that all taxes and insurance applicable thereto are also paid and shall comply with all laws applicable thereto.

Contractor shall, as often as requested by Owner, furnish such information, evidence and substantiation as Owner may require with respect to the extent and value of current progress and the nature and extent of all obligations incurred by Contractor in connection with the Work and all payments made by Contractor on account thereof. Contractor shall also furnish, as required by Owner in its sole discretion, such partial or final lien waivers or releases as Owner deems necessary to ensure that Contractor has paid all persons furnishing any labor, material, or services in furtherance of any Work furnished hereunder. If required by Owner, the furnishing of such lien waivers and releases shall be a condition precedent to any payment hereunder. Nothing herein shall constitute any requirement that Owner exercise its discretionary option to require such releases and waivers. Moreover, no prior failure of Owner to require such releases and waivers shall limit Owner's right to require them subsequently.

Owner reserves the right to withhold, as a reserve and without limiting its other rights and remedies, an amount sufficient: (a) to defend, satisfy and discharge any asserted claim that Contractor (or anyone providing any of the Work hereunder) has failed to make payment for labor, services, materials, equipment, taxes, or other items or obligations furnished or incurred in connection with the Work or has caused damage to the Work or to any other work on the Project; (b) to complete the Work if it appears that funds remaining in the Contract, including retainage and exclusive of backcharges, are insufficient to complete the Work; (c) to reimburse Owner for any backcharges incurred as a result of any act or omission by Contractor hereunder; (d) to protect Owner from the possible consequences of any other breach or default by Contractor hereunder; or (e) to secure Owner with respect to any breach or default by Contractor or its affiliates, parent company and subsidiaries under any other agreement. Payment hereunder shall not be evidence of the proper performance or progress of the Work and no payment shall be construed to be acceptance of defective, faulty or improper work or materials.

6. TIME: Time is of the essence. Therefore, Contractor shall: (a) submit, with its proposed schedule, information showing the time required to prepare and approve shop drawings, to fabricate and deliver materials and equipment, and to install the Work; (b) order (for manufacture or purchase and delivery) all materials required for performance of the Work as soon as possible in order to avoid delays caused by strikes;, transportation or unavailability; (c) furnish Owner within thirty (30) days a list of major materials and equipment required for the Work, showing the name, address and telephone number of the supplier and the date on which such material and equipment is expected to be delivered to the Project site; (d) furnish Owner, upon issuance, a copy of each major purchase order and subcontract (with price information deleted); (e) cause a qualified home office supervisory representative (while Contractor has forces at the Project site and for two weeks prior thereto) to attend weekly progress meetings; and (f) notify Owner immediately by telephone and confirm in writing within ninety-six (96) hours, if Contractor finds that any item cannot be delivered as required to maintain Owner's progress schedule. Contractor also agrees to be bound by such modifications to the Project schedule as are discussed at the weekly job progress meetings and are contained in the minutes of those meetings unless written objection is made by Contractor within seventy-two (72) hours of the occurrence of such meeting.

7. EXTENSIONS OF TIME: Should Contractor, without any fault or neglect on its own part, be delayed in the completion of the Work by the fault or neglect of Owner, Contractor, as its sole remedy, shall be entitled to a reasonable extension of time only. Should Contractor, without any fault or neglect on its own part, be delayed in the completion of the Work by an act of God or such other cause beyond the control of the Contractor, Contractor shall be entitled to a reasonable extension of time to be determined in accordance with this Contract and the Contract Documents. In no event shall Contractor be entitled to compensation or damages for any delay in the commencement, prosecution, or completion of the Work or for any schedule adjustments resulting therefrom.

Notwithstanding anything to the contrary in the Contract Documents or this Contract, Contractor shall not be entitled to an extension of time unless a written notice of delay shall have been delivered to Owner within ninety-six (96) hours after commencement of the claimed delay.

8. CHANGE ORDERS: Without notice to any surety and without invalidating this Contract, Owner may from time to time, solicit an offer by written order to Contractor to make changes in the Work under the Contract Documents.

Upon request of Owner, and in a timely manner, Contractor shall submit a written offer and proposal for any applicable Price and time adjustment attributable to the changed Work, detailed as Owner may require, supported and conforming to the requirements of the Contract Documents.

Where a change is issued pursuant to a change required by the Owner, the Price shall be adjusted by the net amount of any direct savings and direct cost plus Profit Percentage, attributable to the Change Order, and the time for

performance of the Work may be adjusted according to the Contract Documents, subject, however, in each case to the following limitations: (a) where the Work affected by Change Order is the subject of unit prices under Exhibit C, the Price

adjustment shall be limited to the amounts obtained by applying such unit prices to the actual increase or decrease in the quantity of units due to the change, and (b) the amount allowable for all overhead and profit shall be limited to the product obtained by multiplying the Profit Percentage by the net amount of the Contractor's direct savings and direct cost.

As used in this contract, Contractor's direct savings and direct cost shall mean and be limited to the actual amount of the following: cost of materials, including sales tax and cost of delivery; cost of labor, including social security, old age and unemployment insurance, and fringe benefits required by agreement or custom; worker's compensation insurance; bond premiums if and to the extent actually increased; and actual rent not greater than the rent charged in the locale, or reasonable value of Contractor-owned equipment and machinery.

If the parties are able to agree upon the amount of the Price adjustment and the extent of any time adjustment, such adjustment shall be set forth and memorialized in a Change Order which shall be accepted by Contractor. If the parties are unable to agree upon such adjustments, Owner may elect to issue the Change Order to Contractor directing such work to be performed by Contractor, and any adjustments to Price or time shall be subject to ultimate determination in accordance with this contract; and Contractor shall, nonetheless, proceed immediately with the changed Work. Contractor shall keep a detailed account of the direct savings and direct cost due to the changed Work separately from its other accounting records and shall make such records available to the Owner at Owner's request. Failure to keep adequate and separate cost records of the changed Work, and to furnish same to Owner upon its request, shall constitute an acceptance on Contractor's part of the Owner's determination of the direct savings and direct cost of such changed Work. In no event shall Contractor proceed with changed Work without a Change Order issued pursuant to this paragraph 8 and Owner shall not be liable for any additional costs incurred or delays encountered in the performance of such changed Work without such a written Change Order.

9. NOTICES: All Written notices provided for in this contract or in the Contract Documents shall be deemed given if delivered personally to a responsible representative of the party, sent by telegram, fax with fax acknowledgement, or by regular mail to the party at its address specified herein. Either party may from time to time, by notice to the other as herein provided, designate a different address to which notices to it should be sent.

10. BONDS: If so indicated on page 1 hereof, Contractor shall furnish, within ten (10) days of date of transmission of this contract to Contractor, which is included in the Price, a performance bond and a payment bond, each in an amount equal to the Price, on standard AIA A311 forms and Contractor agrees to notify its surety or sureties of increases in the Price and to take such action as is required to have the penal amount of the bonds furnished pursuant to this paragraph increased correspondingly.

11. INSURANCE: Contractors shall procure and maintain for the duration of the contract, insurance against claims for injuries to persons or damages to property which may arise from or in connection with performance of the work hereunder by the Contractor, his agents, representatives, employees or subcontractors. The cost of such insurance shall be included in the Contractor's bid.

A. MINIMUM LIMITS OF INSURANCE

Contractor shall maintain limits no less than:

1. General Liability: $1,000,000 combined single limit per occurrence for bodily injury, personal injury and property damage including products/completed operations coverage.

2. Automobile Liability: $1,000,000 combined single limit per accident for bodily injury and property damage, when applicable.

3. Workers' Compensation and Employers Liability: Workers' Compensation limits as required by the Labor code of the State of Georgia and Employers Liability limits of $100,000 per accident.

B. DEDUCTIBLES AND SELF-INSURED RETENTION

Any deductibles or self-insured retentions must be declared to and approved by the County. At the option of the County, either: The insurer shall reduce or eliminate such deductibles or self-insured retentions as respects the County, its officers, officials, employees, and volunteers; or the Contractor shall procure a bond guaranteeing payment of losses and related investigations, claim administration and defense expenses.

C. OTHER INSURANCE PROVISIONS

1. General Liability and Automobile Coverages

a. The County, its officers, officials, employees and volunteers are to be covered as insureds as respects: liability arising out of activities performed by or on behalf of the Contractor; products and completed operations of the Contractor; Premises owned, occupied or used by the Contractor; or automobiles owned, leased, hired or borrowed by the Contractor. The coverage shall contain no special limitations on the scope of protection afforded to the County, its officers, officials, employees or volunteers.

b. The Contractor's insurance coverage shall be primary insurance as respects the County, its officers, officials, employees and volunteers, Any insurance or self-insurance maintained by the County, its officers, officials, employees or volunteers shall be excess of the Contractor's insurance and shall not contribute with it.

c. Any failure to comply with reporting provisions of the policies shall not affect coverage provided to the County, its officers, officials, employees or volunteers.

d. The Contractor's insurance shall apply separately to each insured against whom claim is made or suit is brought, except with respect to the limits of the insurer's liability.

2. Workers' Compensation and Employers Liability Coverage

The insurer shall agree to waive all rights of subrogation against the County, its officers, officials, employees and volunteers for losses arising from the work performed by the Contractor for the County.

3. All coverages

Each insurance policy required by this clause shall be endorsed to state that coverage shall not be suspended, voided, canceled by either party, reduced in coverage or in limits except after thirty (30) days' prior written notice by certified mail, return receipt requested, has been given the County.

D. ACCEPTABILITY

Insurance is to be placed with insurers with a Best's rating of no less than A:VII, or otherwise acceptable to County.

E. VERIFICATION OF COVERAGE

Contractor shall furnish the County with certificates of insurance and with original endorsements effecting coverage required by this clause. The certificates and endorsements for each insurance policy are to be signed by a person authorized by that insurer to bind coverage on its behalf. The certificates and endorsements are to be received and approved by the County before work commences as described in the Project Manual. The County reserves the right to require complete, certified copies of all required insurance policies at any time.

F. SUBCONTRACTORS

Contractor shall include all subcontractors as insureds under its policies or shall furnish separate certificates and endorsements for each subcontractor. All coverages for subcontractors shall be subject to all of the requirements stated herein.

12. INDEMNITY: To the full extent permitted by law, Contractor agrees to defend, indemnify and save harmless Owner, and their agents, servants and employees, from and against any claim, cost, expense, or liability (including legal fees, including but not limited to attorney's fees), attributable to bodily injury, sickness, disease, or death, or to damage to or destruction of property (including loss of use thereof), caused by, arising out of, resulting from, or occurring in connection with the performance of the Work by Contractor, its subcontractors and suppliers, or their agents, servants, or employees, whether or not caused in part by the active or passive negligence or other fault of a party indemnified hereunder, to the extent allowed by law; provided, however, Contractor's duty hereunder shall not arise if such injury, sickness, disease, death, damage, or destruction is caused by the sole negligence of a party indemnified hereunder. Contractor's obligation hereunder shall not be limited by the provisions of any worker's compensation or similar act. Contractor hereby agrees that One Hundred Dollars and No/Cents ($100.00) of the Price constitutes the separate consideration for Contractor's indemnity hereunder. Such amount shall be deemed paid out of the first application for payment paid hereunder.

Should any person or entity assert a claim or institute a suit, action, or proceeding against Owner involving the manner or sufficiency of the performance of the Work, Contractor shall upon request of Owner promptly assume the defense of such claim, suit, action or proceeding, at Contractor's expense, and Contractor shall indemnify and save harmless Owner as well as anyone to be defended, indemnified and held harmless by Owner and its or their agents, servants, and

employees, from and against any liability, loss, damage, or expense arising out of or related to such claim, suit, action, or proceeding.

13. ASSIGNMENT: Contractor shall not assign this contract or any monies due or to become due hereunder without the prior written consent of Owner. No assignment by Contractor of any right hereunder shall be effective and any such attempt shall be null and void. No third party shall have any right to enforce any right of Contractor under this contract. If Owner gives written consent to an assignment of this contract, in whole or in part, Contractor shall not be relieved of its duties and obligations hereunder and shall be and remain fully responsible and liable for the acts and omissions of its assignees. Nothing herein shall prevent Contractor from engaging subcontractors to perform a portion of the Work hereunder. However, Contractor shall be and remain as fully responsible for all persons directly or indirectly employed by such subcontractors, as Contractor is for its own acts and omissions and those of its agents, servants, and employees. Additionally, nothing herein shall prevent any guarantor or surety of Contractor from enforcing any right hereunder after acknowledgement of its obligation as guarantor or surety. Any attempted enforcement of such rights in the absence of an express acknowledgement shall constitute an admission by any guarantor or surety of its obligations under its agreement of guarantee or suretyship.

14. COMPLIANCE: Contractor shall, at its own expense, obtain all necessary licenses and permits pertaining to the Work and comply with all statutes, ordinances, rules, regulations and orders of any governmental or quasi-governmental authority having jurisdiction over the Work or the performance thereof, including, but not limited to, those relating to safety, wages, discrimination and equal employment opportunity. Contractor shall promptly correct any violations of such statutes, ordinances, rules, regulations and orders committed by Contractor, its agents, servants and employees; and Contractor shall receive and respond to, and shall defend, indemnify and save harmless Owner, as well as anyone to whom Owner is obligated, and their agents, servants and employees from and against any loss, liability, or expense arising from, any such violations and any citations, assessments, fines, or penalties resulting therefrom.

15. SAFETY: Contractor agrees that the prevention of accidents to persons engaged upon or in the vicinity of the Work is its responsibility. Contractor shall establish and implement safety measures, policies and standards conforming to those required or recommended by governmental or quasi-governmental authorities having jurisdiction.

16. CLEANING UP: Contractor shall, at its own expense: (a) keep the premises at all times free from waste materials, packaging and other debris accumulated in connection with the Work by collecting and removing such debris from the job site on a daily or other basis requested by Owner; (b) at the completion of the Work in each area, sweep and otherwise make the Work in its immediate vicinity "broom-clean;" (c) remove all of its tools, equipment, scaffolds, temporary structures and surplus materials as directed by Owner at the completion of the Work; and (d) at final inspection clean and prepare the Work for acceptance by Owner. Contractor agrees to provide all cleaning and cleanup required under the Contract Documents pertaining to the Work to the extent such requirements are in excess of those contained in this paragraph.

17. TEMPORARY FACILITIES: All temporary site facilities, such as storage, sheds, water, heat, light, power, toilets, hoists, elevators, scaffolding, cold weather protection, ventilating, pumps, watchman service, etc., required in performing the Work shall be furnished by Contractor.

18. QUALITY: Contractor shall at all times provide first-quality, new materials (unless otherwise specified in the Contract Documents) and workmanship conforming to the Contract requirements. Contractor shall at all times provide proper facilities and an opportunity for the inspection of the Work by Architect and Owner and their representatives. Contractor shall, within forty-eight (48) hours after receiving written notice from Owner, proceed to take down and remove all portions of the Work which Owner shall have condemned as unsound, improper, or in any way failing to conform to the Contract Documents or this Contract and shall replace the same with proper and satisfactory Work and make good all work damaged or destroyed thereby. Owner's failure to discover or notify Contractor of defective or nonconforming Work at the time the Work, or any portion thereof, is performed or completed shall not relieve Contractor of full responsibility for replacement of the defective or nonconforming Work and all damages resulting therefrom.

19. GUARANTEES: Contractor warrants and guarantees the Work to the full extent provided for in and required by the Contract Documents. Without limiting the foregoing or any other liability or obligation with respect to the Work, Contractor shall, at its expense and by reason of its express warranty, make good any faulty, defective, or improper parts of the Work discovered within one year from the date of acceptance of the Project by the Architect and Owner or within such longer period as may be provided in the Contract Documents. Contractor warrants that all materials furnished hereunder meet the requirements of the Contract Documents and impliedly warrants that they are both merchantable and fit for the purposes for which they are to be used under the Contract Documents.

20. SUBMITTALS: Contractor shall immediately prepare or obtain and promptly submit to Owner shop and erection drawings, samples, product data, catalogue cuts, laboratory and inspection reports and engineering calculations, all

as may be required by the Contract Documents or as may be necessary or appropriate to describe the details of the Work. Approval of drawings or other submittals by Owner or Architect shall not relieve Contractor of its obligation to perform the

Work in strict accordance with the Contract Documents or its responsibility for proper matching of the Work to contiguous work.

21. LIENS: Contractor shall defend, indemnify and save harmless Owner from any lien or claim of lien filed or maintained by any laborer, materialman, subcontractor, or other person or entity directly or indirectly acting for, through, or under Contractor, against the Project or any part thereof or any interest therein or against any monies due or to become due from Owner to Contractor. Without limiting the foregoing, Contractor shall cause any such lien or claim of lien to be satisfied, removed, or discharged by bond, payment, or otherwise within such time as provided under the Contract Documents or ten (10) days from the date of receipt by the Owner, whichever is shorter.

22. PATENTS: Contractor shall defend, indemnify and save harmless Owner, from and against any claim, cost, expense, or liability (including attorneys' fees) arising out of or resulting from infringement or alleged infringement of any patent rights attributable to the Work.

23. LABOR: Contractor agrees that where its Work is stopped, delayed, or interfered with by strikes, slow-downs, or similar interruptions or disturbances (including cases where the Contractors employees are engaged in a work-stoppage solely as a result of a labor dispute involving Owner or others and not in any manner involving Contractor,) Owner shall have the rights and remedies provided for herein. Contractor shall maintain and exercise control over all employees engaged in the performance of the Work, and Contractor shall, to the extent permitted by law, remove or cause to be removed from the Project any employee whose presence is detrimental to the orderly prosecution of the Work. Contractor shall take all necessary steps to restrain and enjoin any illegal picketing, demonstrating, violence, or similar activity against the Contractor at the Project.

24. DAMAGE: Owner shall not be liable or responsible for loss or damage to the equipment, tools, facilities, or other personal property owned, rented, or used by Contractor, or anyone employed by or through Contractor, in the performance of the Work; and Contractor shall maintain such insurance and take such protective action as Contractor deems desirable with respect to such property. Owner shall not be liable or responsible for any loss or damage to the Work, and Contractor shall be responsible for the correction or restoration of any such loss or damage to the Work, or to the work of Owner or any other contractor, resulting from the operations of Contractor, or its subcontractors, agents, servants, or employees hereunder. Contractor shall take all reasonable precautions to protect the Work from loss or damage prior to acceptance by Owner.

25. DEFAULT: Should Contractor at any time: (a) fail to supply the labor, materials, equipment, supervision and other things required of it in sufficient quantities and of required quality to perform the Work with the skill, conformity, promptness and diligence required hereunder; (b) cause interference, stoppage, or delay to the Project or any activity necessary to complete the Project; (c) become insolvent; or (d) fail in the performance or observance of any of the covenants, conditions, or other terms of this Contract, then in any such event, each of which shall constitute a default hereunder by Contractor, Owner shall, after giving Contractor notice of default and seventy-two (72) hours within which to cure, have the right to exercise any one or more of the following remedies:

(i) require that Contractor utilize, at its own expense, overtime labor (including Saturday and Sunday work) and additional shifts as necessary to overcome the consequences of any delay attributable to Contractor's default;

(ii) attempt to remedy the default by whatever means Owner may deem necessary or appropriate, including, but not limited to, correcting, furnishing, performing, or otherwise completing the Work, or any part thereof, by itself or through others (utilizing where appropriate any materials and equipment previously purchased for that purpose by Contractor) and deducting the cost thereof (plus an allowance for administrative burden equal to fifteen percent (15%) of such costs) from any monies due or to become due to Contractor hereunder;

(iii) after giving Contractor an additional seventy-two (72) hours notice (at any time following the expiration of the initial seventy-two (72) hour notice and curative period), terminate the Contract, without thereby waiving or releasing any rights or remedies against Contractor or its sureties, and by itself or through others take possession of the Work, and all materials, equipment, facilities, plant, tools, scaffolds and appliances of Contractor related to the Work, for purposes of completing the Work and securing to Owner the payment of its costs (plus an allowance for administrative burden equal to fifteen percent (15%) of such costs) and other damages under the Contract and for the breach thereof, it being intended that Owner shall, for the stated purposes, be the assignee of and have a security interest in the property described above to the extent located on the Project site; or

(iv) call upon the surety, if applicable, to perform in accordance with the performance bond.

(v) recover from Contractor all losses, damages, penalties and fines, whether actual or liquidated, direct or consequential (including without limitation any increase in Owner's cost of insurance resulting from Contractor's failure to maintain insurance coverages required hereunder), and all reasonable attorneys' fees suffered or incurred by Owner by reason of or as a result of Contractor's default.

After completion of the Work by the exercise of any one or more of the above remedies and acceptance of the Work by Owner, Owner shall promptly pay Contractor any undisbursed balance of the Price, if any. If the cost of completion

of the Work plus the allowance for administrative burden, together with any other damages or losses sustained or incurred by Owner, shall exceed the undisbursed balance of the Price, Contractor and its guarantors, surety, or sureties shall pay the difference within fifteen (15) days of written demand from Owner.

The foregoing remedies shall be considered separate and cumulative and shall be in addition to every other remedy given hereunder or under the Contract Documents, or now or hereafter existing at law or in equity. Contractor's guarantors, surety, or sureties agree to be bound to Owner with respect to such remedies notwithstanding any provision of the bonds as described herein.

Except as limited by this Contract, Contractor shall have the rights and remedies available at law or in equity for a breach of this Contract by Owner. Any default shall be deemed waived unless Contractor shall have given Owner written notice thereof within five (5) days after the occurrence of such default. Contractor shall not be entitled to stop the Work or terminate this Contract on account of Owner's failure to pay an amount claimed due hereunder (including payment for claimed changed Work) so long as Contractor shall not have adequately substantiated the amount due or so long as a good faith dispute exists as to the amount due. Contractor shall not be entitled to stop the Work on account of a default by Owner unless such default shall have continued for more than ten (10) days after Owner's receipt of written notice of such default from Contractor, specifying in detail the nature of the default and the steps necessary to cure the claimed default.

Contractor shall not be entitled to terminate this Contract except for a substantial and material breach by Owner which shall have continued, uncured, for at least an additional thirty (30) days after (a) Contractor shall have stopped working in accordance with this paragraph and (b) Owner shall have received thirty (30) days written notice of Contractor's intention to terminate this Contract.

Should any termination for default under paragraph 25 (iii) be determined to be invalid, improper or wrongful, such termination shall be deemed to have been a termination for convenience as provided in paragraph 27 below.

26. DISPUTES: If a dispute should arise between Owner and Contractor under or related to the Contract, or the breach thereof, then either party may seek redress of its grievances as to such disputes at law or in equity or by arbitration if both parties agree after default or breech to arbitrate. The award rendered by arbitrators shall not be final or binding. Contractor agrees to continue to perform its Work despite the existence of disputes. The existence of a dispute shall not be grounds for any failure to perform by Contractor nor limit the right of Owner to proceed, in good faith, to remedy any default by Contractor.

27. EARLY TERMINATION: Should this Contract be terminated based on default, Contractor shall assign all purchase orders and subcontracts to Owner if Owner, in its sole discretion, requests such assignments. Contractor agrees to incorporate such provisions in its agreements with suppliers and subcontractors to effectuate this provision. Nothing herein shall create any duty on the part of Owner to accept the assignment of any purchase order or subcontract hereunder.

Further, in its sole discretion and without notice to any guarantors, surety, or sureties, Owner may terminate this Contract for its convenience upon the giving of written notice to Contractor. In no event shall Contractor be entitled to consequential damages or loss of profits on portions of the Work not yet performed. If terminated for convenience, Contractor shall be entitled to be paid all costs of all Work provided hereunder including reasonable and necessary costs of termination, as determined in accordance with the method set forth in paragraph 8 above, together with the Profit Percentage attributable to the costs so determined. Payment shall abe made in accordance with and subject to the requirements of paragraph 4.

28. SETOFF: If Contractor is, or hereafter begins, performing any other work for Owner other than the Work under this Contract and the unpaid balance of the Price becomes insufficient to complete such Work or compensate Owner for any damages or deficiencies by the Contractor in the performance of the other work, Contractor hereby consents and agrees to allow Owner, in its sole discretion and judgement, to setoff any of Owner's claims against any funds due, or which may become due, Contractor under any other agreement with Owner, or any contract on any other project. No refusal or failure of Owner to exercise its rights hereunder shall constitute the basis of any right or claim against Owner.

29. MISCELLANEOUS: (a) All matters relating to the validity, performance, or interpretation of this Contract shall be governed by the laws of the State of Georgia, performance, or interpretation, as the case may be, of the Contract. This Contract is entered into in Cobb County and all services under this Contract are capable of being performed and are to be performed in Cobb County, Georgia. Therefore, the parties agree that Cobb County is the proper venue for the resolution of any disputes.

(b) This Contract, including the documents incorporated herein by reference, embodies the entire agreement of the parties and supersedes all prior negotiations, agreements, and understandings related to the subject matter hereof.

(c) This Contract may not be changed in any way except as herein provided or by a writing signed by a duly authorized officer or agent of each party, No requirement of this Contract may be waived except in writing signed by a duly authorized officer of the waiving party.

(d) The provisions of this Contract and the Contract Documents are intended to supplement and complement each other. If, however, any provision of this Contract irreconcilably conflicts with a provision of the Contract Documents, the provision imposing the greater duty on the Contractor shall govern.

(e) Where the context requires, neuter terms used herein shall include the masculine and feminine, and singular terms shall include the plural, and vice versa.

SCHEDULE A - WORK: Pursuant to paragraph 1 of this Contract, Contractor shall prosecute and complete the following Work:

All work per the Contract Documents

SCHEDULE B - CONTRACT DOCUMENTS: The Contract Documents referred to in paragraph 1 and elsewhere in this Contract consist of the Contract and the following:

Project Manual including all portions as described in the Table of Contents

All Addendums issued by the Owner prior to receipt of bids

Contractor's Bid Form

Owner's Purchase Order

SCHEDULE C - SUPPLEMENTAL PRICE SCHEDULE:

UNIT PRICES: Pursuant to paragraphs 2 and 8 of this Contract, the following unit prices shall be used in determining the Price and any adjustments thereto, without limitation unless expressly provided herein:

N/A

ALLOWANCES: The price specified on page 1 of the Contract includes the following allowances for the parts of the Work specified below, to be furnished by Contractor in accordance with the Contract Documents:

N/A

SCHEDULE D - PERFORMANCE SCHEDULE: Pursuant to paragraph 6 of this Contract and without limiting the provisions thereof, Contractor shall perform the Work and its several parts according to the following specific schedule, and as the same may be revised from time to time by Owner:

Time is of the essence is repeated for emphasis.

Contractor to complete all portions of the contract work within the calendar day period described in the Specifications portion of the Project Manual. The start date is established as the date the successful Bidder receives the executed Purchase Order from the Owner.

BID FORM

Request for Proposals
Design/Build
Phase II of Powder Springs Senior Center
Cobb County Property Management Department
Sealed Bid #12-5622

DESIGN FEES $_____

GENERAL CONDITIONS $_____.

GENERAL CONTRCTOR FEES $_____.

TOTAL BID PRICE:
_____DOLLARS ($_____)

_____
Company name

_____
Signature and date

The undersigned understands and agrees also to comply with and be bound by the entire contents of the Request for Proposal including all Addenda.

Acknowledged:_____

The undersigned acknowledges receipt of Addenda numbers:

ADDENDUM NO. _____ Acknowledged: _____

ADDENDUM NO. _____ Acknowledged: _____

ADDENDUM NO. _____ Acknowledged: _____

ADDENDUM NO. _____ Acknowledged: _____

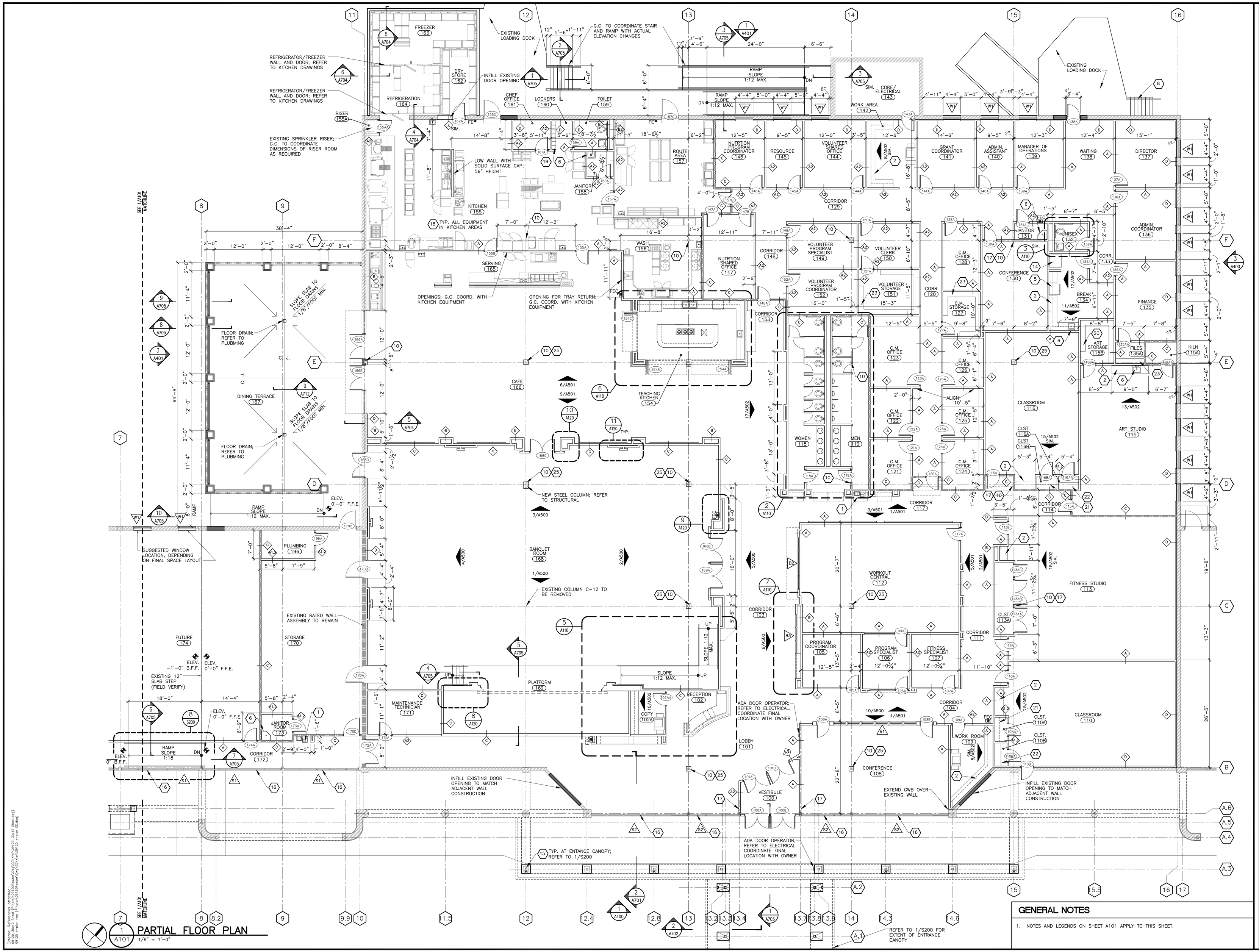

1 A101 PARTIAL FLOOR PLAN
1/8" = 1'-0"

GENERAL NOTES

1. NOTES AND LEGENDS ON SHEET A101 APPLY TO THIS SHEET.

RELEASED FOR PERMITTING

© 2011 SIZEMORE GROUP

STATE OF GEORGIA WILLIAM A. SIZEMORE, JR. REGISTERED ARCHITECT

Drawn: AG
Checked: MT
Date: 1/5/11
Job No.: 09120POWDER

Revisions:

No.	Date

POWDER SPRINGS STATION RENOVATION – SENIOR CENTER
1150 POWDER SPRINGS STREET – MARIETTA, GEORGIA 30060

THE DRAWING IS AN INSTRUMENT OF SERVICE AND IS THE PROPERTY OF THE ARCHITECT AND MUST BE RETURNED UPON REQUEST. THE DRAWING MAY NOT BE REPRODUCED OR USED FOR OTHER PROJECTS OR FOR ADDITIONS TO THIS PROJECT WITHOUT THE WRITTEN PERMISSION OF THE ARCHITECT.

sizemoregroup

Title: PARTIAL FLOOR PLAN

Scale: AS NOTED

Sheet: A100

of:

External References attached:
09120 x-plan xref [P:\pro\09120Powder\Dwg\CD\xref\09120_30x42 Sheet.dwg]
09120 x-plan new [P:\pro\09120Powder\Dwg\CD\xref\09120 x-plan CD.dwg]

Filename: P:\proj\09120Powder\Dwg\CD\09120 A100 FLOOR PLAN.dwg

Date of plot: Jan 14, 2011 – 4:47pm

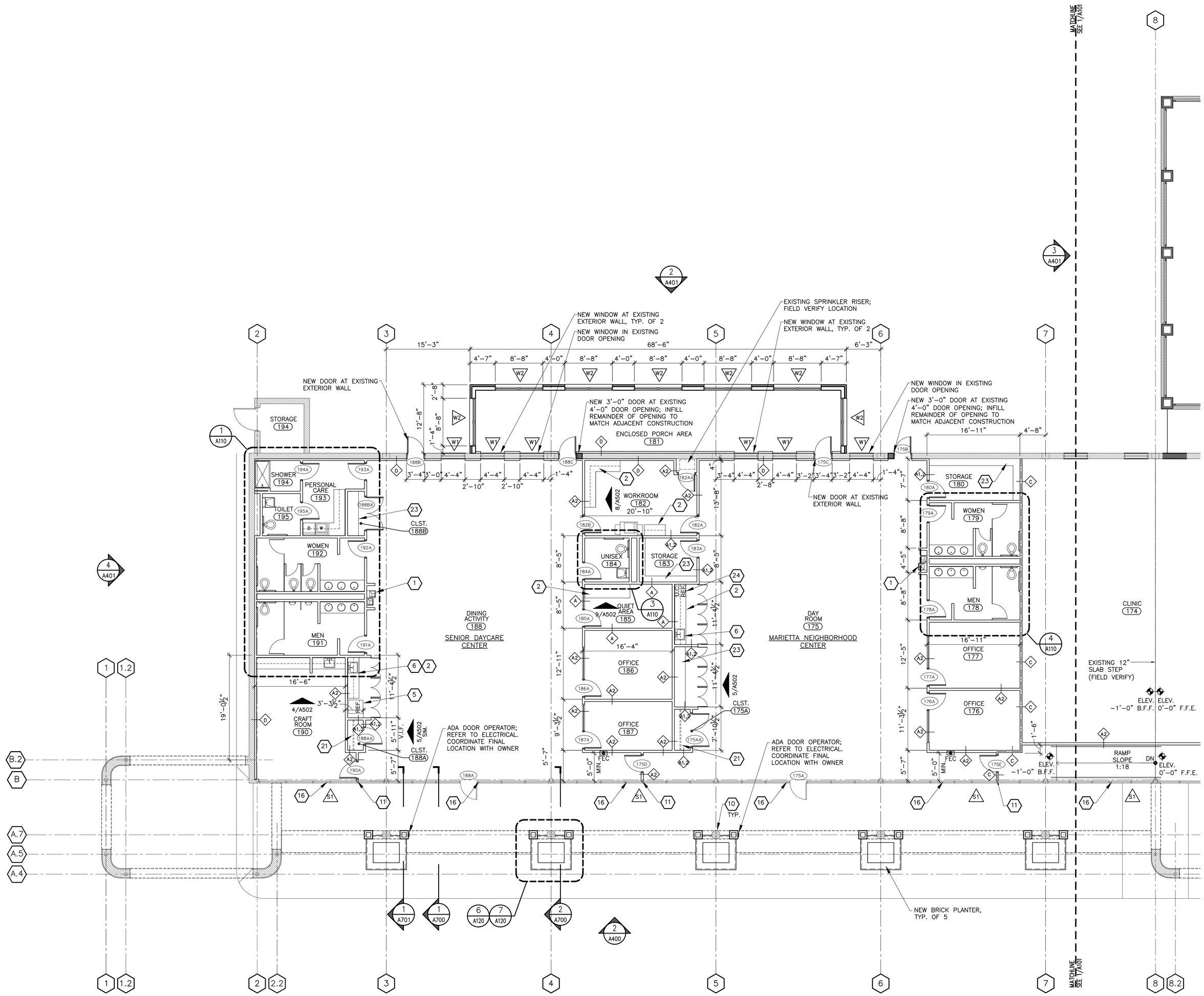

1 A101 PARTIAL FLOOR PLAN
1/8" = 1'-0"

GENERAL NOTES

1. ALL PARTITIONS SHOWN AS 3-5/8" METAL STUDS U.N.O.. GENERAL CONTRACTOR SHALL COORDINATE ACTUAL SIZE, GAUGE, AND SPACING OF METAL STUDS FOR ALL INTERIOR AND EXTERIOR CONDITIONS.
2. ALL FURNITURE BY OTHERS; NOT IN CONTRACT (N.I.C.) UNLESS NOTED OTHERWISE.
3. ALL GYPSUM BOARD TO BE USED ON NEW CONSTRUCTION TO BE 5/8" THICK. PROVIDE CORNER REINFORCEMENT AT EXPOSED OUTSIDE CORNERS.
4. PROVIDE SOLID F.T. WOOD BLOCKING INSIDE PARTITIONS FOR SECURING WALL HUNG CABINETS/MILLWORK, SHELVING AND WALL HUNG ACCESSORIES.
5. ALL DRYWALL FINISH WORK TO BE FINISH LEVEL 4 UNO.
6. UNLESS NOTED OTHERWISE, ALL INTERIOR PARTITIONS TO BE FULL HEIGHT TYPE A TO UNDERSIDE OF STRUCTURE AND SHALL HAVE ACOUSTICAL SOUND BATTS.
7. CONTRACTOR SHALL CHECK AND VERIFY ALL DIMENSIONS AND JOB CONDITIONS AT THE SITE, REPORTING IMMEDIATELY ALL DISCREPANCIES BETWEEN THE JOB AND DRAWINGS TO THE ARCHITECT.
8. GC TO PROVIDE COLD FORMED METAL FRAMING SHOP DRAWINGS FOR EXTERIOR WALLS, PLATFORMS AND RAMPS.
9. ALL ANGLES ARE 90 DEGREES UNLESS NOTED OTHERWISE.
10. WHEN DIFFERENT PARTITIONS TYPES ARE LOCATED ADJACENT TO ONE ANOTHER. THE FINISHED FACES OF THE PARTITIONS SHALL BE ALIGNED AND FLUSH U.N.O.
11. REVIEW OF SUBMITTALS AND/OR SHOP DRAWINGS BY THE ARCHITECT/ENGINEER DOES NOT RELIEVE THE CONTRACTOR OF THE RESPONSIBILITY TO REVIEW AND CHECK SHOP DRAWINGS BEFORE SUBMITTAL TO THE STRUCTURAL ENGINEER. ALL SUBMITTALS MUST BE REVIEWED AND STAMPED BY THE CONTRACTOR PRIOR TO SUBMISSION. THE CONTRACTOR REMAINS SOLELY RESPONSIBLE FOR ERRORS AND OMISSIONS ASSOCIATED WITH THE PREPARATION OF SHOP DRAWINGS AS THEY PERTAIN TO MEMBER SIZES, DETAILS AND DIMENSIONS SPECIFIED IN THE CONTRACT DOCUMENTS. DO NOT BEGIN FABRICATION UNTIL SHOP DRAWINGS ARE APPROVED.
12. DO NOT MAKE SHOP DRAWINGS USING REPRODUCTIONS OF, OR MAKING REFERENCE TO, CONTRACT DRAWINGS.
13. REFER TO FINISH PLANS AND INTERIOR ELEVATIONS FOR INTERIOR FINISHES.
14. ALL DIMENSIONS ARE TO FACE OF STUD OR EDGE OF OPENING UNLESS NOTED OTHERWISE.
15. LOCATE EDGE OF DOOR OPENINGS 6" FROM INSIDE FACE OF ADJACENT PARTITION UNLESS NOTED OTHERWISE. MAINTAIN MIN. 18" CLEAR ON PULL SIDE OF ALL DOORS AND H.C. TOILET PARTITIONS.
16. PROVIDE AND INSTALL INTERIOR SIGNAGE FOR ALL ROOMS/SPACES; PER CODE AND TO MEET OWNER'S EXISTING STANDARDS. TWO DIRECTORIES SHALL ALSO BE PROVIDED AND INSTALLED (PER FLOOR); PROVIDE SHOP DRAWINGS AND COORDINATE ALL LOCATIONS WITH ARCHITECT.
17. PROVIDE FIRE EXTINGUISHERS AND SEMI-RECESSED FIRE EXTINGUISHERS CABINETS (NUMBER AND QUANTITY TO MEET CODE BASED ON USE AND 75 FOOT TRAVEL DISTANCE). REFER TO LIFE SAFETY PLANS FOR LOCATIONS.
18. ALL DRAWINGS AND DETAILS INCORPORATING EXISTING CONDITIONS ARE REPRESENTATIVE OF EXISTING CONDITIONS ONLY. THE CONTRACTOR SHALL VERIFY THE ACCURACY OF ALL DETAILS WITH ACTUAL CONDITIONS AND COORDINATE WITH THE ARCHITECT ANY DEVIATIONS TO EXECUTE THE INTENT OF THE DETAILS.
19. REFER TO EXTERIOR ELEVATIONS FOR NOTES ON EXTERIOR CONSTRUCTION.
20. REPAIR ASPHALT/CONCRETE PAVING AS REQUIRED FOR NEW CONSTRUCTION, INCLUDING INSTALLATION OF GREASE TRAP.

KEYED NOTES

1. HI-LO ELECTRIC WATER COOLERS; REFER TO PLUMBING AND ELECTRICAL
2. MILLWORK; REFER TO FINISH PLANS AND ELEVATIONS
3. RESIDENTIAL WASHING MACHINE; REFER TO ELECTRICAL AND PLUMBING. SELECTION BY OWNER, G.C. TO COORDINATE.
4. RESIDENTIAL DRYER; REFER TO ELECTRICAL AND MECHANICAL. SELECTION BY OWNER, G.C. TO COORDINATE.
5. RESIDENTIAL REFRIGERATOR; REFER TO ELECTRICAL AND PLUMBING. SELECTION BY OWNER, G.C. TO COORDINATE.
6. SINK; REFER TO PLUMBING. REFER TO KITCHEN DRAWINGS AT KITCHEN AREA.
7. 1-1/2" O.D. STEEL PIPE HANDRAILS AT 2'-10" HEIGHT; PAINT.
8. EXISTING STEPS/RAILING TO REMAIN; PREPARE SURFACE AND PAINT ALL EXPOSED METAL.
9. CURTAIN; BY OWNER, N.I.C.. REFER TO STRUCTURAL DETAIL 12/S300 FOR REINFORCING AT EXISTING BAR JOISTS TO SUPPORT FUTURE CURTAIN.
10. EXISTING STEEL COLUMN TO REMAIN
11. ALIGN NEW PARTITION WITH EXISTING MULLION/JAMB
12. ALIGN NEW PARTITION FINISH WITH FINISH OF EXISTING CONSTRUCTION
13. EXISTING DOOR TO REMAIN
14. VENDING MACHINE, N.I.C.
15. NEW STEEL COLUMN; REFER TO STRUCTURAL
16. EXISTING ALUMINUM STOREFRONT SYSTEM TO BE REPLACED; G.C. TO COORDINATE DIMENSIONS/SHOP DRAWINGS
17. ALIGN NEW PARTITION WITH CENTERLINE OF COLUMN
18. KITCHEN EQUIPMENT; REFER TO KITCHEN DRAWINGS, PLUMBING, MECHANICAL AND ELECTRICAL.
19. LOCKERS; SELECTION BY OWNER; G.C. TO COORDINATE.
20. 18" DEPTH VINYL COATED WIRE SHELVING
21. PLASTIC LAMINATE ON 3/4" PLYWOOD SHELF WITH METAL COAT HANGER ROD; ELEVATION AT 6'-8"
22. NOT USED
23. 18" DEPTH ADJUSTABLE SHELVING ON HEAVY DUTY BRACKETS AND STANDARDS; REFER TO 14/A502
24. UNDER COUNTER REFRIGERATOR; REFER TO ELECTRICAL. SELECTION BY OWNER, G.C. TO COORDINATE.
25. FURR OUT EXISTING STEEL COLUMN WITH 5/8" GYPSUM BOARD ON 3-5/8" METAL STUDS; SIMILAR TO PARTITION TYPE '8'.

PARTITION LEGEND

- EXISTING CONSTRUCTION TO REMAIN
- NEW METAL STUD PARTITION
- NEW CMU WALL; REFER TO STRUCTURAL
- NEW CONCRETE WALL; REFER TO STRUCTURAL
- INFILL TO MATCH EXISTING CONSTRUCTION

1. REFER TO SHEET A001 FOR PARTITION TYPES.

RELEASED FOR PERMITTING

© 2011 SIZEMORE GROUP

STATE OF GEORGIA WILLIAM TODD SIZEMORE REGISTERED ARCHITECT

Drawn: AG
Checked: MT
Date: 1/5/11
Job No.: 09120POWDER

Revisions:

No.	Date

POWDER SPRINGS STATION RENOVATION – SENIOR CENTER
1150 POWDER SPRINGS STREET – MARIETTA, GEORGIA 30060

THIS DRAWING IS AN INSTRUMENT OF SERVICE PROVIDED BY AND REMAINS THE PROPERTY OF SIZEMORE GROUP. IT MAY NOT BE USED OR REPRODUCED OR TRANSMITTED IN ANY FORM OR BY ANY MEANS, ELECTRONIC OR MECHANICAL, FOR ANY PURPOSE WITHOUT THE WRITTEN PERMISSION OF THE SIZEMORE GROUP.

sizemoregroup

Title: PARTIAL FLOOR PLAN

Scale: AS NOTED

Sheet: A101

of:

External References attached:
09120 x-plan xref [P:\proj\09120Powder\Dwg\CD\Xref\09120_20x42 Sheet.dwg]
09120 x-plan xref [P:\proj\09120Powder\Dwg\CD\Xref\09120 x-plan CD.dwg]

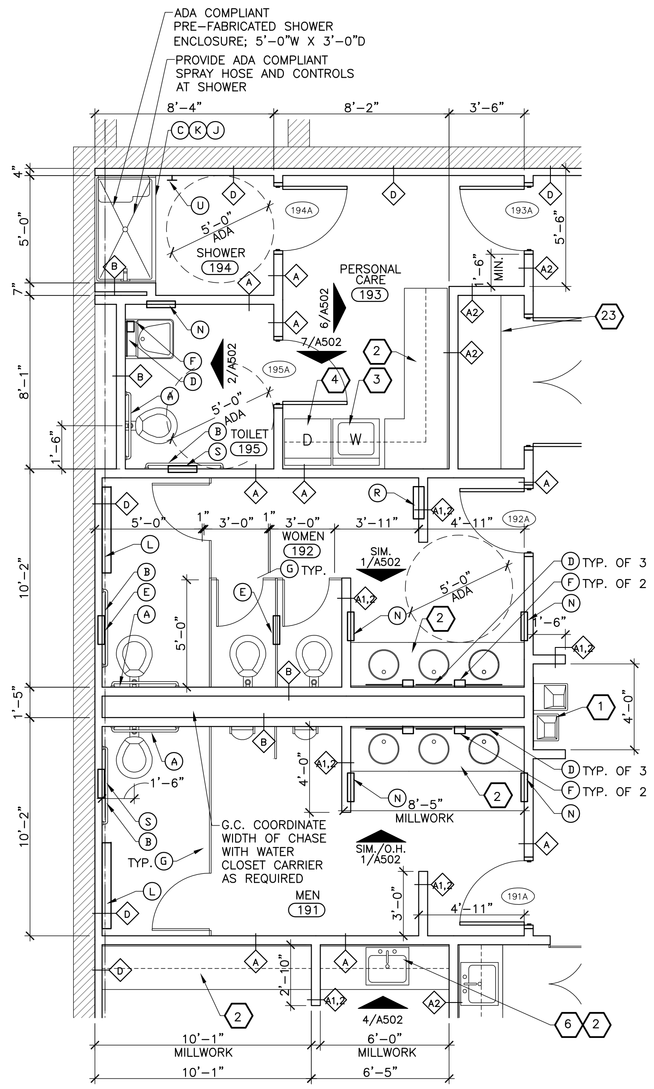

1 A110 ENLARGED PLAN
1/4" = 1'-0"
REFER TO PLUMBING FOR FLOOR DRAIN LOCATIONS

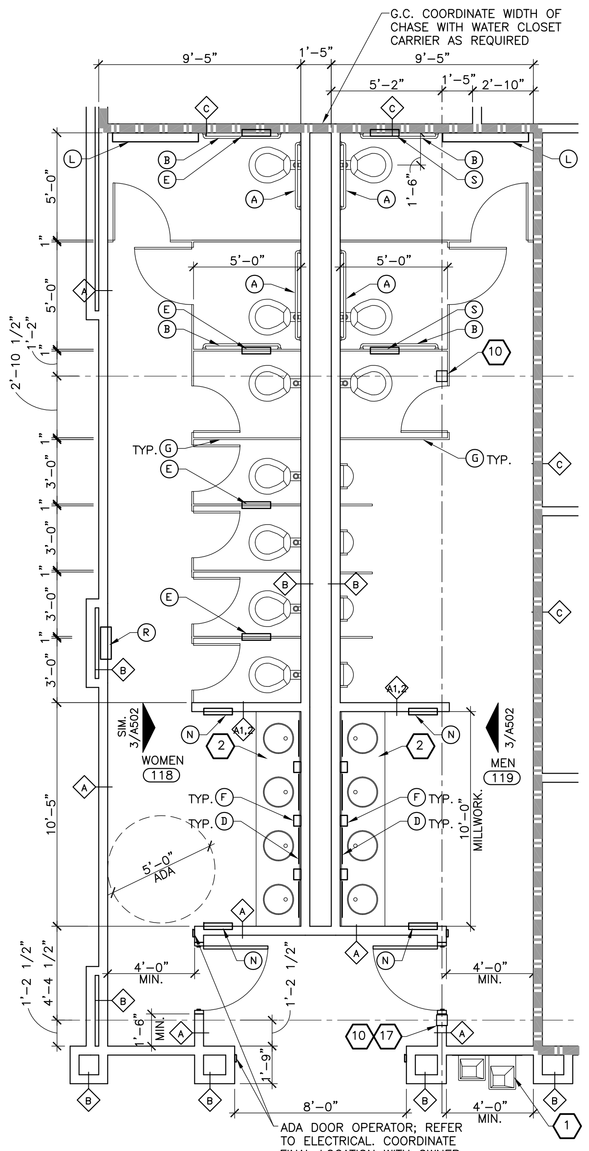

2 A110 ENLARGED PLAN
1/4" = 1'-0"
REFER TO 1/A501 FOR REMAINDER OF DIMENSIONS AT CORRIDOR WALLS

REFER TO PLUMBING FOR FLOOR DRAIN LOCATIONS

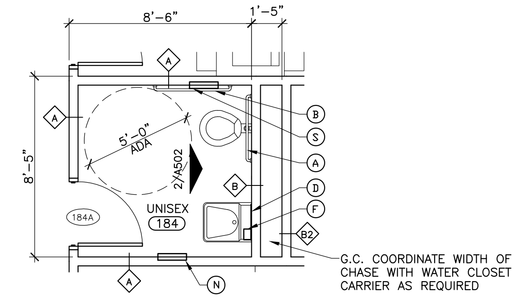

3 A110 ENLARGED PLAN
1/4" = 1'-0"

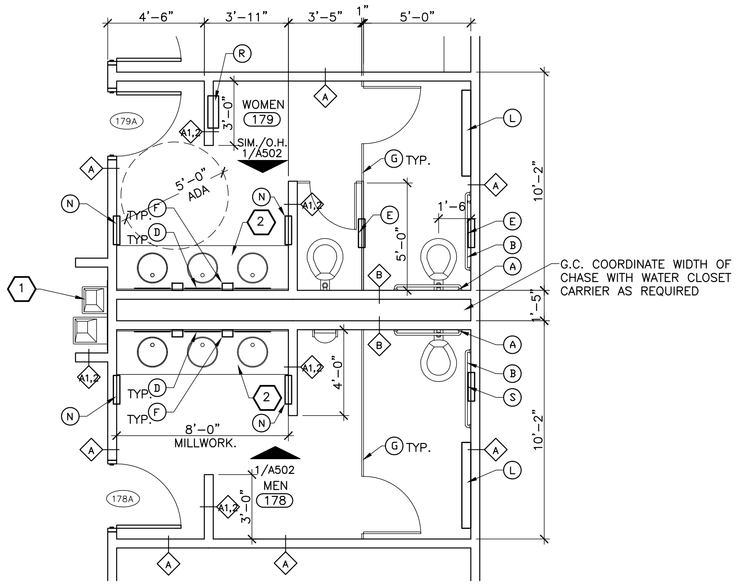

4 A110 ENLARGED PLAN
1/4" = 1'-0"
REFER TO PLUMBING FOR FLOOR DRAIN LOCATIONS

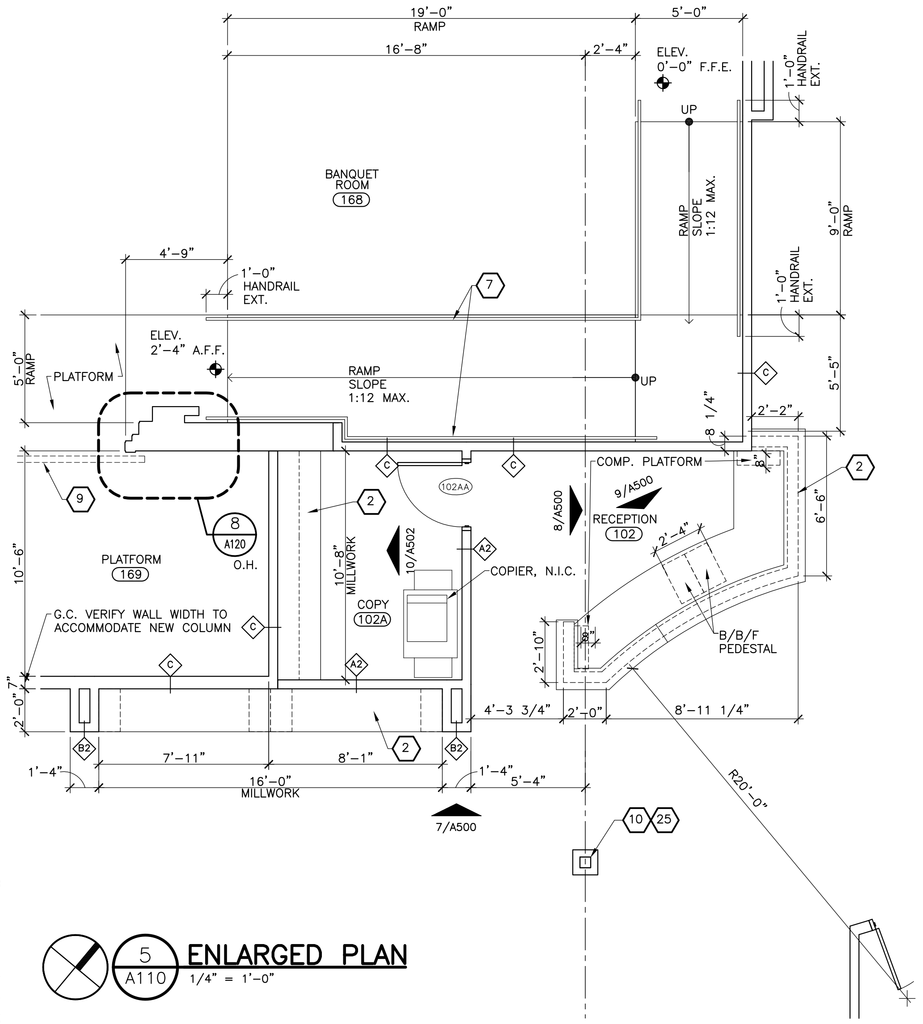

5 A110 ENLARGED PLAN
1/4" = 1'-0"

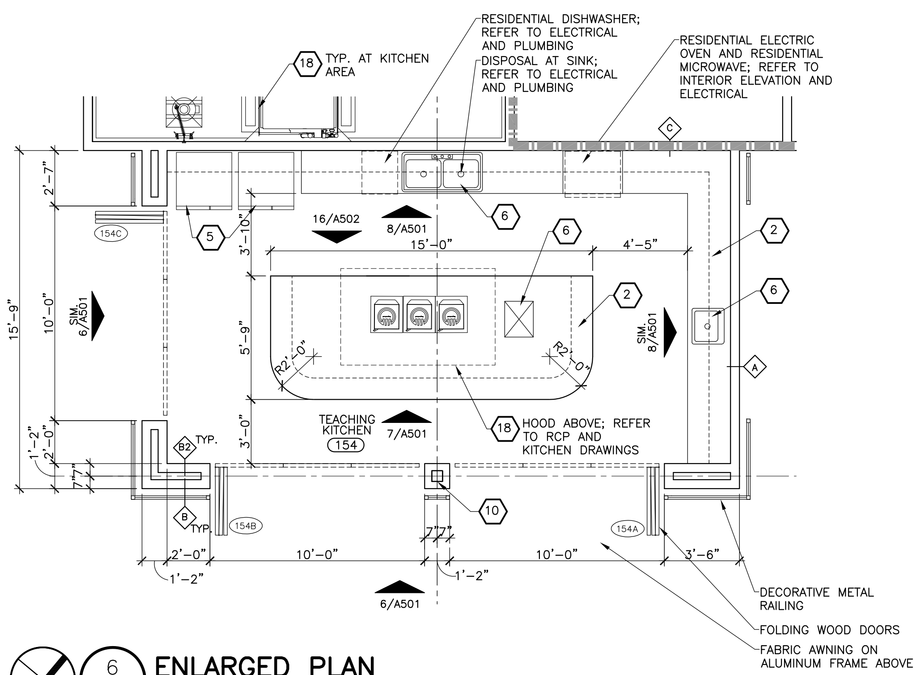

6 A110 ENLARGED PLAN
1/4" = 1'-0"

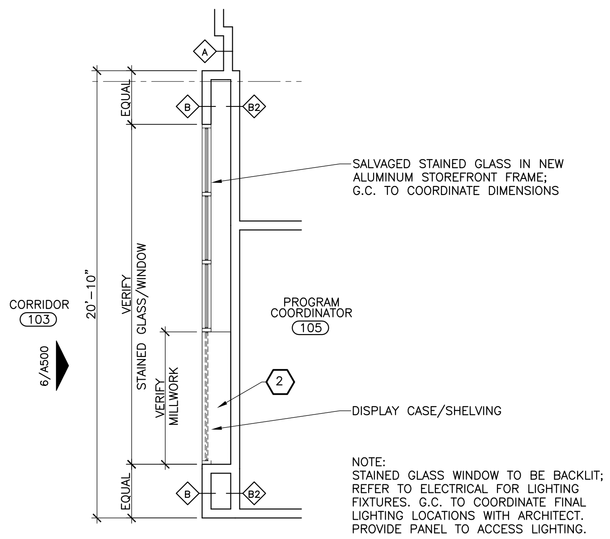

7 A110 ENLARGED PLAN
1/4" = 1'-0"

GENERAL NOTES

1. ALL PARTITIONS SHOWN AS 3-5/8" METAL STUDS U.N.O.. GENERAL CONTRACTOR SHALL COORDINATE ACTUAL SIZE, GAUGE, AND SPACING OF METAL STUDS FOR ALL INTERIOR AND EXTERIOR CONDITIONS.
2. ALL FURNITURE BY OTHERS; NOT IN CONTRACT (N.I.C.) UNLESS NOTED OTHERWISE.
3. ALL GYPSUM BOARD TO BE USED ON NEW CONSTRUCTION TO BE 5/8" THICK. PROVIDE CORNER REINFORCEMENT AT EXPOSED OUTSIDE CORNERS.
4. PROVIDE SOLID WOOD BLOCKING INSIDE PARTITIONS FOR SECURING WALL HUNG CABINETS/MILLWORK, SHELVING AND WALL HUNG ACCESSORIES.
5. ALL DRYWALL FINISH WORK TO BE FINISH LEVEL 4 UNO.
6. UNLESS NOTED OTHERWISE, ALL INTERIOR PARTITIONS TO BE FULL HEIGHT TYPE A TO UNDERSIDE OF STRUCTURE. ALL INTERIOR PARTITIONS SHALL HAVE ACOUSTICAL SOUND BATTS.
7. CONTRACTOR SHALL CHECK AND VERIFY ALL DIMENSIONS AND JOB CONDITIONS AT THE SITE, REPORTING IMMEDIATELY ALL DISCREPANCIES BETWEEN THE JOB AND DRAWINGS TO THE ARCHITECT.
8. GC TO PROVIDE COLD FORMED METAL FRAMING SHOP DRAWINGS FOR EXTERIOR WALLS.
9. ALL ANGLES ARE 90 DEGREES UNLESS NOTED OTHERWISE.
10. WHEN DIFFERENT PARTITIONS TYPES ARE LOCATED ADJACENT TO ONE ANOTHER. THE FINISHED FACES OF THE PARTITIONS SHALL BE ALIGNED AND FLUSH U.N.O.
11. REVIEW OF SUBMITTALS AND/OR SHOP DRAWINGS BY THE ARCHITECT/ENGINEER DOES NOT RELIEVE THE CONTRACTOR OF THE RESPONSIBILITY TO REVIEW AND CHECK SHOP DRAWINGS BEFORE SUBMITTAL TO THE STRUCTURAL ENGINEER. ALL SUBMITTALS MUST BE REVIEWED AND STAMPED BY THE CONTRACTOR PRIOR TO SUBMISSION. THE CONTRACTOR REMAINS SOLELY RESPONSIBLE FOR ERRORS AND OMISSIONS ASSOCIATED WITH THE PREPARATION OF SHOP DRAWINGS AS THEY PERTAIN TO MEMBER SIZES, DETAILS AND DIMENSIONS SPECIFIED IN THE CONTRACT DOCUMENTS. DO NOT BEGIN FABRICATION UNTIL SHOP DRAWINGS ARE APPROVED.
12. DO NOT MAKE SHOP DRAWINGS USING REPRODUCTIONS OF, OR MAKING REFERENCE TO, CONTRACT DRAWINGS.
13. REFER TO FINISH PLANS AND INTERIOR ELEVATIONS FOR INTERIOR FINISHES.
14. ALL DIMENSIONS ARE TO FACE OF STUD OR EDGE OF OPENING UNLESS NOTED OTHERWISE.
15. LOCATE EDGE OF DOOR OPENINGS 6" FROM INSIDE FACE OF ADJACENT PARTITION UNLESS NOTED OTHERWISE.
16. PROVIDE AND INSTALL INTERIOR SIGNAGE FOR ALL ROOMS/SPACES; PER CODE AND TO MEET OWNER'S EXISTING STANDARDS. TWO DIRECTORIES SHALL ALSO BE PROVIDED AND INSTALLED (PER FLOOR); PROVIDE SHOP DRAWINGS AND COORDINATE ALL LOCATIONS WITH ARCHITECT.
17. PROVIDE FIRE EXTINGUISHERS AND SEMI-RECESSED FIRE EXTINGUISHERS CABINETS (NUMBER AND QUANTITY TO MEET CODE BASED ON USE AND 75 FOOT TRAVEL DISTANCE). REFER TO LIFE SAFETY PLANS FOR LOCATIONS.
18. ALL DRAWINGS AND DETAILS INCORPORATING EXISTING CONDITIONS ARE REPRESENTATIVE OF EXISTING CONDITIONS ONLY. THE CONTRACTOR SHALL VERIFY THE ACCURACY OF ALL DETAILS WITH ACTUAL CONDITIONS AND COORDINATE WITH THE ARCHITECT ANY DEVIATIONS TO EXECUTE THE INTENT OF THE DETAILS.
19. REFER TO EXTERIOR ELEVATIONS FOR NOTES ON EXTERIOR CONSTRUCTION.
20. REPAIR ASPHALT/CONCRETE PAVING AS REQUIRED FOR NEW CONSTRUCTION, INCLUDING INSTALLATION OF GREASE TRAP.

KEYED NOTES

1. HI-LO ELECTRIC WATER COOLERS; REFER TO PLUMBING AND ELECTRICAL
2. MILLWORK; REFER TO FINISH PLANS AND ELEVATIONS
3. RESIDENTIAL WASHING MACHINE; REFER TO ELECTRICAL AND PLUMBING. SELECTION BY OWNER, G.C. TO COORDINATE.
4. RESIDENTIAL DRYER; REFER TO ELECTRICAL AND MECHANICAL. SELECTION BY OWNER, G.C. TO COORDINATE.
5. RESIDENTIAL REFRIGERATOR; REFER TO ELECTRICAL AND PLUMBING. SELECTION BY OWNER, G.C. TO COORDINATE.
6. SINK; REFER TO PLUMBING. REFER TO KITCHEN DRAWINGS AT KITCHEN AREA.
7. 1-1/2" O.D. STEEL PIPE HANDRAILS AT 2'-10" HEIGHT; PAINT.
8. EXISTING STEPS/RAILING TO REMAIN; PREPARE SURFACE AND PAINT ALL EXPOSED METAL.
9. CURTAIN; BY OWNER, N.I.C.. REFER TO STRUCTURAL DETAIL 12/S300 FOR REINFORCING AT EXISTING BAR JOISTS TO SUPPORT FUTURE CURTAIN.
10. EXISTING STEEL COLUMN TO REMAIN
11. ALIGN NEW PARTITION WITH EXISTING MULLION/JAMB
12. ALIGN NEW PARTITION FINISH WITH FINISH OF EXISTING CONSTRUCTION
13. EXISTING DOOR TO REMAIN
14. VENDING MACHINE, N.I.C.
15. NEW STEEL COLUMN; REFER TO STRUCTURAL
16. EXISTING ALUMINUM STOREFRONT SYSTEM TO BE REPLACED; G.C. TO COORDINATE DIMENSIONS/SHOP DRAWINGS
17. ALIGN NEW PARTITION WITH CENTERLINE OF COLUMN
18. KITCHEN EQUIPMENT; REFER TO KITCHEN DRAWINGS, PLUMBING, MECHANICAL AND ELECTRICAL
19. LOCKERS; SELECTION BY OWNER; G.C. TO COORDINATE.
20. 18" DEPTH VINYL COATED WIRE SHELVING
21. PLASTIC LAMINATE ON 3/4" PLYWOOD SHELF WITH METAL COAT HANGER ROD; ELEVATION AT 6'-8"
22. NOT USED
23. 18" DEPTH ADJUSTABLE SHELVING ON HEAVY DUTY BRACKETS AND STANDARDS; REFER TO 14/A502
24. UNDER COUNTER REFRIGERATOR; REFER TO ELECTRICAL. SELECTION BY OWNER, G.C. TO COORDINATE.
25. FURR OUT EXISTING STEEL COLUMN WITH 5/8" GYPSUM BOARD ON 3-5/8" METAL STUDS; SIMILAR TO PARTITION TYPE 'B'.

ACCESSORY NOTES

1. PROVIDE (1) TYPE 'H' MOP HOLDER AT ALL JANITOR CLOSETS.
2. SUBMIT SHOP DRAWINGS FOR SOLID PHENOLIC TOILET PARTITIONS.
3. PROVIDE (1) TYPE 'M' SOAP DISPENSER AND (1) TYPE 'P' PAPER TOWEL DISPENSER AT ALL KITCHEN AREA HAND SINKS, ART STUDIO 115, BREAK 134, TEACHING KITCHEN 154, DAY ROOM 175, DINING ACTIVITY 188 AND CRAFT ROOM 190. COORDINATE MOUNTING LOCATIONS WITH OWNER.

ACCESSORY SCHEDULE

SYMBOL	DESCRIPTION	MANUFACTURER	ITEM #	FINISH
A	36" GRAB BAR	BOBRICK	B-6806-36	SATIN FINISH S.S.
B	42" GRAB BAR	BOBRICK	B-6806-42	SATIN FINISH S.S.
C	SHOWER GRAB BAR	BOBRICK	B-5837	SATIN FINISH S.S.
D	GLASS MIRROR WITH STAINLESS STEEL FRAME	BOBRICK		SATIN FINISH S.S.
E	SEAT COVER, SANITARY NAPKIN DISPOSAL, TISSUE DISPENSER	BOBRICK	B-3571	SATIN FINISH S.S.
F	WALL MOUNTED SOAP DISPENSER	BOBRICK	B-4112	SATIN FINISH S.S.
G	SOLID PHENOLIC TOILET PARTITION			SATIN FINISH S.S.
H	MOP HOLDER	BOBRICK	B-224	SATIN FINISH S.S.
J	SHOWER ROD, VINYL CURTAIN CURTAIN HOOKS	BOBRICK	B-207	SATIN FINISH S.S.
K	SHOWER SEAT	BOBRICK	B-5181	SATIN FINISH S.S.
L	BABY CHANGING STATION			
M	SURFACE MOUNTED SOAP DISPENSER	BOBRICK	B-822	SATIN FINISH S.S.
N	SEMI-RECESSED PAPER TOWEL/ WASTE RECEPTACLE	BOBRICK	B-43944	SATIN FINISH S.S.
P	SURFACE MTD. PAPER TOWEL DISPENSER	BOBRICK	B-2860	SATIN FINISH S.S.
R	SURFACE MTD. SANITARY NAPKIN VENDOR	BOBRICK	B-435009 25	SATIN FINISH S.S.
S	SEAT COVER TISSUE DISPENSER	BOBRICK	B-3471	SATIN FINISH S.S.
U	DOUBLE ROBE HOOK	BOBRICK	B-672	SATIN FINISH S.S.

RELEASED FOR PERMITTING

© 2011 SIZEMORE GROUP

Drawn: AG
Checked: MT
Date: 1/5/11
Job No.: 09120POWDER

Revisions:

No.	Date

POWDER SPRINGS STATION RENOVATION – SENIOR CENTER
1150 POWDER SPRINGS STREET – MARIETTA, GEORGIA 30060

THIS DRAWING IS AN INSTRUMENT OF SERVICE AND SHALL REMAIN THE PROPERTY OF THE ARCHITECT. AS PART OF THIS DOCUMENT THERE IS A VISUAL REPRESENTATION OF A DESIGN WORK PRODUCT, REGARDLESS OF WHETHER THE ARCHITECT HAS ACTUALLY PROVIDED THE ORIGINAL WORK PRODUCT TO THE OWNER.

sizemoregroup

Title: ENLARGED PLANS

Scale: AS NOTED

Sheet: A110

of:

External References attached:
Xrefs: [09120_Xref-Site(09120Powder\Dwg\CD\Xref\09120_Xref-Site.dwg)]
[09120_30x42 Sheet(09120Powder\Dwg\CD\Xref\09120_30x42 Sheet.dwg)]
09120 x-plan CD [P:\proj\09120Powder\Dwg\CD\Xref\09120 x-plan CD.dwg]

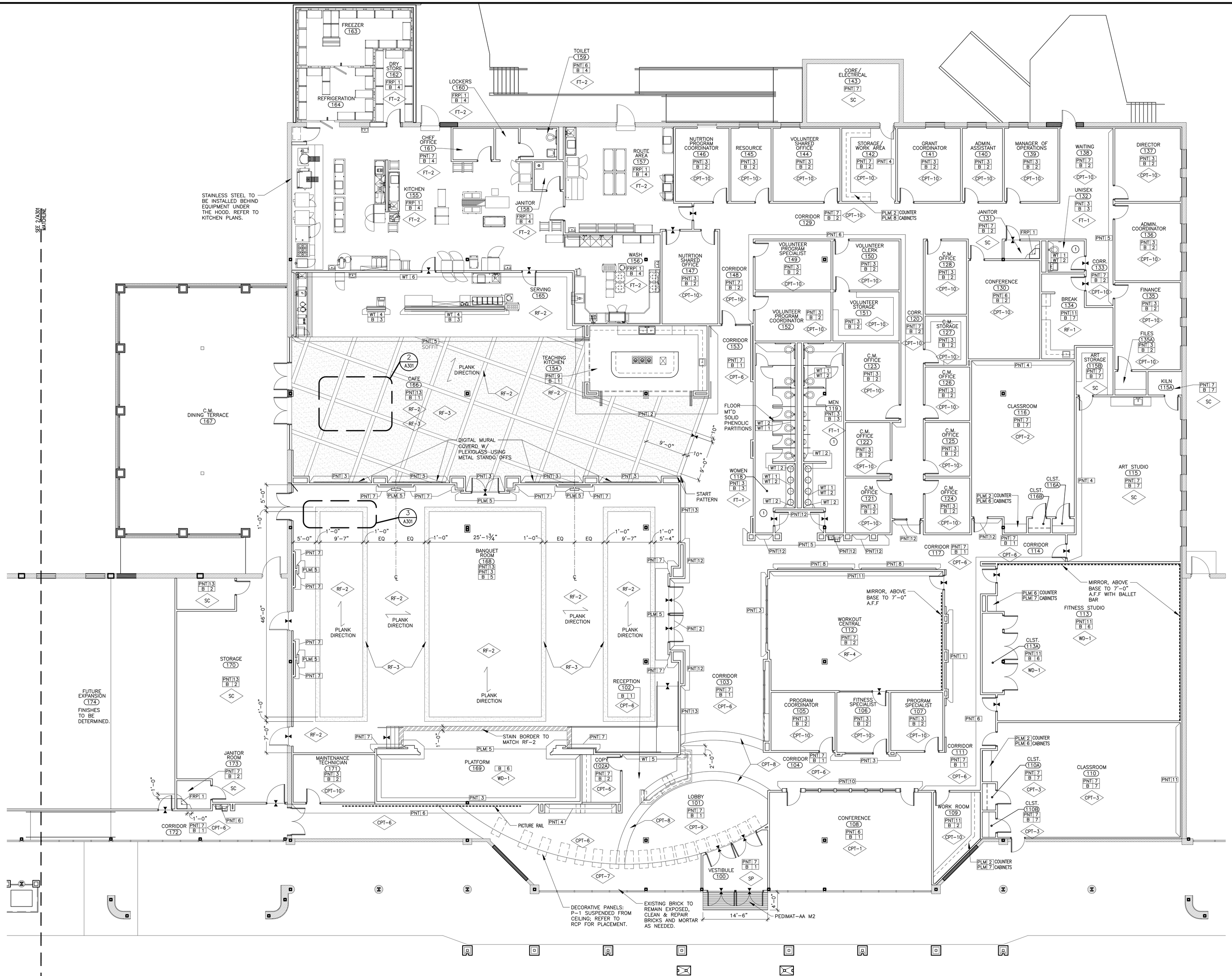

1 A300 PARTIAL FINISH PLAN
1/8" = 1'-0"

External References stitched:
09120 x-plan (P:\proj\09120Powder\Dwg\CD\xref\09120_3D42 Sheet.dwg)
09120 x-plan (P:\proj\09120Powder\Dwg\CD\xref\09120 x-plan CD.dwg)
09120 x-plan new (P:\proj\09120Powder\Dwg\CD\xref\09120 x-plan CD.dwg)
09120 x-plan new (P:\proj\09120Powder\Dwg\CD\xref\09120 x-plan CD.dwg)
09120 ar100 (SHEARL.dwg) (P:\proj\09120Powder\Dwg\CD\xref\09120 ar100 (FURNITURE PLAN.dwg)

GENERAL NOTES

1. NOTES AND LEGENDS ON SHEET A301 APPLY TO THIS SHEET.

RELEASED FOR PERMITTING

© 2011 SIZEMORE GROUP

STATE OF GEORGIA WILLIAM R. SIZEMORE III REGISTERED ARCHITECT

Drawn: SM
Checked: CO
Date: 1/5/11
Job No.: 09120POWDER

Revisions:

No.	Date

POWDER SPRINGS STATION RENOVATION – SENIOR CENTER
1150 POWDER SPRINGS STREET – MARIETTA, GEORGIA 30060

THIS DRAWING IS AN INSTRUMENT OF SERVICE PROPERTY OF THE ARCHITECT AND IS TO BE RETURNED UPON REQUEST. NO PART THEREOF MAY BE REPRODUCED OR TRANSMITTED IN ANY FORM OR BY ANY MEANS, ELECTRONIC OR MECHANICAL, INCLUDING PHOTOCOPYING, WITHOUT THE WRITTEN PERMISSION OF THE ARCHITECT.

sizemoregroup

Title: PARTIAL FINISH PLAN

Scale: AS NOTED

Sheet: A300

of:

PLAN NOTES

1. RESTROOM FLOOR TILE TO BE INSTALLED PARALLEL TO THE WET WALL, BRICK PATTERN.

NOTES

1. ALL DOOR FRAMES TO BE PAINTED TO MATCH WALL SEMI-GLOSS, UNLESS OTHERWISE NOTED.
2. EXPOSED CEILINGS TO BE PAINTED PNT-15, FLAT.
3. EXTEND CARPET INTO CLOSETS OF ROOMS INDICATED TO BE CARPETED UNLESS OTHERWISE NOTED.
4. WHERE SEAMS IN FLOORING MATERIALS OCCUR AT DOORS, THEY SHALL BE PARALLEL WITH THE DOOR IN THE CLOSED POSITION AND CENTERED ON THE THICKNESS OF THE DOOR, UNLESS OTHERWISE NOTED.
5. REFERENCE ALL ELEVATION/SECTION SHEETS FOR SPECIALIZED PLACEMENT OF FINISHES.
6. PROVIDE ADA TRANSITION AND/OR JOHNSONITE SUBFLOOR LEVELER SYSTEM WHERE CARPET MEETS DANCE FLOOR (WD-1).
7. PROVIDE ADA COMPLIANT MARBLE TRANSITION AT RESTROOMS WHERE TILE MEETS CARPET; MARBLE COLOR TO MATCH FLOOR TILE.
8. PROVIDE RUBBER OR VINYL REDUCING STRIP IN ALL AREAS WHERE CARPET MEETS VINYL OR RUBBER FLOOR. COORDINATE COLOR WITH ARCHITECT.
9. FURNISH AND INSTALL CONTINUOUS ROLL RUBBER BASE. WRAP COVE BASE AT CASED OPENINGS AND STUB WALLS.
10. CARPET TO CARPET SEAMS AND/OR CARPET TO VINYL FLOORING TRANSITIONS AT DOORWAYS ARE TO OCCUR DIRECTLY UNDER CENTERLINE OF DOOR.
11. KOROGARD H400 HANDRAIL TO BE INSTALLED ON ALL WALLS OF MAIN CORRIDORS (101, 103, 104, 111, 114, 117, 153, 172). PAINTED TO MATCH WALL, U.N.O.
12. REFER TO RCP FOR SOFFIT PAINT COLOR.
13. SLOPE TILE TO FLOOR DRAINS; TYPICAL FOR ALL FLOOR DRAINS.
14. EPOXY PAINT TO BE USED IN ALL WET AREAS; RESTROOMS, JANITOR'S CLOSET, ETC.
15. PROVIDE SCHLUTER "JOLLY" EDGE PROTECTION AT ALL WALL CORNER EDGES WHERE TILE TURNS WALL CORNER.
16. PROVIDE ADA TRANSITION AND/OR JOHNSONITE SUBFLOOR LEVELER SYSTEM WHERE CARPET MEETS DANCE FLOOR (WD-1).
17. G.C. TO PRICE ALTERNATE FOR DIGITAL MURAL AND PLEXIGLASS COVER AT CAFE WALL; ALTERNATE: 3-FORM, 4'X8' BIRCH GROVE PANELS WITH 3FORM POINT SUPPORT.

FINISH LEGEND (CONT.)

PLASTIC LAMINATE			
PLM 1	FORMICA	COLOR: CAFE WEFT, 5879-58	
PLM 2	PIONITE	COLOR: MANILA LINEN AT231 SUEDE	
PLM 3	ARBORITE	COLOR: FOLKLORE W-422 FP	
PLM 4	FORMICA	COLOR: FOSSIL 5349-58	
PLM 5	LAMIN-ART	COLOR: MINERAL GOLD CRISSCROSS 2420-L	
PLM 6	FORMICA	COLOR: EARTHEN WARP 5880-58	
PLM 7	FORMICA	COLOR: NEUTRAL WHITE 918-SP	
PLM 8	FORMICA	COLOR: FOSSIL 5349-SP	
PLM 9	FORMICA	COLOR: NEUTRAL WHITE 918-58	
SPECIALTY			
P 1	LUMICOR	STYLE: NATURAL LEAVES - NATURAL FINISH: MATTE	

FINISH LEGEND

SYMBOL	DESCRIPTION	STYLE / COLOR	REMARKS	CONTACT
	PLAN NOTE	REFER TO NOTES BELOW		
	INDICATES CHANGE IN FLOORING MATERIAL			
FLOOR				
CPT-1	INTERFACE CARPET TILE	STYLE: FARMLAND COLOR: 9304 STEPPE	ASHLAR INSTALLATION	
CPT-2	INTERFACE CARPET TILE	STYLE: SYNCOPATION COLOR: 6377 MOUNTAIN	ASHLAR INSTALLATION	
CPT-3	INTERFACE CARPET TILE	STYLE: SYNCOPATION COLOR: 6478 MOJAVE	ASHLAR INSTALLATION	
CPT-4	INTERFACE CARPET TILE	STYLE: BROADLEAF COLOR: 9312 SAVANNA	ASHLAR INSTALLATION	
CPT-5	INTERFACE CARPET TILE	STYLE: FARMLAND COLOR: 9312 SAVANNA	ASHLAR INSTALLATION	
CPT-6	INTERFACE CARPET TILE	STYLE: S102 COLOR: 9532 WALNUT	ASHLAR INSTALLATION	
CPT-7	INTERFACE CARPET TILE	STYLE: VIVA COLORES COLOR: 101158 CANELA	ASHLAR INSTALLATION	
CPT-8	INTERFACE CARPET TILE	STYLE: VIVA COLORES COLOR: 101117 MARRON	ASHLAR INSTALLATION	
CPT-9	INTERFACE CARPET TILE	STYLE: PRAIRIE GRASS COLOR: 9304 STEPPE	ASHLAR INSTALLATION	
CPT-10	BIGELOW BROADLOOM	STYLE: ON THE RISE COLOR: 7868 MOVING UP		
SP	MATS INC WALKOFF CARPET	STYLE: PRINCETON TILE COLOR: SIENNA #80		
SC	SEALED CONCRETE			
RF-1	NORA RUBBER FLOORING	STYLE: ENVIRONCARE COLOR: 2787 DRIFTWOOD		
RF-2	MANNINGTON NATURE'S PATH - 5"X48" PLANK	STYLE: HERITAGE HICKORY COLOR: 12142 TOFFEE		
RF-3	MANNINGTON NATURE'S PATH - 4"X36" PLANK	STYLE: AMERICAN WALNUT COLOR: 12125 SADDLE		
RF-4	ECO SURFACES RUBBER FLOORING	COLOR: 721 ICED FRAPUCCINO		
FT-1	CERAMIC TECHNICS 12X24 PORCELAIN TILE	STYLE: STUDIO MARMI COLOR: OLIVE BROWN HONED		
FT-2	DALTILE 6X6 QUARRY TILE	COLOR: ARID GRAY		
WD-1	STAGESTEP WOOD FLOOR	STYLE: SPRINGSTEP IV	BANQUET HALL STAGE & FITNESS ROOM	
B 1	WOOD 4" PAINTED/ PROFILE TBD	PAINTED TO MATCH WALL		
B 2	ALLSTATE 4" RUBBER COVE BASE	COLOR: A06		
B 3	CERAMIC TECHNICS 3X12 BULLNOSE PORCELAIN BASE	STYLE: STUDIO MARMI COLOR: BOTTICINO-POLISHED		
B 4	DALTILE QUARRY 6X6 COVE BASE	COLOR: ARID GRAY		
B 5	WOOD BASE 6" PAINTED/ PROFILE TBD			
B 6	STAGESTEP VENTED COVE BASE			
B 7	ALLSTATE 4" RUBBER COVE BASE	COLOR: A32		
WALL				
PNT 1	MDC CERAMIC PAINT	COLOR MATCH: SHERWIN WILLIAMS SW7017 DORIAN GRAY		
PNT 2	MDC CERAMIC PAINT	COLOR MATCH: SHERWIN WILLIAMS SW7069 IRON ORE	SATIN, U.N.O.	
PNT 3	MDC CERAMIC PAINT	COLOR MATCH: SHERWIN WILLIAMS SW2822 DOWNING SAND	SATIN, U.N.O.	
PNT 4	MDC CERAMIC PAINT	COLOR MATCH: PPG 317-5 CRACKER BITZ	SATIN, U.N.O.	
PNT 5	MDC CERAMIC PAINT	COLOR MATCH: PPG 534-7 BURGUNDY WINE	SATIN, U.N.O.	
PNT 6	MDC CERAMIC PAINT	COLOR MATCH: SHERWIN WILLIAMS SW6191 CONTENTED	SATIN, U.N.O.	
PNT 7	MDC CERAMIC PAINT	COLOR MATCH: PPG 115-1 COMBED COTTON	SATIN, U.N.O.	
PNT 8	MDC CERAMIC PAINT	COLOR MATCH: SHERWIN WILLIAMS SW7039 VIRTUAL TAUPE	SATIN, U.N.O.	
PNT 9	MDC CERAMIC PAINT	COLOR MATCH: SHERWIN WILLIAMS SW7100 ARCADE WHITE	SATIN, U.N.O.	
PNT10	MDC CERAMIC PAINT	COLOR MATCH: SHERWIN WILLIAMS SW2849 WESTCHESTER GRAY	SATIN, U.N.O.	
PNT11	MDC CERAMIC PAINT	COLOR MATCH: PPG 402-3 SEA SPRITE	SATIN, U.N.O.	
PNT12	MDC CERAMIC PAINT	COLOR MATCH: SHERWIN WILLIAMS SW7038 TONY TAUPE	SATIN, U.N.O.	
PNT13	MDC CERAMIC PAINT	COLOR MATCH: SHERWIN WILLIAMS SW6133 MUSLIN	SATIN, U.N.O.	
PNT14	MDC CERAMIC PAINT	COLOR MATCH: BENJAMIN MOORE 2069-30 DARKEST GRAPE	SATIN, U.N.O.	
PNT15	MDC CERAMIC PAINT	COLOR MATCH: PPG 455-3 COSMIC RAYS	SATIN, U.N.O.	
WT 1	CERAMIC TECHNICS 12X24 PORCELAIN TILE	STYLE: STUDIO MARMI COLOR: BOTTICINO, POLISHED		
WT 2	CERAMIC TECHNICS 12X24 PORCELAIN TILE	STYLE: STUDIO MARMI COLOR: MOCHA BROWN, POLISHED		
WT 3	CERAMIC TECHNICS 1X1 MOSAIC	STYLE: SONOMA GLASS COLOR: AQUA MIX 9868		
WT 4	CERAMIC TECHNICS 1X1 MOSAIC	STYLE: SONOMA GLASS COLOR: BEIGE 9870		
WT 5	MARAZZI 12X24 MOSAIC	STYLE: PERCORSI COLOR: BIANCO		
WT 6	CERAMIC TECHNICS 12X12 PORCELAIN TILE	STYLE: STUDIO MARMI COLOR: BOTTICINO, HONED		
FRP 1	FORMICA	TBD		
SOLID SURFACE				
SS 1	AVONITE	COLOR: COZUMEL K3-8575		
SS 2	CAMBRIA	COLOR: HALSTEAD		
SS 3	FORMICA	COLOR: CREME GRANITI		
SS 4	AVONITE	COLOR: NEW CALDRON		
SS 5	WILSONART	COLOR: HERBAL MINT 9102GS		
SS 6	WILSONART	COLOR: SESAME 9066GG		
SS 7	WILSONART	COLOR: OATMEAL 9101GS		

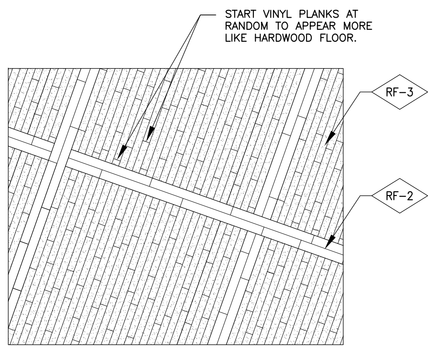

2 A301 FINISH DETAIL
1/4" = 1'-0"

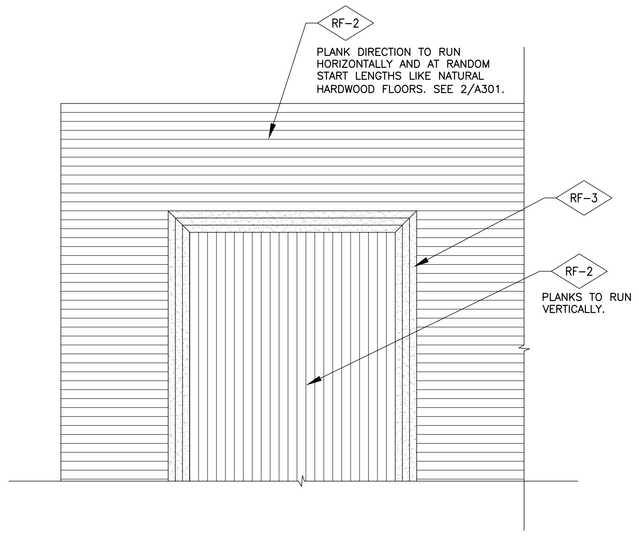

3 A301 FINISH DETAIL
1/4" = 1'-0"

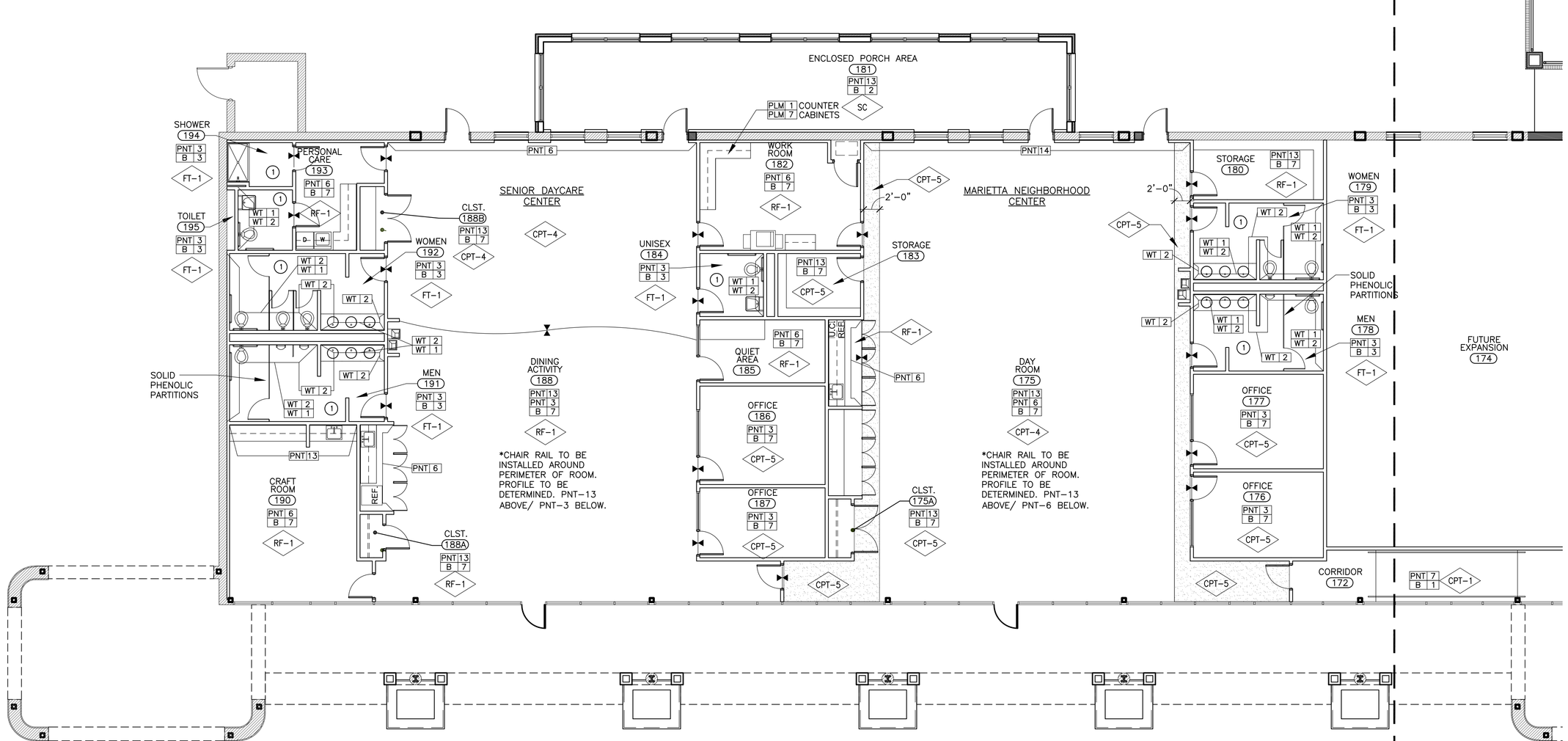

1 A301 PARTIAL FINISH PLAN
1/8" = 1'-0"

External References attached:
P:\proj\09120Powder\Dwg\CD\xref\09120_30x42 Sheet.dwg
P:\proj\09120Powder\Dwg\CD\xref\09120 x-open CD.dwg
Scheme:dwg P:\proj\09120Powder\Dwg\CD\xref\09120 x-open CD.dwg

RELEASED FOR PERMITTING

© 2011 SIZEMORE GROUP

STATE OF GEORGIA
WILLIAM C. OLIVER
REGISTERED ARCHITECT

Drawn: SM
Checked: CO
Date: 1/5/11
Job No.: 09120POWDER

Revisions:

No.	Date

POWDER SPRINGS STATION RENOVATION - SENIOR CENTER
1150 POWDER SPRINGS STREET - MARIETTA, GEORGIA 30060

THIS DRAWING IS AN INSTRUMENT OF SERVICE PROPERTY OF THE ARCHITECT AND IS TO BE RETURNED UPON REQUEST. ALL REPRODUCTIONS, COPIES OR USES OF THIS DRAWING IN WHOLE OR IN PART FOR ANY PURPOSE WITHOUT THE WRITTEN PERMISSION OF THE ARCHITECT IS PROHIBITED.

sizemoregroup

Title: PARTIAL FINISH PLAN

Scale: AS NOTED

Sheet: A301

of:

ELECTRICAL SPECIFICATIONS

PART 1 GENERAL

1.01 SCOPE:

THESE SPECIFICATIONS AND THE ELECTRICAL DRAWINGS COVER FURNISHING ALL LABOR, EQUIPMENT, MATERIALS AND PERFORMING ALL OPERATIONS IN CONNECTION WITH THE INSTALLATION OF COMPLETE ELECTRICAL SYSTEMS AS SPECIFIED HEREIN AND AS SHOWN.

1.02 CODES AND REGULATIONS:

A. ALL WORK SHALL COMPLY WITH LOCAL LAWS, ORDINANCES AND REGULATIONS APPLICABLE TO THE ELECTRICAL INSTALLATION AND WITH THE REQUIREMENTS OF THE 2008 NATIONAL ELECTRICAL CODE.

B. OBTAIN ALL PERMITS AND LICENSES, AND PAY ALL FEES AS REQUIRED FOR EXECUTION OF THE CONTRACT. ARRANGE FOR NECESSARY INSPECTIONS AND PRESENT CERTIFICATES OF APPROVAL TO THE OWNER.

1.03 DRAWINGS:

THE DRAWINGS ARE DIAGRAMMATIC AND INDICATE THE GENERAL ARRANGEMENT OF ELECTRICAL EQUIPMENT. COORDINATE THE INSTALLATION OF ELECTRICAL EQUIPMENT WITH THE ARCHITECTURAL, STRUCTURAL, MECHANICAL SYSTEMS AND THE OWNER'S REPRESENTATIVE IN ORDER TO DETERMINE EXACT LOCATIONS.

1.04 STANDARDS FOR MATERIALS AND WORKMANSHIP:

A. ALL MATERIAL SHALL BE NEW (UNLESS SPECIFICALLY INDICATED TO BE REUSED) AND SHALL BEAR THE INSPECTION LABEL OF UNDERWRITER'S LABORATORIES, INC. (UL).

B. THE PUBLISHED STANDARDS AND REQUIREMENTS OF THE NATIONAL ELECTRICAL MANUFACTURER'S ASSOCIATIONS, THE AMERICAN NATIONAL STANDARDS INSTITUTE, THE INSTITUTES OF ELECTRICAL AND ELECTRONIC ENGINEERS AND THE AMERICAN SOCIETY OF TESTING MATERIALS SHALL APPLY WHERE APPLICABLE.

C. SPECIFIED CATALOG NUMBERS AND TRADE NAMES ARE INTENDED TO DESCRIBE THE MATERIAL, DEVICES OR APPARATUS DESIRED. SIMILAR MATERIALS OF OTHER MANUFACTURERS, IF OF EQUAL QUALITY, CAPACITY OR CHARACTER, MAY BE USED UPON OWNER'S APPROVAL

D. THE INSTALLATION SHALL COMPLY WITH THE BASE BUILDING STANDARDS.

1.05 RENOVATIONS IN EXISTING FACILITIES:

A. ELECTRICAL WORK REQUIRING INTERRUPTION OF ELECTRICAL POWER WHICH WOULD ADVERSELY AFFECT THE NORMAL OPERATION OF ANY PORTION OF THE OWNER'S PROPERTY SHALL BE DONE AT A TIME OTHER THAN NORMAL WORKING HOURS. NORMAL WORKING HOURS SHALL BE CONSIDERED EIGHT AM TO FIVE PM MONDAY THROUGH FRIDAY. SCHEDULE ALL OUTAGES WITH THE OWNER'S REPRESENTATIVE PRIOR TO SHUTDOWN.

B. PRIOR TO SUBMITTING BIDS ON THE PROJECT, VISIT THE SITE OF THE WORK TO BECOME AWARE OF THE EXISTING CONDITIONS WHICH MAY AFFECT THE COST OF THE WORK. REVIEW THE SCOPE OF DEMOLITION AND NEW CONSTRUCTION. NO ADDITIONAL COSTS SHALL BE BROUGHT UPON THE OWNER FOR LACK OF THIS REVIEW.

C. WHERE WORK UNDER THIS PROJECT REQUIRES EXTENSION, RELOCATION, RECONNECTION OR MODIFICATIONS TO THE EXISTING EQUIPMENT OR WIRING SYSTEMS, THE EXISTING SYSTEMS OR EQUIPMENT SHALL BE RESTORED TO THEIR ORIGINAL AND FULLY OPERABLE CONDITION. EXTEND NEW HOMERUNS OR CIRCUIT EXTENSIONS WHERE REQUIRED. DISCONNECT AND REMOVE ALL EQUIPMENT INDICATED TO BE DEMOLISHED, INCLUDING OUTLETS, DEVICES, RACEWAY, SUPPORTS AND CONDUCTORS BACK TO THE BRANCH CIRCUIT BREAKER.

D. PROVIDE ALL SAWING, CORING, CUTTING AND PATCHING TO EXISTING WALLS, FLOORS, ETC. REQUIRED FOR ACCESS, REMOVAL OF EXISTING WORK OR INSTALLATION OF NEW WORK.

PART 2 PRODUCTS

2.01 GENERAL:

A. THE COMPONENTS OF THE ELECTRICAL SYSTEM SHALL BE WARRANTED FOR A PERIOD OF ONE YEAR FROM THE DATE OF ACCEPTANCE THEREOF EITHER FOR BENEFICIAL USE OR FINAL ACCEPTANCE, WHICHEVER IS EARLIER, AGAINST DEFECTIVE MATERIALS, DESIGN AND WORKMANSHIP.

B. MATERIALS OF THE SAME TYPE SHALL BE THE PRODUCT OF ONE MANUFACTURER.

2.02 CONDUIT:

A. CONDUIT SHALL BE GALVANIZED IMC OR EMT. INTERMEDIATE METALLIC CONDUIT SHALL BE USED WHERE SUBJECT TO DAMAGE OR EXPOSED. EMT MAY BE USED ABOVE CONCEALED CEILINGS OR WITHIN WALLS. TYPE MC CABLE WITH GROUND MAY BE USED WHERE PERMITTED BY CODE. HOMERUNS SHALL BE EMT.

B. EMT COUPLINGS AND CONNECTORS SHALL BE STEEL SET-SCREW TYPE. CONNECTORS SHALL HAVE INSULATED THROATS. DIE-CAST FITTINGS ARE NOT ACCEPTABLE.

2.03 CONDUCTORS:

A. CONDUCTORS SHALL BE COPPER OF 98% CONDUCTIVITY, NO.12 MINIMUM, 600 VOLTS, UNLESS DESIGNATED OTHERWISE.

B. CONDUCTORS NO. 10 AND SMALLER SHALL BE SOLID WITH TYPE THHN/THWN INSULATION; NO. 8 AND LARGER SHALL BE STRANDED WITH TYPE XHHW INSULATION.

C. CONDUCTORS SHALL BE COLOR CODED. ALL CONDUCTORS SHALL BE TERMINATED PER EQUIPMENT UL LISTING.

2.04 DEVICES:

A. WALL SWITCHES SHALL BE 120-277 VOLTS, 20A:

SINGLE POLE	HUBBELL CS1221 SERIES
THREE WAY	HUBBELL CS1223 SERIES

B. WHERE TWO OR MORE DEVICES OCCUR, THEY SHALL BE MULTI-GANGED IN ONE-PIECE COVERPLATE.

C. DUPLEX RECEPTACLES SHALL BE 125 VOLT, 15A, HUBBELL NO. 5262. RECEPTACLES ON A DEDICATED CIRCUIT SHALL HAVE A 20A RATING. HUBBELL NO. 5362.

D. COLOR OF DEVICES, AND TYPE AND COLOR OF COVERPLATES SHALL BE AS SELECTED BY ARCHITECT.

E. WALL-MOUNTED DIMMERS SHALL BE LUTRON NOVA-T OR APPROVED EQUAL. PROVIDE FLUSH INSTALLATION. WHERE DIMMERS OCCUR ON THE SAME WALL AS SWITCHES, SWITCH SHALL BE SLIDE-TYPE TO MATCH DIMMER. DIMMERS SHALL BE RATED TO HANDLE THE WATTAGE SHOWN ON THE DRAWING. (DO NOT LOAD ABOVE 80%)

2.05 PANELBOARDS:

A. PANELBOARDS SHALL BE OF THE AUTOMATIC CIRCUIT BREAKER TYPE, THREE PHASE, FOUR WIRE, 120/208 V OR 277/480V SOLID NEUTRAL AS SCHEDULED. THE NEUTRAL BUS SHALL UTILIZE SET-SCREWS TO BOND THE NEUTRAL WIRE TO THE NEUTRAL BUS THROUGH HOLES DRILLED IN THE NEUTRAL BAR. PROVIDE 200% RATED NEUTRALS WHERE TWO NEUTRALS ARE SHOWN ON RISER DIAGRAM.

B. ALL CIRCUIT BREAKERS SHALL BE UL LABELED AND SHALL BE THERMAL AND MAGNETIC MOLDED CASE TYPE, QUICK-MAKE AND QUICK-BREAK, BOTH ON MANUAL AND ON MAGNETIC OPERATION. BREAKERS SHALL BE OF THE OVER-THE-CENTER TOGGLE OPERATING TYPE, WITH THE HANDLE GOING TO A POSITION BETWEEN "ON" AND "OFF" TO INDICATE AUTOMATIC TRIPPING. ALL MULTI-POLE BREAKERS SHALL BE INTERNAL COMMON TRIP. BREAKERS SHALL NOT BE RATED AT LESS THAN 10,000 RMS SYMMETRICAL AMPERES INTERRUPTING CAPACITY. ALL BREAKERS SHALL BE BOLT-ON TYPE.

C. PANELBOARDS SHALL BE SURFACE MOUNTED OR RECESSED AS SHOWN ON PLANS, WITH BAKED-ON ENAMEL TRIM, ADJUSTABLE TRIM CLAMPS AND DOOR WITH LOCK AND CATCH. PROVIDE TYPEWRITTEN DIRECTORIES UNDER PLASTIC, WITH ALL SPARES MARKED IN PENCIL. PROVIDE BAKELITE NAMEPLATE.

D. PANELBOARDS SHALL BE BY SQUARE D, GENERAL ELECTRIC, SIEMENS OR CUTLER HAMMER.

2.06 LIGHTING:

A. ALL LIGHTING FIXTURES, TRIM, ETC. SHALL BE AS INDICATED IN THE ARCHITECTURAL REFLECTED CEILING LEGEND, UNLESS NOTED OTHERWISE.

B. ALL LAMPS AND BALLASTS SHALL BE THE ENERGY CONSERVING TYPE. FLUORESCENT BALLASTS SHALL BE THE HIGH POWER FACTOR TYPE, CLASS A SOUND RATING, CLASS P PROTECTION AND CBM CERTIFIED. BALLASTS FOR HID LAMPS SHALL BE CONSTANT WATTAGE AUTO TRANSFORMER (CWA) TYPE.

C. ALL FLUORESCENT AND HID LAMPS REQUIRE 100 HOURS OF CONTINUOUS BURN-IN TIME TO SEASON THE LAMPS AND PREVENT CARBON-SCORCHING WHICH COULD DEGRADE LAMP LIFE BY 50%. ALL LAMPS TO BE BURNING AT TIME OF FINAL INSPECTION.

D. CONFIRM ALL CEILING TYPES BEFORE ORDERING NEW LIGHTING FIXTURES.

E. EACH LIGHTING FIXTURE SHALL HAVE BEEN TESTED AND CERTIFIED FOR PROPER OPERATION BY THE FIXTURE MANUFACTURER FOR THE TYPE MOUNTING AND CEILING ON/IN WHICH IT IS INSTALLED.

F. PROVIDE LAMPS WITH A MINIMUM COLOR RENDERING INDEX (CRI) OF 80. INCANDESCENT LAMPS SHALL BE 130 VAC RATING. ALL FLUORESCENT LAMPS SHALL BE THE SAME COLOR TEMPERATURE, PRODUCED BY THE SAME MANUFACTURER.

F. BATTERY PACKS FOR 2'X4' FIXTURES SHALL OPERATE TWO LAMPS AT 1300 LUMENS FOR A MINIMUM OF 90 MINUTES. PROVIDE 24-HOUR POWER.

2.07 DATA/TELEPHONE OUTLETS:

A. PROVIDE 4"x4" JUNCTION BOX WITH SINGLE GANG PLASTER RING AND 3/4" CONDUIT WITH PULL-STRING UP TO CEILING CAVITY FOR USE BY TENANT'S VENDOR. DEVICE, COVERPLATE, AND ALL CABLING BY TENANT'S VENDOR. COORDINATE TYPE OF TERMINATION AND LOCATION WITH THE TENANT'S VENDOR.

B. DATA/TELEPHONE OUTLETS IN SYSTEM TYPE FURNITURE SHALL BE FED FROM POKE-THRUS OR WALL FEEDS. INSTALL CONDUIT WITH PULL STRING. COORDINATE TERMINATION TYPE AND LOCATION WITH TENANT'S VENDOR.

PART 3 EXECUTION

3.01 COORDINATION:

A. BEFORE ANY PIPING, CONDUIT, OUTLETS, EQUIPMENT OR LIGHTING FIXTURES ARE LOCATED IN ANY AREA, COORDINATE THE SPACE REQUIREMENTS OF ALL TRADES. SUCH SHALL BE ARRANGED SO THAT SPACE CONDITIONS WILL ALLOW ALL TRADES TO INSTALL THEIR WORK, AND WILL ALSO PERMIT ACCESS FOR FUTURE MAINTENANCE AND REPAIR.

B. COORDINATION OF SPACE REQUIREMENTS WITH ALL TRADES SHALL BE PERFORMED SO THAT:

1. NO PIPING OR DUCTWORK, OTHER THAN ELECTRICAL, SHALL BE RUN WITHIN 42" OF PANELBOARDS, SWITCHBOARDS, OR TRANSFORMERS.

2. NO PIPES OR DUCTS SHALL BE RUN WITHIN DEDICATED SPACES, PER NEC 110.26(f).

3.02 PROTECTION OF MATERIALS:

A. ALL CONDUIT AND OTHER OPENINGS SHALL BE KEPT PROTECTED TO PREVENT ENTRY OF FOREIGN MATTER. FIXTURES, EQUIPMENT AND APPARATUS SHALL BE KEPT COVERED FOR PROTECTION AGAINST DIRT, WATER, CHEMICAL OR MECHANICAL DAMAGE BEFORE AND DURING CONSTRUCTION.

B. THE ORIGINAL FINISH, INCLUDING SHOP COAT OF PAINT OF FIXTURE, APPARATUS OR EQUIPMENT THAT HAS BEEN DAMAGED, SHALL BE RESTORED.

3.03 CONDUIT:

A. ALL CONDUIT SHALL BE INSTALLED CONCEALED EXCEPT IN UNFINISHED SPACES OR WHERE SHOWN OTHERWISE.

B. MINIMUM CONDUIT SIZE SHALL BE 1/2 INCH.

3.04 CONDUCTORS:

A. CONDUCTORS FOR LIGHTING AND RECEPTACLE CIRCUITS SHALL HAVE COLOR CODED JACKETS. THE WIRING SHALL BE COLOR CODED WITH THE SAME COLOR USED WITH ITS RESPECTIVE PHASE THROUGH THE ENTIRE JOB AS FOLLOWS:

120/208V	277/480V
PHASE A – BLACK	PHASE A – BROWN
PHASE B – RED	PHASE B – ORANGE
PHASE C – BLUE	PHASE C – YELLOW
NEUTRAL – WHITE	NEUTRAL – GREY
GROUND – GREEN	GROUND – GREEN

B. BRANCH CIRCUIT CONDUCTORS SHALL NOT BE SMALLER THAN NO. 12 AND WHERE THE HOME RUN FROM CENTER OF LOAD EXCEEDS 60'-0", THE CONDUCTORS FROM HOME RUN OUTLET TO PANEL SHALL BE NO. 10 MINIMUM.

C. ALL CONDUCTORS SHALL BE INSTALLED IN CONDUIT.

3.05 GROUNDING:

A. RACEWAYS, BOXES, OUTLETS AND CABINETS SHALL BE BOUND TOGETHER TO FORM A CONTINUOUS METALLIC GROUNDING CIRCUIT IN ACCORDANCE WITH NEC ART. 250.

B. SIZE OF GROUNDING CONDUCTOR TO BE PER NEC UNLESS NOTED AS LARGER ON DRAWINGS.

C. A SEPARATE GROUND CONDUCTOR SHALL BE PROVIDED FOR EACH BRANCH CIRCUIT IN EACH CONDUIT HOMERUN TO A PANELBOARD, DISTRIBUITION PANEL, SWITCHBOARD, ETC. AND EXTENDED TO CONNECT TO EACH DEVICE.

3.06 DOCUMENTATION:

A. PROVIDE AS-BUILT DRAWINGS OF COMPLETE INSTALLATION FOR OWNER'S FACILITIES DEPARTMENT. APPROVED SUBMITTALS, INSTALLATION INSTRUCTIONS AND MAINTENANCE/SUPPLY CONTACTS FOR ALL EQUIPMENT PROVIDED SHALL BE DOCUMENTED IN O&M MANUALS. SUBMIT THREE (3) COPIES FOR REVIEW PRIOR TO FINAL COMPLETION.

B. PROVIDE COMPLETE TYPED PANELBOARD DIRECTORIES INDICATED LOAD TYPE AND LOCATION WITH FIELD CHANGES RECORDED. DO **NOT** SIMPLY USE COPIES OF DESIGN PANEL SCHEDULES FROM DRAWINGS.

C. PROVIDE SUBMITTALS ON PANELBOARDS, TRANSFORMERS, LIGHT FIXTURES, AND FIRE ALARM SYSTEM/DEVICES FOR ARCHITECT/ENGINEER APPROVAL PRIOR TO PURCHASE. SUBMIT ELECTRICAL ROOM LAYOUT WITH CLEARANCES PER NEC 110.26.

GEORGIA ENERGY CODE COMPLETION REQUIREMENTS – CONTRACTOR SHALL PROVIDE AS-BUILT RECORD DRAWINGS OF THE ACTUAL INSTALLATION WITHIN 30 DAYS OF SYSTEM ACCEPTANCE THAT INCLUDE A SINGLE-LINE/RISER DIAGRAM OF THE ELECTRICAL DISTRIBUTION RELATED TO THIS PROJECT AND FLOOR PLANS SHOWING THE LOCATION OF ALL DISTRIBUTION EQUIPMENT AND THE AREAS SERVED BY SAID EQUIPMENT. DRAWINGS SHALL INCLUDE SCHEDULES FOR ALL DISTRIBUTION EQUIPMENT INDICATING ACTUAL CIRCUIT NUMBERS FOR ALL FEEDERS AND BRANCH CIRCUITS. CONTRACTOR SHALL PROVIDE OPERATION AND MAINTENANCE MANUALS THAT INCLUDE COPIES OF ALL APPROVED SUBMITTAL DATA INDICATING ALL OPTIONS AND ACCESSORIES INSTALLED, MAINTENANCE INSTRUCTIONS FOR ALL EQUIPMENT REQUIRING MAINTENANCE, CONTACT INFORMATION FOR AT LEAST ONE QUALIFIED SERVICE AGENCY FOR EACH PIECE OF EQUIPMENT REQUIRING MAINTENANCE, AND A COMPLETE NARRATIVE AND SCHEMATIC OF THE SYSTEM INSTALLED AS IT IS NORMALLY INTENDED TO OPERATE.

DRAWING INDEX

E-100	ELECTRICAL GENERAL
E-200	FLOOR PLAN – LIGHTING PART A
E-201	FLOOR PLAN – LIGHTING PART B
E-300	FLOOR PLAN – ELECTRICAL PART A
E-301	FLOOR PLAN – ELECTRICAL PART B
E-400	KITCHEN PLAN – ELECTRICAL
E-500	ELECTRICAL SCHEDULES
E-501	ELECTRICAL SCHEDULES

GENERAL NOTES

1. ALL WORK SHALL BE COORDINATED WITH THE WORK OF OTHER TRADES TO AVOID INTERFERENCES AND CONFLICTS. REFER TO THE DRAWINGS OF THE RESPECTIVE SYSTEMS PRIOR TO SUBMISSION OF BIDS FOR ADDITIONAL WORK WHICH MAY BE REQUIRED AS PART OF THIS WORK. NO ALLOWANCES WILL BE MADE FOR THE LACK OF COORDINATION BETWEEN DISCIPLINES OR SYSTEMS AND EQUIPMENT.
2. ATTENTION IS CALLED TO THE FACT THAT THIS IS A RENOVATION WITHIN AN EXISTING BUILDING. WHEN THE WORK IS FINISHED, THE ELECTRICAL INSTALLATION SHALL BE COMPLETE IN EVERY RESPECT, COMPLETELY INTEGRATED WITH ALL THE EXISTING ELECTRICAL SYSTEMS. ALL EXISTING ELECTRICAL WORK REQUIRED TO REMAIN IN USE DURING AND/OR AFTER THE COMPLETION OF THE WORK SHALL BE EXTENDED, REROUTED, REPLACED, RECONNECTED OR OTHERWISE TO FIT INTO THE RENOVATED AREA AND LEFT IN SAFE WORKING ORDER. CONTRACTOR TO VERIFY LOAD OF EXISTING CIRCUITS. REMOVE ALL ELECTRICAL EQUIPMENT AND MATERIAL WHICH IS IN THE AFFECTED SPACE AND WILL NOT BE RE-USED BY THE RENOVATION.
3. THE WORK SHALL BE COORDINATED WITH THE ARCHITECTURAL DOCUMENTS FOR THE EXACT LOCATION OF LIGHT FIXTURES, EQUIPMENT, DEVICES, ETC. TO ASSURE PROPER PLACEMENT OF SAID DEVICES AND EQUIPMENT. SWITCHES SHALL BE PLACED ON LATCH SIDE OF ALL DOOR OPENINGS. WHERE A CONFLICT EXISTS BETWEEN ANY TWO DOCUMENTS, NOTIFY THE ARCHITECT PRIOR TO ANY INSTALLATION FOR RESOLUTION.
4. THE CONTRACTOR SHALL VERIFY ALL EQUIPMENT BEING INSTALLED PRIOR TO INSTALLATION TO ASSURE THAT THE FEEDER, DISCONNECT, STARTER, OVERCURRENT PROTECTION, ETC. MATCHES THE ACTUAL NAMEPLATE DATA AS SUPPLIED BY THE MANUFACTURER PRIOR TO BID. FULLY COORDINATE EQUIPMENT TO BE PROVIDED TO ASSURE NO ADDITIONAL COSTS TO THE CONTRACT.
5. CONDUIT HOMERUNS MAY BE COMBINED TO INCLUDE UP TO FOUR (4) CIRCUITS. PROVIDE QUANTITY OF NEUTRALS INDICATED FOR EACH CIRCUIT.
6. SPECIFIC REQUIREMENTS REGARDING MATERIALS, WORKMANSHIP AND THE WORK TO BE DONE ARE COVERED BY THE SPECIFICATIONS WHICH COMPLEMENT THE PLANS. WORK CALLED FOR BY THE SPECIFICATIONS OR THE PLANS IS REQUIRED THE SAME AS IF REQUIRED BY BOTH. WHERE A CONFLICT EXISTS BETWEEN THE PLANS AND THE SPECIFICATIONS, THE MORE STRINGENT REQUIREMENTS OF THE TWO SHALL APPLY UNLESS SPECIFICALLY APPROVED IN WRITING BY THE ARCHITECT/ENGINEER.
7. COORDINATE ALL CUSTOM RECEPTACLES AND CIRCUITS WITH EQUIPMENT FURNISHED BY TENANT. PROVIDE OUTLETS COMPATIBLE WITH EQUIPMENT REQUIREMENTS.
8. PROVIDE FIRE ALARM CONTROL PANEL AT LOCATION SHOWN IN ACCORDANCE WITH NFPA 72. PROVIDE ADEQUATE ALARM RECEIVING AND OUTPUT MODULES TO ACCOMMODATE DEVICES SHOWN ON PLANS. ALL COMPONENTS OF THE FIRE ALARM SYSTEM SHALL CONFIRM TO ADA GUIDELINES.
9. SUPPORT ALL ELECTRICAL CONDUIT, RACEWAY, OUTLET AND JUNCTION BOXES VIA THREADED ROD OR DEDICATED INDEPENDENT #12 GA GALVANIZED TIE WIRE. ITEM EXCEPT LIGHT FIXTURES TO CEILING CONSTRUCTION OR SUPPORT WIRES EXCEPT: ABOVE "T-BAR" CEILING, ONE (1) 3/4" OR SMALLER CONDUIT MAY BE SUPPORTED BY TO THE SUPPORT WIRES. SUPPORT MULTIPLE CONDUITS FROM ADDITIONAL WIRES COMPLYING WITH NEC ART. 300.11.
10. ALL PANELS AFFECTED BY THIS FITUP SHALL HAVE CORRECT BAKELITE NAMEPLATE ON THE COVER, LABELED CIRCUIT NUMBERING AND UPDATED, TYPEWRITTEN PANELBOARD DIRECTORIES. DO **NOT** SIMPLY USE COPIES OF DESIGN PANEL SCHEDULES FROM DRAWINGS.
11. ALL CONDUIT PENETRATIONS OF FIRE RATED WALLS, FLOORS, AND PARTITIONS SHALL BE FIRESTOPPED WITH A U.L. RECOGNIZED PRODUCT RESTORING THE INTEGRITY OF THE BARRIER PENETRATED. UTILIZE NELSON "FSP" FIRESTOP PUTTY, "PCS" PIPE CHOKE SYSTEM, OR "CLK" FIRESTOP CAULK TO PROVIDE A U.L. LISTED ASSEMBLY, OR APPROVED ALTERNATE.
12. **CONTRACTOR SHALL TEST EACH AND EVERY WIRING DEVICE AND LIGHT FIXTURE FOR CORRECT OPERATION AND DOCUMENT PROJECT VOLTAGE READINGS. PROVIDE COPY OF LIGHTING AND POWER FLOOR PLANS WITH DEVICES AND FIXTURES HIGHLIGHTED TO INDICATE SUCCESSFUL TESTING AND OPERATION. SUBMIT TO THE ARCHITECT PRIOR TO REQUEST FOR FINAL CONSTRUCTION REVIEW.**
13. **PRIOR TO SUBMISSION OF BIDS, CONTRACTOR SHALL REVIEW QUANTITY OF EXISTING CIRCUITS AVAILABLE AS PART OF THE SITE SURVEY REQUIRED BY 1.05 B.**
14. FIRE ALARM VISUAL SIGNALING DEVICES SHALL BE 75cd STROBES MINIMUM AND SHALL COMPLY WITH UL 1368.
15. REFER TO ARCHITECTURAL DRAWINGS FOR DIMENSIONED LOCATIONS OF ALL FLOOR CORES SHOWN ON PLANS. LOCATIONS SHALL BE COORDINATED WITH STRUCTURE BELOW. NOTIFY ARCHITECT OF ANY FIELD CONFLICTS FOR DIRECTION.
16. ANY NEW DEVICE SHOWN THAT OCCURS WITHIN 1'-0" OF AN EXISTING DEVICE SHALL BE EXISTING TO REMAIN.
17. REFER TO EQUIPMENT CUT SHEETS AND MANUFACTURER'S DATA FOR ROUGH IN LOCATIONS OF ELECTRICAL CONNECTIONS AND INTERCONNECTIONS OF ALL EQUIPMENT.
18. CONTRACTOR SHALL COORDINATE ELEVATIONS AND PIPING SYSTEM SLOPES SUCH THAT DUCTWORK, PIPING, RACEWAY, CABLE TRAY, AND ASSOCIATED EQUIPMENT IS INSTALLED AT UNIFORM ELEVATIONS WITH MINIMAL OFFSET. PROVIDE COORDINATION DRAWING TO ENGINEER FOR REVIEW PRIOR TO EQUIPMENT ORDERS AND ROUGH-IN.
19. COORDINATE WITH SPECIALTY SYSTEMS VENDORS TO PROVIDE RACEWAY AND CABLING, POWER AND CONTROL INTERFACES AS REQUIRED FOR COMPLETE, OPERABLE SYSTEMS. INSTALL POWER WHIP AND SYSTEM FURNITURE (PROVIDED BY OTHERS) AS NECESSARY.
20. AFTER INSTALLATION OF ALL NEW DISTRIBUTION EQUIPMENT, THE CONTRACTOR SHALL CONDUCT A FULL SHORT CIRCUIT COORDINATION STUDY TO CONFIRM REQUIRED CIRCUIT BREAKER ADJUSTABLE SETTINGS AND FUSE RATINGS FOR ALL EQUIPMENT TO BE PROVIDED. PROVIDE REPORT INDICATING RECOMMENDED SETTINGS AND TRIP CURVES.

SENSOR LEGEND

^{SP}	2-BUTTON WALL SWITCH WITH OCCUPANT SENSOR AND PHOTOELECTRIC SENSOR WATTSTOPPER #DW-200.
^{S}	DUAL TECH WALL SWITCH WITH MANUAL 'ON' OPTION
^{LV}	LOW VOLTAGE OVERRIDE SWITCH.
^{P}	WALL SWITCH WITH PHOTOCELL. WATTSTOPPER #LS-100.
	WALL MOUNTED DUAL TECH SENSOR
	CEILING MOUNTED CORRIDOR DUAL TECH SENSOR
	CEILING MOUNTED OPEN AREA DUAL TECH SENSOR
	CEILING MOUNTED PHOTOELECTRIC SENSOR. PROVIDE B OR BZ POWER PACKS AS REQUIRED WATTSTOPPER #LS-301.

NOTES:

1. COORDINATE QUANTITY AND LOCATION OF SENSORS WITH FACTORY REPRESENTATIVE.
2. COORDINATE QUANTITY AND LOCATION OF SWITCHPACKS WITH FACTORY REPRESENTATIVE.
3. PROVIDE SUBMITTAL LAYOUT DRAWINGS FROM SUCCESSFUL BIDDER.
4. OCCUPANCY SENSOR LOCATIONS AS SHOWN ON THE LIGHTING DRAWINGS.
5. QUANTITIES AND LOCATIONS OF SWITCHPACKS SHALL BE DETERMINED BY THE CONTRACTOR FOR A COMPLETE AND OPERABLE SYSTEM.
6. IN GENERAL, SWITCHPACKS ARE TO BE INSTALLED AHEAD OF (IN SERIES WITH) THE SWITCHES. THE SENSORS ESSENTIALLY ENABLE THE CIRCUIT, WHILE THE SWITCH ALLOWS FOR MANUAL OFF PRIOR TO SENSORS TURNING LIGHTS OFF.
7. SWITCHPACKS CAN RECEIVE INPUTS FROM MULTIPLE SENSORS (FOR EXAMPLE, IN OPEN AREAS). LIKEWISE, MULTIPLE SWITCHPACKS CAN BE CONTROLLED BY A SINGLE SENSOR (FOR EXAMPLE, IN A CONFERENCE ROOM WHERE LIGHTS ARE AT TWO DIFFERENT VOLTAGES).
8. ALL SENSORS SHOULD BE SET AT THE CODE-MAXIMUM SETTING OF 30 MINUTES.
9. BASIS OF DESIGN TO BE WATTSTOPPER LOW-PROFILE CEILING DUAL TECH SENSORS.
10. PHOTOELECTRIC CONTROLS SHALL BE INSTALLED DOWN STREAM FROM OCCUPANCY SENSORS.

BASIS OF DESIGN IS WATSTOPPER SYSTEM. CRESTRON AND OTHER APPROVED EQUALS ARE ALSO ACCEPTABLE.

ELECTRICAL SYMBOL LEGEND

SYMBOL	DESCRIPTION	MTG. HT UNO
X-1,3,5	ARROWHEAD INDICATES HOMERUN. X-1, 3, AND 5 ADJACENT TO HOMERUN ARROWHEADS INDICATES HOMERUN TO PANEL X, CIRCUIT NUMBERS 1, 3, AND 5.	
3,5	INDICATES CIRCUIT CONTINUATION OF CIRCUITS 3 AND 5 OF PANEL X.	
	MARKS ACROSS RACEWAY SYMBOLS INDICATE THE NUMBER OF NO.12 CONDUCTORS, UNLESS OTHERWISE NOTED. NO MARKS INDICATE TWO NO.12 CONDUCTORS. EQUIPMENT GROUNDING CONDUCTORS ARE NOT INDICATED BY MARKS, BUT ARE REQUIRED.	
	RACEWAY INSTALLED CONCEALED IN WALL OR ABOVE CEILING / CONCEALED BELOW FLOOR	
	DUPLEX RECEPTACLE OUTLET	18"
WP	WEATHERPROOF DUPLEX RECEPTACLE OUTLET	18"
	QUADRUPLEX RECEPTACLE OUTLET	18"
	DUPLEX RECEPTACLE OUTLET – ABOVE COUNTER – MOUNTED HORIZONTALLY	48"
D / D	DUPLEX OR QUAD RECEPTACLE ON DEDICATED CIRCUIT – NOTE 6	18"
/ +42"	GFCI DUPLEX / GFCI DUPLEX RECEPTACLE OUTLET – ABOVE COUNTER MOUNTED HORIZONTALLY	18"/48"
	SWITCH RECEPTACLE OUTLET	18"
IG	ISOLATED GROUND TYPE DUPLEX RECEPTACLE (ORANGE)	18"
C	CEILING MOUNTED DUPLEX DEVICE	
	CEILING TELE/DATA DEVICE	
	SPECIAL PURPOSE RECEPTACLE OUTLET, NEMA CONFIGURATION AS REQUIRED BY EQUIPMENT TO BE CONNECTED.	18"
	TELEPHONE OUTLET / SINGLE GANG – NOTE 5	54"
	COMBINATION DATA/TELEPHONE OUTLET – NOTE 5	18"
	COMBINATION DATA/TEL OUTLET IN SYSTEM FURNITURE – NOTE 5	18"
PC	POKE-THRU FITTING FOR POWER/COMM FURNITURE FEED – NOTE 10	
D	FLUSH POKE-THRU QUADRAPLEX DEVICE WITH DATA – NOTE 9	
	PANEL AS NOTED	
/	FUSIBLE/NON-FUSED DISCONNECT SWITCH	
BR	BADGE READER BY TENANT'S VENDOR	
TV	TELEVISION OUTLET	
IC	INTERCOM OUTLET	48"
	ADA PUSH-BUTTON	48"
$	SINGLE-POLE, SINGLE-THROW TOGGLE SWITCH	48"
$3/$4	THREE-WAY TOGGLE SWITCH/FOUR-WAY TOGGLE SWITCH – NOTE 8	48"
$D	WALL-MOUNTED DIMMER SWITCH	48"
$M	MOTOR RATED TOGGLE SWITCH	48"
/ /	JUNCTION BOX-CEILING MOUNTED/WALL MOUNTED/FLOOR MOUNTED	
	TELEPHONE BACKBOARD	
	CEILING MOUNTED EXIT SIGN – NOTE 7	
	PROJECTION SCREEN	
	SURFACE-MOUNTED RACEWAY AS SPECIFIED	
	FIRE ALARM AUDIO/VISUAL SIGNALING DEVICE – NOTE 3	80"
	FIRE ALARM VISUAL SIGNALING DEVICE – NOTE 3	80"
F	FIRE ALARM PULLSTATION DEVICE – NOTE 3	48"

LEGEND NOTES:

1. UNLESS NOTED OTHERWISE, MOUNTING HEIGHT DIMENSIONS ARE TO THE CENTERLINE OF THE DEVICE OR OUTLET ABOVE GRADE OR FINISHED FLOOR.
2. ALL SYMBOLS INDICATED IN THE LEGEND MAY NOT NECESSARILY BE USED ON THE PLANS.
3. EXTEND AND CONNECT TO EXISTING BUILDING FIRE ALARM SYSTEM. SEE GN 9/E-1.
4. THE LETTER "E" ADJACENT TO ANY SYMBOL INDICATES THAT IT IS EXISTING TO REMAIN. THE LETTER "ER" INDICATES EXISTING TO BE RELOCATED.
5. REFER TO SPECIFICATION 2.07A.
6. LABEL COVERPLATES OF ALL DEVICES ON DEDICATED CIRCUITS "DEDICATED."
7. FACE QUANTITY AND DIRECTIONAL ARROWS AS INDICATED.
8. PROVIDE INTERCONNECT CONDUCTORS AS REQUIRED TO PROVIDE MULTIPLE SWITCH POINTS IN EACH AREA SHOWN.
9. PROVIDE WIREMOLD RC4 SERIES QUAD DEVICE WITH CAPACITY FOR FOUR (4) CAT5 JACKS. JACKS SHALL BE PROVIDED BY TEL/DATA VENDOR.
10. PROVIDE WIREMOLD RC9AFFTC WITH BARRIERED RACEWAY, CONDUIT ADAPTER AND 3/4"C FOR POWER, 1-1/4"C FOR COMMUNICATIONS.

ELECTRICAL ADD ALTERNATE #1:

FOR ALL DAYLIGHTING LIGHTS AND ASSOCIATED DIMMING BALLASTS, CONTRACTOR SHALL PROVIDE ADD ALTERNATE PRICING.

SUSTAINABLE DESIGN INTENT:
COMPLY WITH PROJECT REQUIREMENTS INTENDED TO ACHIEVE A CERTIFIED LEVEL RATING, MEASURED AND DOCUMENTED ACCORDING TO THE LEED-NC RATING SYSTEM (2009), OF THE U.S. GREEN BUILDING COUNCIL (USGBC).

X	UNIVERSAL-MOUNT EDGE-LIT L.E.D., 120V, EXIT SIGN WITH CLEAR ACRYLIC PANEL, RED STENCILLED LETTERS, DIRECTIONAL ARROWS AS INDICATED ON PLANS. LAMPS: INCLUDED MANUFACTURER: CHLORIDE STERLING SERIES STELX-RC
XC	UNIVERSAL-MOUNT EDGE-LIT L.E.D., 120V, EXIT SIGN WITH CLEAR ACRYLIC PANEL, RED STENCILLED LETTERS, DIREC

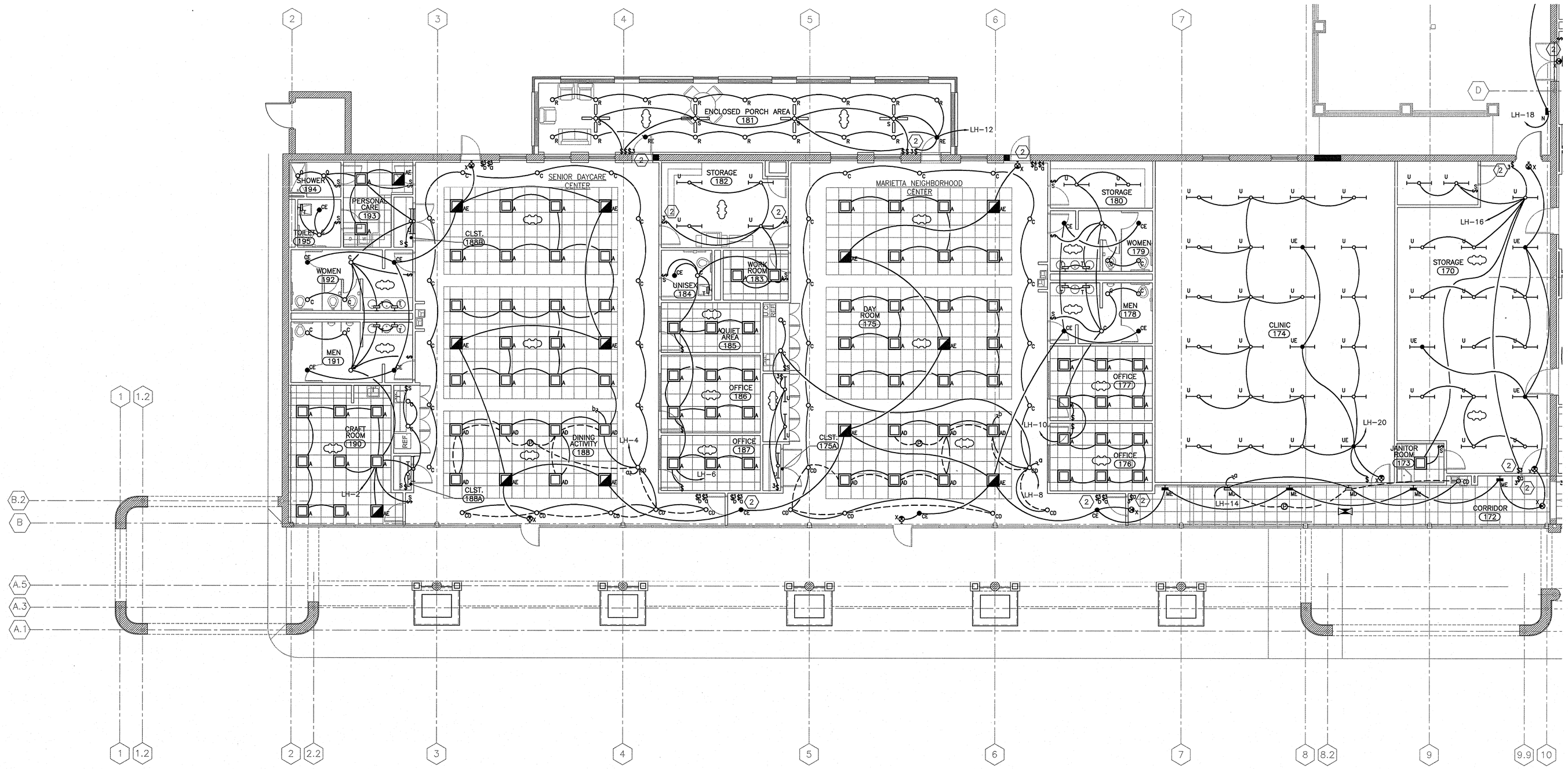

1 FLOOR PLAN – LIGHTING PART A
E200 1/8" = 1'-0"

GENERAL NOTES:

1. REFER TO ARCHITECTURAL REFLECTED CEILING PLAN FOR EXACT LOCATIONS OF ALL LIGHTING FIXTURES SHOWN.
2. REFER TO LIGHTING FIXTURE SCHEDULE ON E100.
3. ALL EMERGENCY LIGHTING FIXTURES SHOWN SHALL OPERATE AS UNSWITCHED NIGHT LIGHT FIXTURES, UNLESS NOTED OTHERWISE. WHERE REQUIRED BY LOCAL AUTHORITY, PROVIDE 24 HOUR POWER FROM LOCAL LIGHTING BRANCH CIRCUIT.
4. ALL EXISTING FIXTURES BEING REUSED SHALL BE CLEANED, RELAMPED, AND REFURBISHED.
5. PROVIDE 24-HOUR POWER TO ALL EGRESS AND EXIT LIGHT FIXTURES.
6. ALL EXIT SIGNS SHALL BE BUILDING STANDARD TO MATCH EXISTING.

KEY NOTES:

1. BASE BUILDING ELECTRICAL ROOM. REFER TO 1/E300 FOR PANEL LOCATIONS.
2. PROVIDE 3/12 – 1/2"C BETWEEN CORRESPONDING 3-WAY SWITCHES SHOWN IN THIS ROOM. TYPICAL FOR ALL.
3. EXTEND AND CONNECT SWITCHED CONDUCTOR TO EMERGENCY FIXTURES WITHIN THIS ROOM FOR CONTROL WITH ADJACENT FIXTURES. EXTEND AND CONNECT UNSWITCHED CONDUCTOR TO BATTERY PACK TO ALLOW FIXTURE TO COME ON DURING POWER FAILURE (REGARDLESS OF SWITCH POSITION). REFER TO MANUFACTURER'S WIRING DIAGRAM.

HESM&A
CONSULTING ENGINEERS
ATLANTA - JACKSON - CHARLOTTE
125 COLLIER ROAD
ATLANTA, GA 30309-2008
(404) 355-2000 - FAX (404) 355-0009
GEORGIA BOARD NO. - 559
ATL01LR

© 2010
SIZEMORE GROUP

GEORGIA REGISTERED PROFESSIONAL ENGINEER THOMAS L. HAYES

Drawn: ZHL
Checked: JSN
Date: 12/13/10
Job No.: 09121POWDER

Revisions:

No.	Date

POWDER SPRINGS STATION RENOVATION – SENIOR CENTER
1150 POWDER SPRINGS STREET – MARIETTA, GEORGIA 30060

THE DRAWING AND SPECIFICATIONS AS INSTRUMENTS OF SERVICE ARE THE PROPERTY OF THE ARCHITECT AND ARE TO BE RETURNED UPON REQUEST. THEY SHALL NOT BE USED BY ANYONE ON OTHER PROJECTS, FOR ADDITIONS TO THIS PROJECT, OR FOR COMPLETION OF THIS PROJECT BY OTHERS WITHOUT PERMISSION OF THE ARCHITECT.

sizemoregroup

Title: FLOOR PLAN LIGHTING PART A

Scale: 1/8" = 1'-0"

Sheet: E200

of:

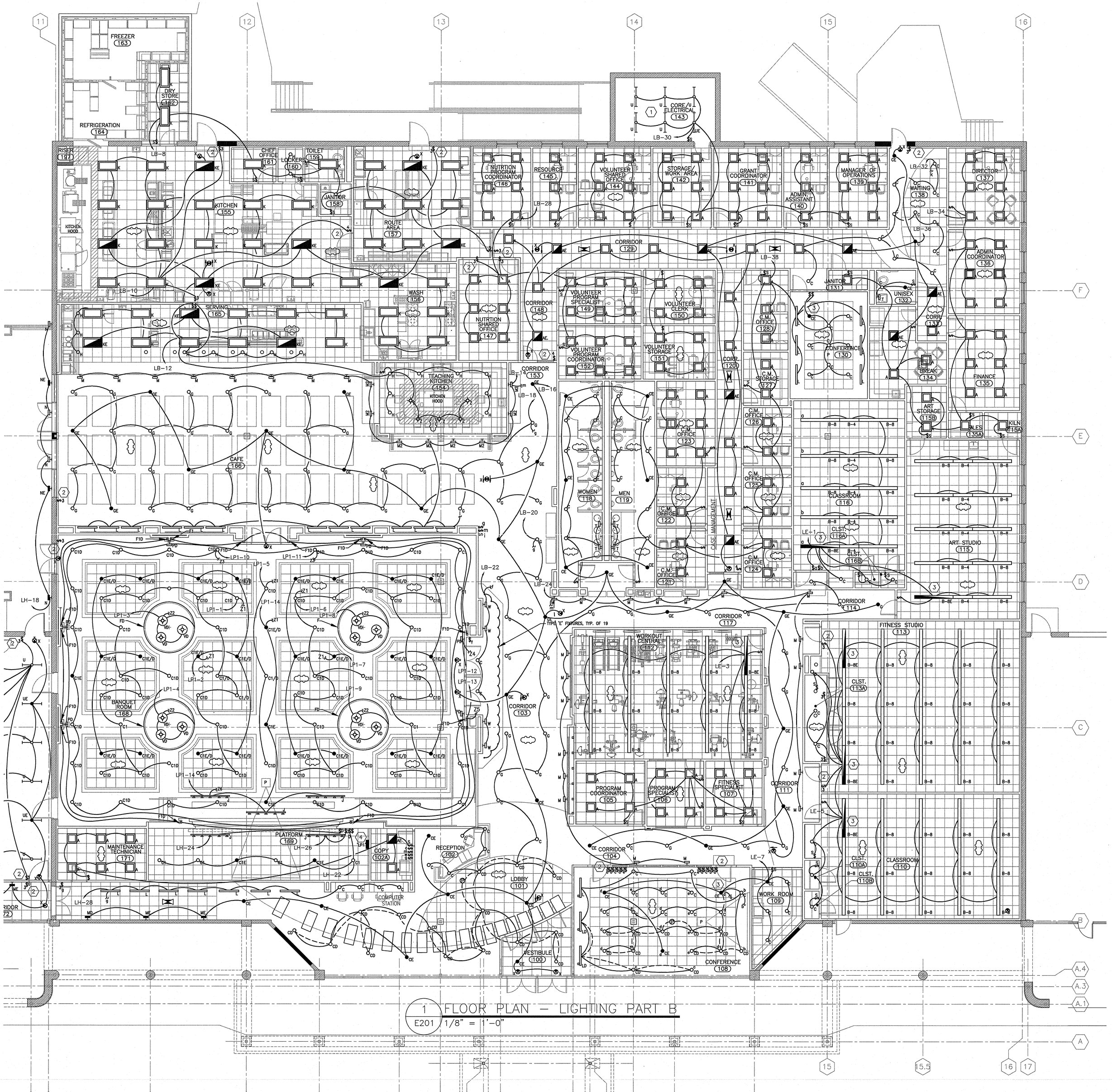

1 FLOOR PLAN – LIGHTING PART B
E201 1/8" = 1'-0"

GENERAL NOTES:

1. REFER TO ARCHITECTURAL REFLECTED CEILING PLAN FOR EXACT LOCATIONS OF ALL LIGHTING FIXTURES SHOWN.
2. REFER TO LIGHTING FIXTURE SCHEDULE ON E100.
3. ALL EMERGENCY LIGHTING FIXTURES SHOWN SHALL OPERATE AS UNSWITCHED NIGHT LIGHT FIXTURES, UNLESS NOTED OTHERWISE. WHERE REQUIRED BY LOCAL AUTHORITY, PROVIDE 24 HOUR POWER FROM LOCAL LIGHTING BRANCH CIRCUIT.
4. ALL EXISTING FIXTURES BEING REUSED SHALL BE CLEANED, RELAMPED, AND REFURBISHED.
5. PROVIDE 24-HOUR POWER TO ALL EGRESS AND EXIT LIGHT FIXTURES.
6. ALL EXIT SIGNS SHALL BE BUILDING STANDARD TO MATCH EXISTING.

KEY NOTES:

1. BASE BUILDING ELECTRICAL ROOM. REFER TO 1/E300 FOR PANEL LOCATIONS.
2. PROVIDE 3#12 – 1/2"C BETWEEN CORRESPONDING 3-WAY SWITCHES SHOWN IN THIS ROOM. TYPICAL FOR ALL.
3. EXTEND AND CONNECT SWITCHED CONDUCTOR TO EMERGENCY FIXTURES WITHIN THIS ROOM FOR CONTROL WITH ADJACENT FIXTURES. EXTEND AND CONNECT UNSWITCHED CONDUCTOR TO BATTERY PACK TO ALLOW FIXTURE TO COME ON DURING POWER FAILURE (REGARDLESS OF SWITCH POSITION). REFER TO MANUFACTURER'S WIRING DIAGRAM.
4. CONTRACTOR SHALL PROVIDE LIGHTING MANAGEMENT SYSTEM AS INDICATED. PROVIDE 24 POLE DIMMING CABINET WITH 20 AMP BREAKER (INCLUDED). MASTER CONTROL STATION AND (2) REMOTE WALL MOUNTED SWITCHES WITH ON/ALL OFF AND EMERGENCY OVER-RIDE CONTROL TO LIGHTING DIMMING PANEL 'LP1' AS INDICATED. COORDINATE NUMBER OF SCENE REQUIREMENTS WITH OWNER REPRESENTATIVE PRIOR TO PURCHASING. SYSTEM SHALL INCLUDED ALL REQUIRED ACCESSORIES, RELAY MODULES, ETC., FOR A COMPLETE AND OPERABLE SYSTEM. PANEL SHALL BE CAPABLE TO CONTROL ALL REQUIRED LIGHTING INDICATED. COORDINATE LOCATION OF OVER-RIDE SWITCH LOCATION WITH OWNER/ARCHITECT PRIOR TO INSTALLATION.

HESM&A
CONSULTING ENGINEERS
ATLANTA - JACKSON - CHARLOTTE
1255 COLLIER ROAD
ATLANTA, GA 30318-2306
(404) 352-5200 - FAX (404) 352-0059
GEORGIA BOARD NO. - 939
ATG1112

© 2010 SIZEMORE GROUP

GEORGIA REGISTERED PROFESSIONAL ENGINEER THOMAS L. ZAYKO

Drawn: ZHL
Checked: JSN
Date: 12/13/10
Job No.: 09121POWDER

Revisions:

No.	Date

POWDER SPRINGS STATION RENOVATION – SENIOR CENTER
1150 POWDER SPRINGS STREET – MARIETTA, GEORGIA 30060

THE DRAWINGS AND SPECIFICATIONS AS INSTRUMENTS OF SERVICE ARE AND SHALL REMAIN THE PROPERTY OF THE ARCHITECT WHOSE LEGAL RIGHTS ARE RESERVED. THE DRAWINGS AND SPECIFICATIONS MAY NOT BE USED FOR ANY PURPOSE NOT SPECIFICALLY AGREED TO IN WRITING BY THE ARCHITECT.

sizemore group

Title: FLOOR PLAN LIGHTING PART B
Scale: 1/8" = 1'-0"
Sheet: E201
of:

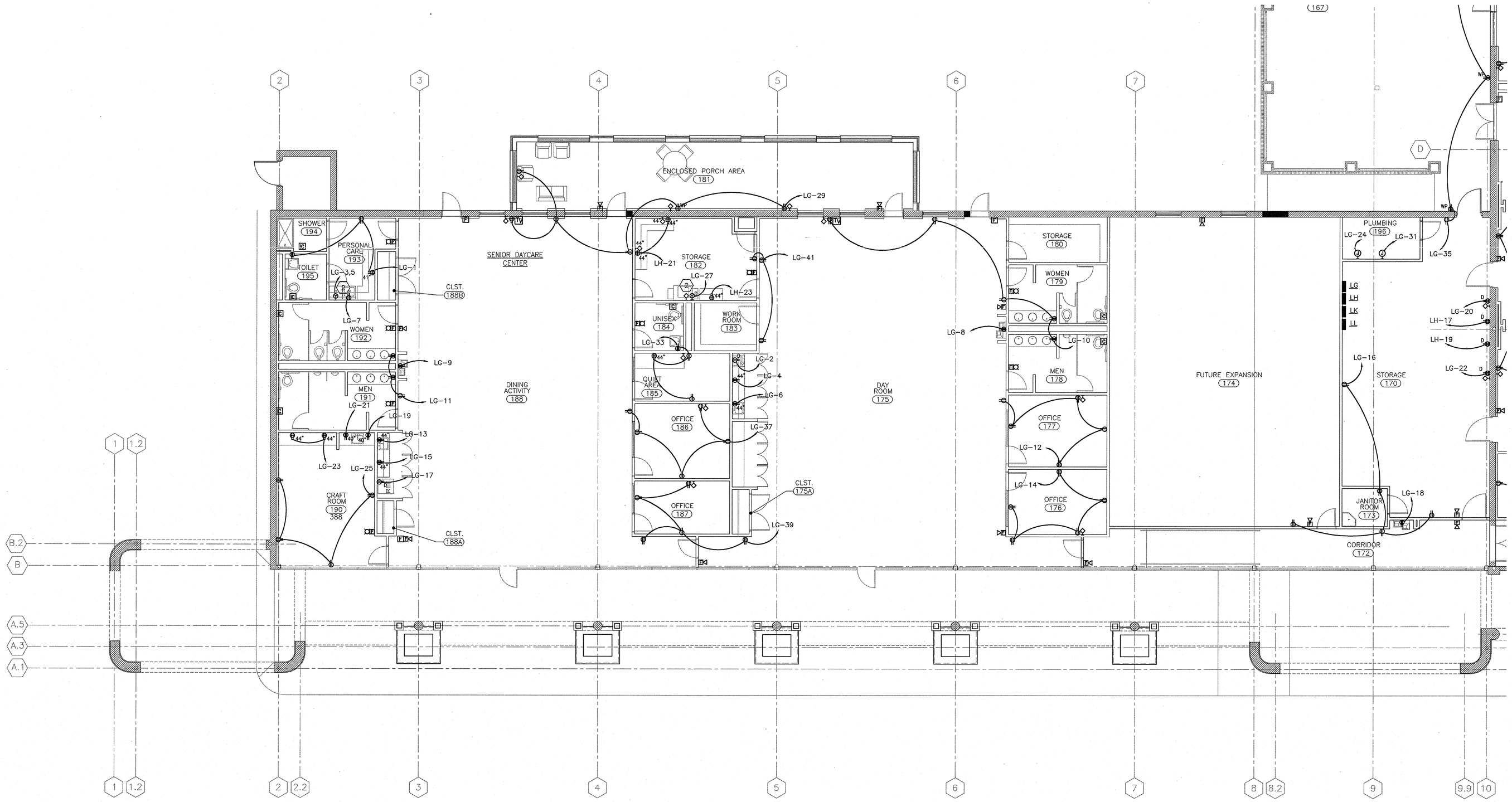

1 / E300 FLOOR PLAN – ELECTRICAL PART A
1/8" = 1'-0"

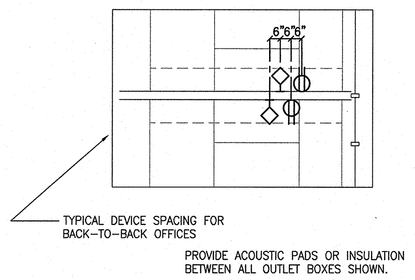

2 / E300 TYPICAL OFFICE LAYOUT
NOT TO SCALE

GENERAL NOTES:

1. REFER TO MECHANICAL DRAWINGS FOR EXACT LOCATIONS OF ALL MECHANICAL EQUIPMENT. CONTRACTOR SHALL COORDINATE REQUIREMENTS WITH NAMEPLATE DATA OF ACTUAL EQUIPMENT PROVIDED.
2. PROVIDE TYPEWRITTEN, UPDATED PANEL SCHEDULES IN ALL PANELBOARDS AFFECTED BY THIS FITUP.
3. SPECIFIC REQUIREMENTS REGARDING MATERIALS, WORKMANSHIP AND THE WORK TO BE DONE ARE COVERED BY THE SPECIFICATIONS WHICH COMPLEMENT THE PLANS. WORK CALLED FOR BY THE SPECIFICATIONS OR THE PLAN IS REQUIRED THE SAME AS IF REQUIRED BY BOTH. WHERE A CONFLICT EXISTS BETWEEN THE PLANS AND SPECIFICATIONS, THE MORE STRINGENT REQUIREMENTS OF THE TWO SHALL APPLY UNLESS SPECIFICALLY APPROVED IN WRITING BY THE ARCHITECT/ENGINEER.

KEY NOTES:

1. PROVIDE 2" CONDUIT WITH PULLSTRING AT TELEPHONE BACKBOARD SHOWN TO BUILDING TELEPHONE SERVICE ENTRANCE. COORDINATE EXACT ROUTING REQUIREMENTS AND SERVICE ENTRANCE LOCATION WITH OWNER REPRESENTATIVE.
2. COORDINATE DEVICE VOLTAGE, AMP RATING TYPE, AND ASSOCIATED BRANCH CIRCUIT REQUIRED WITH EQUIPMENT PROVIDED.
3. PROVIDE CEILING MOUNTED DUPLEX/TELE DATA DEVICE AS SHOWN. COORDINATE EXACT LOCATION AND REQUIREMENTS WITH OWNER REPRESENTATIVE PRIOR TO INSTALLATION.
4. PROVIDE CEILING MOUNTED RECEPTACLE AND CABLE TV JACK FOR TELEVISION MONITOR. COORDINATE EXACT LOCATION AND REQUIREMENTS WITH ARCHITECT PRIOR TO INSTALLATION.
5. CONTRACTOR SHALL COORDINATE EXACT LOCATIONS OF FLOOR OUTLET DEVICES WITH TENANT'S REPRESENTATIVE PRIOR TO INSTALLING.
6. PROJECTION SCREEN. PROVIDE THREE-POSITION LIMIT SWITCH WHERE SHOWN. COORDINATE EXACT LOCATION AND REQUIREMENTS WITH OWNER REPRESENTATIVE PRIOR TO INSTALLATION.
7. PROVIDE 40A/3ø CIRCUIT BREAKER AND 3#8,10G-3/4"C TO KILN EQUIPMENT. COORDINATE EXACT REQUIREMENTS WITH ACTUAL EQUIPMENT PROVIDED.

HESM&A
CONSULTING ENGINEERS
ATLANTA - JACKSON - CHARLOTTE
125 COLLIER ROAD
ATLANTA, GA 30309-2036
(404) 352-5300 - FAX (404) 352-0969
GEORGIA BOARD NO. - 559

NOT FOR CONSTRUCTION

© 2010 SIZEMORE GROUP

GEORGIA REGISTERED PROFESSIONAL ENGINEER THOMAS L. PAYNE

Drawn: ZHL
Checked: JSN
Date: 11/01/10
Job No.: 09121POWDER

Revisions:

No.	Date

POWDER SPRINGS STATION RENOVATION – SENIOR CENTER
1150 POWDER SPRINGS STREET – MARIETTA, GEORGIA 30060

THE DRAWINGS AND SPECIFICATIONS AS INSTRUMENTS OF SERVICE ARE THE PROPERTY OF THE ARCHITECT AND SHALL NOT BE USED BY ANY PERSON FOR ANY PURPOSE OTHER THAN THE SPECIFIED PROJECT WITHOUT THE WRITTEN CONSENT OF THE ARCHITECT.

sizemoregroup

Title: FLOOR PLAN ELECTRICAL PART A

Scale: 1/8" = 1'-0"

Sheet: E300

of:

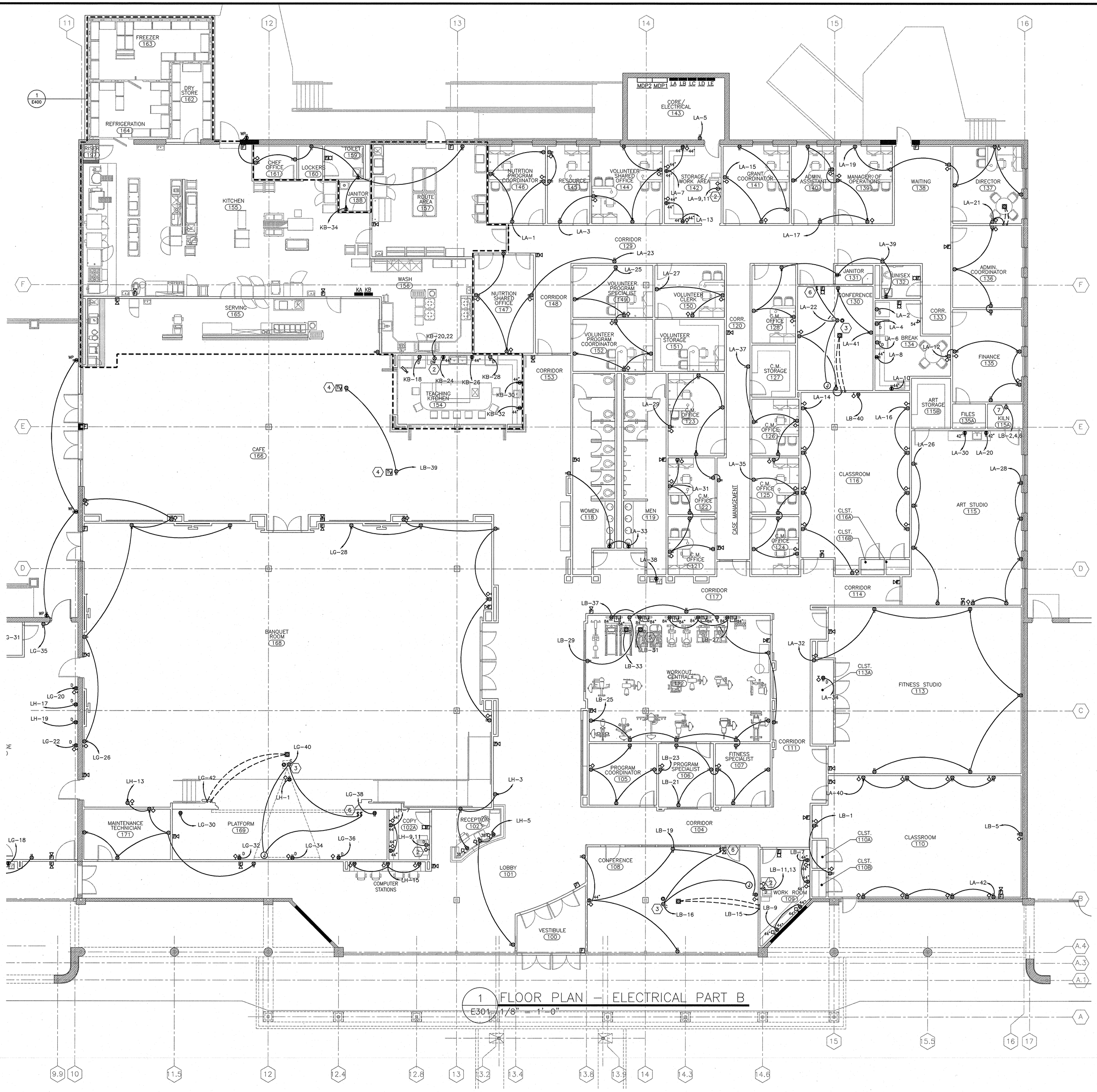

1 FLOOR PLAN – ELECTRICAL PART B
E301 1/8" = 1'-0"

GENERAL NOTES:

1. REFER TO MECHANICAL DRAWINGS FOR EXACT LOCATIONS OF ALL MECHANICAL EQUIPMENT. CONTRACTOR SHALL COORDINATE REQUIREMENTS WITH NAMEPLATE DATA OF ACTUAL EQUIPMENT PROVIDED.
2. PROVIDE TYPEWRITTEN, UPDATED PANEL SCHEDULES IN ALL PANELBOARDS AFFECTED BY THIS FITUP.
3. SPECIFIC REQUIREMENTS REGARDING MATERIALS, WORKMANSHIP AND THE WORK TO BE DONE ARE COVERED BY THE SPECIFICATIONS WHICH COMPLEMENT THE PLANS. WORK CALLED FOR BY THE SPECIFICATIONS OR THE PLAN IS REQUIRED THE SAME AS IF REQUIRED BY BOTH. WHERE A CONFLICT EXISTS BETWEEN THE PLANS AND SPECIFICATIONS, THE MORE STRINGENT REQUIREMENTS OF THE TWO SHALL APPLY UNLESS SPECIFICALLY APPROVED IN WRITING BY THE ARCHITECT/ENGINEER.

KEY NOTES:

1. PROVIDE 2" CONDUIT WITH PULLSTRING AT TELEPHONE BACKBOARD SHOWN TO BUILDING TELEPHONE SERVICE ENTRANCE. COORDINATE EXACT ROUTING REQUIREMENTS AND SERVICE ENTRANCE LOCATION WITH OWNER REPRESENTATIVE.
2. COORDINATE DEVICE VOLTAGE, AMP RATING TYPE, AND ASSOCIATED BRANCH CIRCUIT REQUIRED WITH EQUIPMENT PROVIDED.
3. PROVIDE CEILING MOUNTED DUPLEX/TELE DATA DEVICE AS SHOWN. COORDINATE EXACT LOCATION AND REQUIREMENTS WITH OWNER REPRESENTATIVE PRIOR TO INSTALLATION.
4. PROVIDE CEILING MOUNTED RECEPTACLE AND CABLE TV JACK FOR TELEVISION MONITOR. COORDINATE EXACT LOCATION AND REQUIREMENTS WITH ARCHITECT PRIOR TO INSTALLATION.
5. CONTRACTOR SHALL COORDINATE EXACT LOCATIONS OF FLOOR OUTLET DEVICES WITH TENANT'S REPRESENTATIVE PRIOR TO INSTALLING.
6. PROJECTION SCREEN. PROVIDE THREE-POSITION LIMIT SWITCH WHERE SHOWN. COORDINATE EXACT LOCATION AND REQUIREMENTS WITH OWNER REPRESENTATIVE PRIOR TO INSTALLATION.
7. PROVIDE 40A/3ø CIRCUIT BREAKER AND 3#8,10G-3/4"C TO KILN EQUIPMENT. COORDINATE EXACT REQUIREMENTS WITH ACTUAL EQUIPMENT PROVIDED.

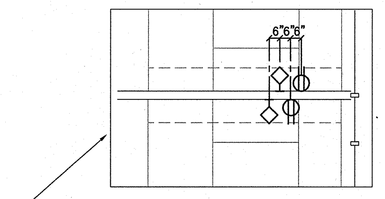

TYPICAL DEVICE SPACING FOR BACK-TO-BACK OFFICES

PROVIDE ACOUSTIC PADS OR INSULATION BETWEEN ALL OUTLET BOXES SHOWN.

2 TYPICAL OFFICE LAYOUT
E301 NOT TO SCALE

HESM&A
CONSULTING ENGINEERS
ATLANTA - JACKSON - CHARLOTTE
1255 COLLIER ROAD
ATLANTA, GA 30318-2308
(404) 352-3200 - FAX (404) 352-0959
GEORGIA BOARD NO. - 939
ATL0112

© 2010 SIZEMORE GROUP

GEORGIA REGISTERED PROFESSIONAL ENGINEER THOMAS L. EVANS 12/13/10

Drawn: ZHL
Checked: JSN
Date: 12/13/10
Job No.: 09121POWDER

Revisions:

No.	Date

POWDER SPRINGS STATION RENOVATION – SENIOR CENTER
1150 POWDER SPRINGS STREET – MARIETTA, GEORGIA 30060

THE SIGNS AND SEALS REPRESENTED BY STAMPS ON THESE DOCUMENTS ARE THE PROPERTY OF THE ARCHITECT OR ENGINEER WHOSE NAME APPEARS ON THE DOCUMENT. THESE DOCUMENTS ARE NOT TO BE REPRODUCED OR ALTERED WITHOUT THE EXPRESSED WRITTEN PERMISSION OF THE ARCHITECT.

sizemoregroup

Title: FLOOR PLAN ELECTRICAL PART B
Scale: 1/8" = 1'-0"
Sheet: E301
of:

KITCHEN EQUIPMENT ELECTRICAL CONNECTION SCHEDULE

ITEM #	DESCRIPTION	WIRING	VOLTAGE/PH.	HP/FLA/KW	CIRCUIT	DISCONNECT/FUSES	NOTES
E1	FLY FAN	2#12, #12G – 1/2"C	120/1	7.5 FLA	KA–1	20A MOTOR–RATED SWITCH	2,7,11
E3	STEAM JACKETED KETTLE	3#3, #8G – 1 1/4"C	208/3	59.0 FLA	KC–1,3,5	100A/3P/NF	2,7
E5	TILT SKILLET	3#4, #10G – 1 1/4"C	208/3	43.0 FLA	KC–7,9,11	60A/3P/NF	2,7
E7	CONVECTION OVEN	2#12, #12G – 1/2"C	120/1	9.8 FLA	KC–15	CORD AND PLUG	2,15
E7	CONVECTION OVEN	2#12, #12G – 1/2"C	120/1	9.8 FLA	KA–17	CORD AND PLUG	2,15
E8	CONVECTION OVEN	2#12, #12G – 1/2"C	120/1	9.8 FLA	KC–16	CORD AND PLUG	2,15
E8	CONVECTION OVEN	2#12, #12G – 1/2"C	120/1	9.8 FLA	KA–21	CORD AND PLUG	2,15
E9	COMBI–OVEN	3#1, #6G – 1 1/2"C	208/3	37.0 KW	KC–2,4,6	200A/3P/NF	2,7
E12	COOK/HOLD OVEN	2#8, #10G – 3/4"C	208/1	6.0 KW	KC–8,10	60A/2P/NF	2,7
E13	EXHAUST HOOD	2#10, #10G – 1/2"C	120/1	20.0 FLA	KA–33	20A MOTOR–RATED SWITCH	2,7,13,14
E16	FLOOR MIXER	2#12, #12G – 1/2"C	120/1	9.5 FLA	KA–35	20A MOTOR–RATED SWITCH	2,7,11
E22	PROOFER	2#12, #12G – 1/2"C	120/1	12.0 FLA	KA–37	CORD AND PLUG	2,15
E24	WARMING/HOLDING CABINET	2#12, #12G – 1/2"C	120/1	16.0 FLA	KA–39	CORD AND PLUG	2,15
E25	DISPOSER	2#12, #12G – 1/2"C	208/1	12.1 FLA	KC–12,14	20A MOTOR–RATED SWITCH	2,7,11
E27	FOOD PROCESSOR	2#12, #12G – 1/2"C	120/1	4.8 FLA	KA–41	CORD AND PLUG	2,15
E29	SLICER	2#12, #12G – 1/2"C	120/1	3.0 FLA	KA–6	CORD AND PLUG	2,15
E34	HOT WELL STATION	2#12, #12G – 1/2"C	208/1	9.6 FLA	KA–8,10	CORD AND PLUG	2,3
E35	CONVEYOR		208/3		KB–38,40,42		2,7
E35	CONVEYOR	2#12, #12G – 1/2"C	120/1	1/2 HP	KB–39		2,7
E37	AIR COMPRESSOR	2#12, #12G – 1/2"C	120/1	15.0 FLA	KB–41		2,7
E38	SEALER	2#12, #12G – 1/2"C	120/1	8.0 FLA	KB–36		2,7
E39	PASS–THRU HEATED CAB.	2#12, #12G – 1/2"C	208/1	7.8 FLA	KA–12,14	CORD AND PLUG	2,3
E41	PASS–THRU REFRIGERATOR	2#12, #12G – 1/2"C	120/1	7.2 FLA	KA–16	CORD AND PLUG	2,15
E43	ICE MAKER	2#12, #12G – 1/2"C	120/1	12.7 FLA	KA–18	CORD AND PLUG	2,15
E44	BLAST CHILLER	2#12, #12G – 1/2"C	120/1	15.2 FLA	KA–20	CORD AND PLUG	2,15
E46	REACH–IN REFRIGERATOR	2#12, #12G – 1/2"C	120/1	10.4 FLA	KA–22	CORD AND PLUG	2,15
E52	REACH–IN REFRIGERATOR	2#12, #12G – 1/2"C	120/1	10.4 FLA	KA–24	CORD AND PLUG	2,15
E53	MILK COOLER	2#12, #12G – 1/2"C	120/1	6.3 FLA	KA–26	CORD AND PLUG	2,15
E58	MICROWAVE	2#12, #12G – 1/2"C	120/1	1.2 KW	KA–28	CORD AND PLUG	2,15
E64	WALL SPRAY SYSTEM	2#12, #12G – 1/2"C	208/1	15.0 FLA	KA–30,32	CORD AND PLUG	2,3 (GFI RECP)
E67	DISPOSER	2#12, #12G – 1/2"C	208/1	12.1 FLA	KA–34,36	20A MOTOR–RATED SWITCH	2,7,11
E69	DISHWASHER	3#4, #8G – 1 1/4"C	208/3	15.0 FLA	KA–38,40,42	100A/3P/NF	2,7
E73	HEAT PLATE DISPENSER	2#12, #12G – 1/2"C	120/1	4.2 FLA	KB–1	CORD AND PLUG	2,15
E84	EXHAUST HOOD	2#12, #12G – 1/2"C	120/1	20.0 FLA	KB–3	20A MOTOR–RATED SWITCH	2,7,13,14
E85	INDUCTION COOKER	2#12, #12G – 1/2"C	120/1	1.8 KW	KC–13	CORD AND PLUG	2,15
E89	HEAT PLATE DISPENSER	2#12, #12G – 1/2"C	120/1	4.2 FLA	KB–7	CORD AND PLUG	2,15
E91							
E92	HOT FOOD STATION	2#6, #10G – 3/4"C	208/1	29.0 FLA	KB–9,11	CORD AND PLUG (NEMA 14–50P)	2,3
E94	COLD FOOD STATION	2#12, #12G – 1/2"C	120/1	1/4 HP	KB–13	CORD AND PLUG	2,15
E95	DROP IN HOT WELLS	2#12, #12G – 1/2"C	120/1	6.3 FLA	KB–15	20A MOTOR–RATED SWITCH	2,7,11
E97	BUFFET WATRMER	2#12, #12G – 1/2"C	120/1	1.0 KW	KB–17	CORD AND PLUG	2,15
E98	SELF SERVER MERCH.	2#12, #12G – 1/2"C	120/1	15.0 FLA	KB–19	CORD AND PLUG	2,15
E99	P.O.S.	2#12, #12G – 1/2"C	120/1	10.0 FLA	KB–21	CORD AND PLUG	2,15,16,17
E101	CASHIER STATION	2#12, #12G – 1/2"C	120/1	9.8 FLA	KB–23	CORD AND PLUG	2,15,16,17
E103	REFRIGERATED DISPLAY	2#12, #12G – 1/2"C	120/1	4.4 FLA	KB–25	CORD AND PLUG	2,15
E104	BEVERAGE COUNTER	2#12, #12G – 1/2"C	120/1	10.0 FLA	KB–27	CORD AND PLUG	
E107	COFFEE MAKER	2#8, #10G – 3/4"C	208/1	6.2 FLA	KB–29,31	40A MOTOR–RATED SWITCH	2,7,11
E109	ICE TEA BREWER	2#12, #12G – 1/2"C	120/1	1.9 KW	KB–33	CORD AND PLUG	2,15
E110	MICROWAVE	2#12, #12G – 1/2"C	120/1	1.2 KW	KB–35	CORD AND PLUG	2,15
E111	ICE MAKER DISPENSER	2#12, #12G – 1/2"C	120/1	6.0 FLA	KB–37	CORD AND PLUG	2,15
W1	WALK–IN COOLER	2#12, #12G – 1/2"C	120/1	1.0 KW	KB–2	20A MOTOR–RATED SWITCH	2,4,5,7,11,12
W1b	EVAPORATOR COIL	2#12, #12G – 1/2"C	120/1	1.0 FLA	KB–4	20A MOTOR–RATED SWITCH	2,4,5,7,11,12
W1c	CONDENSING UNIT	2#12, #12G – 1/2"C	208/1	1 1/2 HP	KB–6,8	20A MOTOR–RATED SWITCH	2,4,5,7,11,12
W2	WALK–IN FREEZER	2#12, #12G – 1/2"C	120/1	1.0 KW	KB–10	20A MOTOR–RATED SWITCH	2,4,5,7,11,12
W2b	EVAPORATOR COIL	2#12, #12G – 1/2"C	120/1	1.0 KW	KB–12	20A MOTOR–RATED SWITCH	2,4,5,7,11,12
W2c	CONDENSING UNIT	2#6, #10G – 1"C	208/1	3 HP	KB–14,16	60A/2P/NF	2,4,5,7,11,12

GENERAL NOTES:

1. CONTRACTOR SHALL COORDINATE ALL EQUIPMENT REQUIREMENTS AND LOCATIONS WITH THE KITCHEN VENDOR'S EQUIPMENT DRAWINGS. ALL DISCONNECT AND SERVICE REQUIREMENTS SHALL BE COORDINATED WITH MANUFACTURER'S CUTSHEETS FOR ACTUAL EQUIPMENT PROVIDED. PROVIDE HARDWIRED CONNECTION OR RECEPTACLE AS NOTED COORDINATE ROUGH–IN LOCATIONS WITH ACTUAL EQUIPMENT PROVIDED.
2. ALL RECEPTACLES IN KITCHEN SHALL BE GFCI.

NOTES:

1. CONTRACTOR SHALL WIRE THE LIMIT SWITCH (PROVIDED BY UNIT) SO THAT THE FANS OPERATE ONLY WHEN THE DOORS ARE OPEN.
2. PROVIDE DISCONNECT REQUIRED BY LOCAL AUTHORITY.
3. 20A/2P 208V NEMA RECEPTACLE. VERIFY COMPATIBLE CORD AND PLUG SET.
4. CONTRACTOR SHALL MAKE CONNECTION FROM JUNCITON BOX TO COOLER LIGHTS, SWITCH, DOOR HEATER AND COIL.
5. DEVICE HAS TWO (2) SEPARATE ELECTRICAL CONNECTIONS.
6. PROVIDE ONE (1) 20A DUPLEX RECEPTACLE FOR BOTH PIECES OF EQUIPMENT.
7. CONTRACTOR SHALL MAKE CONNECTION FROM JUNCTION BOX TO EQUIPMENT.
8. PROVIDE 30A/3P/NEMA 3R/NF DISCONNECT SWITCH.
9. CONTRACTOR SHALL MAKE CONNECTION FROM JUNCTION BOX TO FREEZER LIGHTS, SWITCH AND DOOR HEATER.
10. CONTRACTOR SHALL MAKE CONNECTION TO FREEZER COMPRESSOR AND TO FREEZER COIL (208/1ø).
11. PROVIDE MOTOR–RATED DISCONNECT SWITCH.
12. EXTEND WIRING TO LIGHT SWITCH AT DOOR.
13. PROVIDE SHUNT TRIP AND CONTROL WIRING TO QUENCHER CONTROL CABINET TO SHUT OFF COOKING EQUIPMENT.
14. PROVIDE PILOT LIGHT SWITCH FOR EXHAUST HOOD LIGHTS AND ALL FAN CONTROLS.
15. 20A/1P 120V NEMA RECEPTACLE. VERY COMPATIBLE CORD AND PLUG SET.
16. PROVIDE DATA OUTLET.
17. PROVIDE IG DEVICE FOR ALL POS STATIONS.

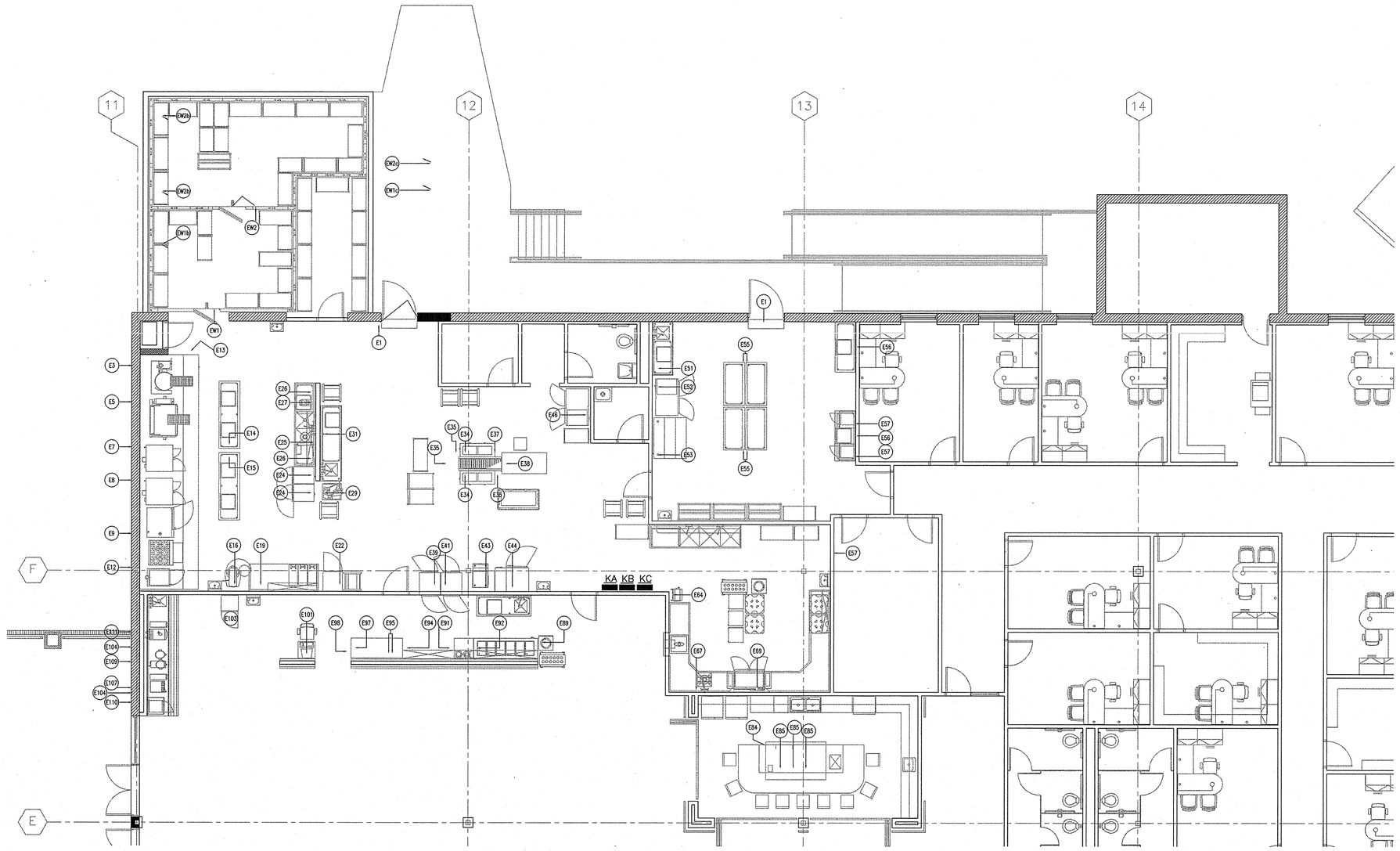

1 / E400 KITCHEN PLAN – ELECTRICAL
1/4" = 1'–0"

PANEL KA

VOLTAGE (L–N): 120 | ENCLOSURE TYPE: ----
VOLTAGE (L–L): 208 | MONITOR: SURFACE
PHASES, WIRES: 3 ø, 4 W | AIC RATING (A): 42000
MINIMUM BUS CAPACITY (A): 400 A | NOTES: * PROVIDE SHUNT TRIP CIRCUIT BREAKER.
MAIN O.C. DEVICE (A): 400 A MLO

CKT NO	DESCRIPTION	TRIP AMPS	POLE	PHASE LOADS (VA) A		B		C		POLE	TRIP AMPS	DESCRIPTION	CKT NO
1	FLY FAN	20	1	900	0					1	20	SPARE	2
3	SPARE	20	1			0	0			1	20	SPARE	4
5	SPARE	20	1					0	400	1	20	SLICER	6
7	SPARE	20	1	0	1000					2	20	HOT WELL STATION	8,10
9	SPARE	20	1			0	1000			2	20	HOT WELL STATION	8,10
11	SPARE	20	1					0	800	2	20	PASS–THRU HEATED CABINET	12,14
13	SPARE	20	1	0	800					2	20	PASS–THRU HEATED CABINET	12,14
15	SPARE	20	1			0	900			1	20	PASS–THRU REFRIGERATOR	16
17	CONVECTION OVEN	20	1					1200	1500	1	20	ICE MAKER	18
19	SPARE	20	1	0	1800					1	20	BLAST CHILLER	20
21	CONVECTION OVEN	20	1			1200	1200			1	20	REACH–IN REFRIGERATOR	22
23	SPARE	20	1					0	1200	1	20	REACH–IN REFRIGERATOR	24
25	SPARE	20	1	0	800					1	20	MILK COOLER	26
27	SPARE	20	1			0	1200			1	20	MICROWAVE	28
29	SPARE	20	1					0	1600	2	20	WALL MOUNT SPRAY SYS	30,32
31	SPARE	20	1	0	1600					2	20	WALL MOUNT SPRAY SYS	30,32
33	EXHAUST HOOD	20	1			1900	1300			2	20	DISPOSER	34,36
35	FLOOR MIXER	20	1					1100	1300	2	20	DISPOSER	34,36
37	PROOFER	20	1	1400	6600					3	70	DISHWASHER/BOOSTER HTR	38,40,42
39	WARMING/HOLDING CABINET	20	1			1900	6600			3	70	DISHWASHER/BOOSTER HTR	38,40,42
41	FOOD PROCESSOR	20	1					600	6600	3	70	DISHWASHER/BOOSTER HTR	38,40,42
FTL	PANEL KB	400	3	16800	----					----	----	----	----
FTL	PANEL KB	400	3			19860	----			----	----	----	----
FTL	PANEL KB	400	3					15760					
				CONNECTED LOAD PHASE TOTALS (VA)									
				31700		37060		32060					

	CONNECTED LOAD (KVA)	DEMAND FACTOR	DEMAND LOAD (KVA)
KITCHEN EQUIPMENT – NON–DWELLING UNIT	93.6	0.65	60.8
RECEPTACLES (0 – 10 KVA)	7.3	1.00	7.3
TOTAL:	100.8		68.1
LOAD (AMPS):	279.9		189.0

DEMAND LOAD	68.1 KVA
SPARE CAPACITY	76.0 KVA
SPARE CAPACITY	211.0 AMPS
SPARE CAPACITY	53 %
PHASE BALANCE	
A TO B	86 %
B TO C	87 %
C TO A	99 %

PANEL KB

VOLTAGE (L–N): 120 | ENCLOSURE TYPE: ----
VOLTAGE (L–L): 208 | MONITOR: SURFACE
PHASES, WIRES: 3 ø, 4 W | AIC RATING (A): 42000
MINIMUM BUS CAPACITY (A): 400 A | NOTES: * PROVIDE SHUNT TRIP CIRCUIT BREAKER.
MAIN O.C. DEVICE (A): 400 A MLO

CKT NO	DESCRIPTION	TRIP AMPS	POLE	PHASE LOADS (VA) A		B		C		POLE	TRIP AMPS	DESCRIPTION	CKT NO
1	HEAT PLATE DISPENSER	20	1	500	1000					1	20	WALK–IN COOLER	2
3	EXHAUST HOOD	20	1			1900	600			1	20	EVAPORATOR COIL	4
5	SPARE	20	1					0	1700	2	20	CONDENSING UNIT	6,8
7	HEAT PLATE DISPENSER	20	1	500	1700					2	20	CONDENSING UNIT	6,8
9,11	HOT FOOD STATION	50	2			3000	1000			1	20	WALK–IN FREEZER	10
9,11	HOT FOOD STATION	50	2					3000	600	1	20	EVAPORATOR COIL	12
13	COLD FOOD STATION	20	1	700	3800					2	50	CONDENSING UNIT	14,16
15	DROP IN HOT WELLS	20	1			1000	3800			2	50	CONDENSING UNIT	14,16
17	BUFFET WARMER	20	1					400	600	1	20	TEACHING KITCHEN 154	18
19	SELF SERVER MERCHANDISE	20	1	1800	1200					2	20	TEACHING KITCHEN 154	20,22
21	P.O.S.	20	1			1200	1200			2	20	TEACHING KITCHEN 154	20,22
23	CASHIER STATION	20	1					1200	600	1	20	TEACHING KITCHEN 154	24
25	REFRIGERATED DISPLAY CASE	20	1	600	600					1	20	TEACHING KITCHEN 154	26
27	BEVERAGE COUNTER	20	1			1200	600			1	20	TEACHING KITCHEN 154	28
29,31	COFFEE MAKER	40	2					3100	600	1	20	TEACHING KITCHEN 154	30
29,31	COFFEE MAKER	40	2	3100	600					1	20	TEACHING KITCHEN 154	32
33	ICE TEA BREWER	20	1			1900	1260			1	20	JANITOR 156	34
35	MICROWAVE	20	1					1200	960	1	20	SEALER	36
37	ICE MAKER DISPENER	20	1	700	0					3	20	CONVEYOR	38,40,42
39	CONVEYOR	20	1			1200	0			3	20	CONVEYOR	38,40,42
41	AIR COMPRESSOR	20	1					1800	0	3	20	CONVEYOR	38,40,42
				CONNECTED LOAD PHASE TOTALS (VA)									
				16800		19960		15760					

	CONNECTED LOAD (KVA)	DEMAND FACTOR	DEMAND LOAD (KVA)
KITCHEN EQUIPMENT – NON–DWELLING UNIT	45.2	0.65	29.4
RECEPTACLES (0 – 10 KVA)	7.3	1.00	7.3
TOTAL:	52.4		36.6
LOAD (AMPS):	145.5		101.6

DEMAND LOAD	36.6 KVA
SPARE CAPACITY	107.5 KVA
SPARE CAPACITY	298.4 AMPS
SPARE CAPACITY	75 %
PHASE BALANCE	
A TO B	85 %
B TO C	79 %
C TO A	94 %

PANEL KC

VOLTAGE (L–N): 120 | ENCLOSURE TYPE: ----
VOLTAGE (L–L): 208 | MONITOR: SURFACE
PHASES, WIRES: 3 ø, 4 W | AIC RATING (A): 42000
MINIMUM BUS CAPACITY (A): 200 A | NOTES: ----
MAIN O.C. DEVICE (A): 200 A MLO

CKT NO	DESCRIPTION	TRIP AMPS	POLE	PHASE LOADS (VA) A		B		C		POLE	TRIP AMPS	DESCRIPTION	CKT NO
1,3,5	STEAM JACKETED KETTLE	80	3	7100	12000					3	125	COMBI–OVEN	2,4,6
1,3,5	STEAM JACKETED KETTLE	80	3			7100	12000			3	125	COMBI–OVEN	2,4,6
1,3,5	STEAM JACKETED KETTLE	80	3					7100	12000	3	125	COMBI–OVEN	2,4,6
7,9,11	TILT KETTLE	60	3	5100	3000					2	40	COOK/HOLD OVEN	8,10
7,9,11	TILT KETTLE	60	3			5100	3000			2	40	COOK/HOLD OVEN	8,10
7,9,11	TILT KETTLE	60	3					5100	1300	2	20	DISPOSER	12,14
13	INDUCTION COOKER	20	1	1800	1200					2	20	DISPOSER	12,14
15	CONVECTION OVEN	20	1			1200	1200			1	20	CONVECTION OVEN	16
17	SPARE	20	1					0	0	1	20	SPARE	18
19	SPARE	20	1	0	0					1	20	SPARE	20
21	SPARE	20	1			0	0			1	20	SPARE	22
23	SPARE	20	1					0	0	1	20	SPARE	24
25	SPARE	20	1	0	0					1	20	SPARE	26
27	SPARE	20	1			0	0			1	20	SPARE	28
29	SPARE	20	1					0	0	1	20	SPARE	30
31	SPARE	20	1	0	0					1	20	SPARE	32
33	SPARE	20	1			0	0			1	20	SPARE	34
35	SPARE	20	1					0	0	1	20	SPARE	36
37	SPARE	20	1	0	0					1	20	SPARE	38
39	SPARE	20	1			0	0			1	20	SPARE	40
41	SPARE	20	1					0	0	1	20	SPARE	42
				CONNECTED LOAD PHASE TOTALS (VA)									
				30200		29600		25500					

	CONNECTED LOAD (KVA)	DEMAND FACTOR	DEMAND LOAD (KVA)
KITCHEN EQUIPMENT – NON–DWELLING UNIT	85.3	0.65	55.4
TOTAL:	85.3		55.4
LOAD (AMPS):	236.8		153.9

DEMAND LOAD	55.4 KVA
SPARE CAPACITY	16.6 KVA
SPARE CAPACITY	46.1 AMPS
SPARE CAPACITY	23 %
PHASE BALANCE	
A TO B	98 %
B TO C	86 %
C TO A	84 %

HESM&A
CONSULTING ENGINEERS
ATLANTA - JACKSON - CHARLOTTE
125 COLLIER ROAD
ATLANTA, GA 30309-2208
(404) 355-5300 - FAX (404) 355-0909
GEORGIA BOARD NO. - 959
ATG0112

© 2010 SIZEMORE GROUP

GEORGIA REGISTERED PROFESSIONAL ENGINEER No. 23962 THOMAS J. SIZEMORE

Drawn: ZHL
Checked: JSN
Date: 12/13/10
Job No.: 09121POWDER

Revisions:

No.	Date

POWDER SPRINGS STATION RENOVATION – SENIOR CENTER
1150 POWDER SPRINGS STREET – MARIETTA, GEORGIA 30060

THE DRAWING IS AN INSTRUMENT OF SERVICE THAT MAY BE PROTECTED BY COPYRIGHT LAW. THE DRAWING, IN WHOLE OR IN PART, MAY NOT BE REPRODUCED OR USED FOR ANY PURPOSE WITHOUT THE WRITTEN PERMISSION OF THE ARCHITECT.

sizemore group

Title: KITCHEN PLAN – ELECTRICAL
Scale: 1/4" = 1'–0"
Sheet: E400
of:

DISTRIBUTION PANEL MDP1

CKT NO	TRIP	POLE	DESCRIPTION	DEMAND LOAD (VA)
1	200	3	PANEL LA	49530
2	400	3	PANEL LC	104100
3	200	3	PANEL LE	7693
4	200	3	RTU-3	61920
5	250	3	RTU-5	69840
6	300	3	RTU-6	96840
7	0	3	SPACE	0
8	0	3	SPACE	0

LOAD CATEGORY	CONNECTED LOAD (KVA) X	DEMAND FACTOR =	DEMAND LOAD (KVA)
COOLING AND HEATING	228.6	1.00	228.6
EQUIPMENT	0.2	1.00	0.2
HEATING	83.1	1.00	83.1
LIGHTING	23.1	1.25	28.9
MOTORS	16.3	1.00	16.3
MOTORS (LARGEST)	3.6	1.25	4.5
RECEPTACLES (0 – 10 KVA)	10.0	1.00	10.0
RECEPTACLES (OVER 10 KVA)	36.6	0.50	18.3

TOTAL CONN. LOAD (KVA): 401.6 — TOTAL DEMAND LOAD (KVA): 389.9 — TOTAL DEMAND LOAD (AMPS): 1082.3

MOUNTING: SURFACE | 120/208 VAC | 1200 A MCB | 3 ø, 4 W | 65000 AIC RATING

GFCI DISTRIBUTION PANEL

DISTRIBUTION PANEL MDP2

CKT NO	TRIP	POLE	DESCRIPTION	DEMAND LOAD (VA)
1	200	3	PANEL LG	42006
2	400	3	PANEL LK	129925
3	400	3	PANEL KA	66074
4	150	3	RTU-4	43920
5	125	3	RTU-7	35280
*6	200	3	PANEL KC	55445
7	0	3	SPACE	0

LOAD CATEGORY	CONNECTED LOAD (KVA) X	DEMAND FACTOR =	DEMAND LOAD (KVA)
COOLING AND HEATING	79.2	1.00	79.2
EQUIPMENT	2.6	1.00	2.6
HEATING	114.7	1.00	114.7
LIGHTING	12.3	1.25	15.4
KITCHEN EQUIPMENT – NON-DWELLING UNIT	178.9	0.65	116.3
MOTORS	13.9	1.00	13.9
MOTORS (LARGEST)	0.9	1.25	1.1
RECEPTACLES (0 – 10 KVA)	10.0	1.00	10.0
RECEPTACLES (OVER 10 KVA)	35.7	0.50	17.8

TOTAL CONN. LOAD (KVA): 448.2 — TOTAL DEMAND LOAD (KVA): 371.0 — TOTAL DEMAND LOAD (AMPS): 1029.9

MOUNTING: SURFACE | 120/208 VAC | 1200 A MCB | 3 ø, 4 W | 65000 AIC RATING

GFCI DISTRIBUTION PANEL
* PROVIDE SHUNT TRIP CIRCUIT BREAKER.

PANEL LA

VOLTAGE (L–N): 120 — ENCLOSURE TYPE: ----
VOLTAGE (L–L): 208 — MONITOR: SURFACE
PHASES, WIRES: 3 ø, 4 W — AIC RATING (A): 42000
MINIMUM BUS CAPACITY (A): 200 A — NOTES: ----
MAIN O.C. DEVICE (A): 200 A MLO

CKT NO	DESCRIPTION	TRIP AMPS	POLE	A		B		C		POLE	TRIP AMPS	DESCRIPTION	CKT NO
1	NUTRITION 146 RECP	20	1	1080	180					1	20	BREAK RM 134	2
3	RESOURCE 145 RECP	20	1			900	180			1	20	BREAK RM 134	4
5	ELECTRICAL 143 RECP	20	1					180	180	1	20	BREAK RM 134	6
7	WORK AREA 142 RECP	20	1	360	180					1	20	BREAK RM 134	8
9,11	WORK AREA 142 RECP	20	2			1600	180			1	20	BREAK RM 134	10
9,11	WORK AREA 142 RECP	20	2					1600	900	1	20	BREAK RM 134	12
13	WORK AREA 142 RECP	20	1	360	900					1	20	CLASSROOM 116 RECP	14
15	COORDINATOR 141 RECP	20	1			720	720			1	20	CLASSROOM 116 RECP	16
17	ADMIN 140 RECP	20	1					1080	0	1	20	SPARE	18
19	OPERATIONS 139 RECP	20	1	1080	180					1	20	ART STUDIO 115 RECP	20
21	DIRECTOR 137 RECP	20	1			1260	1200			1	20	CONF. 130 PROJECTOR	22
23	CORRIDOR 129 RECP	20	1					900	0	1	20	SPARE	24
25	PROGRAM SPECIALIST 140 RECP	20	1	1260	720					1	20	ART STUDIO 115 RECP	26
27	CLERK 150 RECP	20	1			360	900			1	20	ART STUDIO 115 RECP	28
29	C.M. OFFICE 123 RECP	20	1					1080	180	1	20	ART STUDIO 115 RECP	30
31	C.M. OFFICE 123 RECP	20	1	900	1080					1	20	FITNESS STUDIO 113 RECP	32
33	MAN 119 RECP	20	1			540	360			1	20	FITNESS STUDIO 113A RECP	34
35	C.M. OFFICE 125 RECP	20	1					1080	0	1	20	FITNESS STUDIO 113A RECP	36
37	C.M. OFFICE 127 RECP	20	1	900	180					1	20	DRINKING FOUNTAIN 117	38
39	CORRIDOR 129 RECP	20	1			900	720			1	20	CLASS ROOM 110 RECP	40
41	CONF. RM 130 RECP	20	1					1080	720	1	20	CLASS ROOM 110 RECP	42
FTL	PANEL LB	200	3	11836	----					----	----	----	----
FTL	PANEL LB	200	3			11686	----			----	----	----	----
FTL	PANEL LB	200	3					11206					
				CONNECTED LOAD PHASE TOTALS (VA)									
				21196		22226		20186					

	CONNECTED LOAD (KVA)	DEMAND FACTOR	DEMAND LOAD (KVA)
LIGHTING	17.0	1.25	21.2
RECEPTACLES (0 – 10 KVA)	10.0	1.00	10.0
RECEPTACLES (OVER 10 KVA)	36.6	0.50	18.3
TOTAL:	63.6		49.5
LOAD (AMPS):	176.6		137.5

DEMAND LOAD	49.5 KVA
SPARE CAPACITY	22.5 KVA
SPARE CAPACITY	62.5 AMPS
SPARE CAPACITY	31 %
PHASE BALANCE	
A TO B	95 %
B TO C	91 %
C TO A	95 %

PANEL LB

VOLTAGE (L–N): 120 — ENCLOSURE TYPE: ----
VOLTAGE (L–L): 208 — MONITOR: SURFACE
PHASES, WIRES: 3 ø, 4 W — AIC RATING (A): 42000
MINIMUM BUS CAPACITY (A): 200 A — NOTES: ----
MAIN O.C. DEVICE (A): 200 A MLO

CKT NO	DESCRIPTION	TRIP AMPS	POLE	A		B		C		POLE	TRIP AMPS	DESCRIPTION	CKT NO
1	CLASSROOM 110 RECP	20	1	360	2200					3	40	KILN 115A RECP	2,4,6
3	SPARE	20	1			0	2200			3	40	KILN 115A RECP	2,4,6
5	CLASSROOM 110 RECP	20	1					180	2200	3	40	KILN 115A RECP	2,4,6
7	WORK RM 109 RECP	20	1	360	1116					1	20	KITCHEN 155 LTG	8
9	WORK RM 109 RECP	20	1			360	1680			1	20	KITCHEN 155 LTG	10
11,13	WORK RM 109 COPIER	20	2					1200	1716	1	20	SERVING 165 LTG	12
11,13	WORK RM 109 COPIER	20	2	0	592					1	20	CORRIDOR 153 LTG	14
15	CONF. 108 RECP	20	1			600	1878			1	20	CORRIDOR 153 LTG	16
17	CONF. 108 PROJECTOR RECP	20	1					0	1088	1	20	CORRIDOR 153 LTG	18
19	CONF. 108 RECP	20	1	900	1408					1	20	CORRIDOR 153 LTG	20
21	SPECIALIST 106 RECP	20	1			1080	332			1	20	CORRIDOR 153 LTG	22
23	SPECIALIST 106 RECP	20	1					900	798	1	20	CORRIDOR 153 LTG	24
25	WORKOUT CENTRAL 112 RECP	20	1	1080	0					1	20	CORRIDOR 153 LTG	26
27	WORKOUT CENTRAL 112 RECP	20	1			540	576			1	20	PROGRAM CORRIDOR 146 LTG	28
29	WORKOUT CENTRAL 112 RECP	20	1					900	1776	1	20	ELECTRICAL RM 143 LTG	30
31	WORKOUT CENTRAL 112 RECP	20	1	600	912					1	20	WAITING 138 LTG	32
33	WORKOUT CENTRAL 112 RECP	20	1			600	1300			1	20	WAITING 138 LTG	34
35	SPARE	20	1					0	448	1	20	WAITING 138 LTG	36
37	WORKOUT CENTRAL 112 RECP	20	1	360	1948					1	20	EM. OFFICE LTG	38
39	CAFE 166 RECP	20	1			360	180			1	20	CLASSROOM 116 RECP	40
41	SPARE	20	1					0	0	1	20	SPARE	42
				CONNECTED LOAD PHASE TOTALS (VA)									
				11836		11686		11206					

	CONNECTED LOAD (KVA)	DEMAND FACTOR	DEMAND LOAD (KVA)
LIGHTING	17.0	1.25	21.2
RECEPTACLES (0 – 10 KVA)	10.0	1.00	10.0
RECEPTACLES (OVER 10 KVA)	7.8	0.50	3.9
TOTAL:	34.7		35.1
LOAD (AMPS):	96.4		97.4

DEMAND LOAD	35.1 KVA
SPARE CAPACITY	37.0 KVA
SPARE CAPACITY	102.6 AMPS
SPARE CAPACITY	51 %
PHASE BALANCE	
A TO B	99 %
B TO C	96 %
C TO A	95 %

PANEL LC

VOLTAGE (L–N): 120 — ENCLOSURE TYPE: ----
VOLTAGE (L–L): 208 — MONITOR: SURFACE
PHASES, WIRES: 3 ø, 4 W — AIC RATING (A): 42000
MINIMUM BUS CAPACITY (A): 400 A — NOTES: ----
MAIN O.C. DEVICE (A): 400 A MLO

CKT NO	DESCRIPTION	TRIP AMPS	POLE	A		B		C		POLE	TRIP AMPS	DESCRIPTION	CKT NO
1	TEF-7	20	1	700	1300					3	30	PIU-3-1	2,4,6
3	TEF-8	20	1			600	2200			3	30	PIU-3-1	2,4,6
5	TEF-9	20	1					600	1300	3	30	PIU-3-1	2,4,6
7	EF-2	20	1	700	3200					3	40	PIU-3-2	8,10,12
9,11,13	MAF-1	15	3			700	2300			3	40	PIU-3-2	8,10,12
9,11,13	MAF-1	15	3					700	2300	3	40	PIU-3-2	8,10,12
9,11,13	MAF-1	15	3	700	3600					3	50	PIU-3-3	14,16,18
15,17,19	KEF-1	20	3			1200	4300			3	50	PIU-3-3	14,16,18
15,17,19	KEF-1	20	3					1200	3600	3	50	PIU-3-3	14,16,18
15,17,19	KEF-1	20	3	1200	3000					3	40	PIU-3-4	20,22,24
21	KEF-2	15	1			1200	3000			3	40	PIU-3-4	20,22,24
23	DEF-1	15	1					700	3900	3	40	PIU-3-4	20,22,24
25,27	EWH-2	15	2	1000	3900					3	40	PIU-3-5	26,28,30
25,27	EWH-2	15	2			1000	3000			3	40	PIU-3-5	26,28,30
29,31	ECH-1	40	2					2000	3000	3	40	PIU-3-5	26,28,30
29,31	ECH-1	40	2	2000	4000					3	50	PIU-3-6	32,34,36
33	DOC-1	20	1			200	4900			3	50	PIU-3-6	32,34,36
35	SPARE	20	1					0	4000	3	50	PIU-3-6	32,34,36
37	SPARE	20	1	0	2200					3	30	PIU-3-7	38,40,42
39	SPARE	20	1			0	1300			3	30	PIU-3-7	38,40,42
41	SPARE	20	1					0	1300	3	30	PIU-3-7	38,40,42
FTL	PANEL LD	200	3	8600	----					----	----	----	----
FTL	PANEL LD	200	3			9500	----			----	----	----	----
FTL	PANEL LD	200	3					7100					
				CONNECTED LOAD PHASE TOTALS (VA)									
				36100		35400		31700					

	CONNECTED LOAD (KVA)	DEMAND FACTOR	DEMAND LOAD (KVA)
EQUIPMENT	0.2	1.00	0.2
HEATING	83.1	1.00	83.1
MOTORS	16.3	1.00	16.3
MOTORS (LARGEST)	3.6	1.25	4.5
TOTAL:	103.2		104.1
LOAD (AMPS):	286.5		289.0

DEMAND LOAD	104.1 KVA
SPARE CAPACITY	40.0 KVA
SPARE CAPACITY	111.0 AMPS
SPARE CAPACITY	28 %
PHASE BALANCE	
A TO B	98 %
B TO C	90 %
C TO A	88 %

PANEL LD

VOLTAGE (L–N): 120 — ENCLOSURE TYPE: ----
VOLTAGE (L–L): 208 — MONITOR: SURFACE
PHASES, WIRES: 3 ø, 4 W — AIC RATING (A): 42000
MINIMUM BUS CAPACITY (A): 400 A — NOTES: ----
MAIN O.C. DEVICE (A): 400 A MLO

CKT NO	DESCRIPTION	TRIP AMPS	POLE	A		B		C		POLE	TRIP AMPS	DESCRIPTION	CKT NO
1,3,5	PIU-3-8	40	3	2600	0					1	20	SPARE	2
1,3,5	PIU-3-8	40	3			2600	0			1	20	SPARE	4
1,3,5	PIU-3-8	40	3					3500	0	1	20	SPARE	6
7,9,11	PIU-3-9	30	3	3600	0					1	20	SPARE	8
7,9,11	PIU-3-9	30	3			4500	0			1	20	SPARE	10
7,9,11	PIU-3-9	30	3					3600	0	1	20	SPARE	12
13,15,17	PIU-3-10	30	3	900	0					1	20	SPARE	14
13,15,17	PIU-3-10	30	3			0	0			1	20	SPARE	16
13,15,17	PIU-3-10	30	3					0	0	1	20	SPARE	18
19,21	PIU-3-11	20	2	1500	0					1	20	SPARE	20
19,21	PIU-3-11	20	2			2400	0			1	20	SPARE	22
23	SPARE	20	1					0	0	1	20	SPARE	24
25	SPARE	20	1	0	0					1	20	SPARE	26
27	SPARE	20	1			0	0			1	20	SPARE	28
29	SPARE	20	1					0	0	1	20	SPARE	30
31	SPARE	20	1	0	0					1	20	SPARE	32
33	SPARE	20	1			0	0			1	20	SPARE	34
35	SPARE	20	1					0	0	1	20	SPARE	36
37	SPARE	20	1	0	0					1	20	SPARE	38
39	SPARE	20	1			0	0			1	20	SPARE	40
41	SPARE	20	1					0	0	1	20	SPARE	42
				CONNECTED LOAD PHASE TOTALS (VA)									
				8600		9500		7100					

	CONNECTED LOAD (KVA)	DEMAND FACTOR	DEMAND LOAD (KVA)
HEATING	21.6	1.00	21.6
MOTORS	2.7	1.00	2.7
MOTORS (LARGEST)	0.9	1.25	1.1
TOTAL:	25.2		25.4
LOAD (AMPS):	70.0		70.6

DEMAND LOAD	25.4 KVA
SPARE CAPACITY	118.7 KVA
SPARE CAPACITY	329.4 AMPS
SPARE CAPACITY	82 %
PHASE BALANCE	
A TO B	91 %
B TO C	75 %
C TO A	83 %

PANEL LE

VOLTAGE (L–N): 120 — ENCLOSURE TYPE: ----
VOLTAGE (L–L): 208 — MONITOR: SURFACE
PHASES, WIRES: 3 ø, 4 W — AIC RATING (A): 42000
MINIMUM BUS CAPACITY (A): 200 A — NOTES: ----
MAIN O.C. DEVICE (A): 200 A MLO

CKT NO	DESCRIPTION	TRIP AMPS	POLE	A		B		C		POLE	TRIP AMPS	DESCRIPTION	CKT NO
1	CLASSROOM 116 LTG	20	1	1496	0					1	20	SPARE	2
3	WORKOUT CENTRAL 112 LTG	20	1			1416	0			1	20	SPARE	4
5	CLASSROOM 110 LTG	20	1					2152	0	1	20	SPARE	6
7	WORKROOM 109 LTG	20	1	1090	0					1	20	SPARE	8
9	SPARE	20	1			0	0			1	20	SPARE	10
11	SPARE	20	1					0	0	1	20	SPARE	12
13	SPARE	20	1	0	0					1	20	SPARE	14
15	SPARE	20	1			0	0			1	20	SPARE	16
17	SPARE	20	1					0	0	1	20	SPARE	18
19	SPARE	20	1	0	0					1	20	SPARE	20
21	SPARE	20	1			0	0			1	20	SPARE	22
23	SPARE	20	1					0	0	1	20	SPARE	24
25	SPARE	20	1	0	0					1	20	SPARE	26
27	SPARE	20	1			0	0			1	20	SPARE	28
29	SPARE	20	1					0	0	1	20	SPARE	30
31	SPARE	20	1	0	0					1	20	SPARE	32
33	SPARE	20	1			0	0			1	20	SPARE	34
35	SPARE	20	1					0	0	1	20	SPARE	36
37	SPARE	20	1	0	0					1	20	SPARE	38
39	SPARE	20	1			0	0			1	20	SPARE	40
41	SPARE	20	1					0	0	1	20	SPARE	42
				CONNECTED LOAD PHASE TOTALS (VA)									
				2586		1416		2152					

	CONNECTED LOAD (KVA)	DEMAND FACTOR	DEMAND LOAD (KVA)
LIGHTING	6.2	1.25	7.7
TOTAL:	6.2		7.7
LOAD (AMPS):	17.1		21.4

DEMAND LOAD	7.7 KVA
SPARE CAPACITY	64.4 KVA
SPARE CAPACITY	178.6 AMPS
SPARE CAPACITY	89 %
PHASE BALANCE	
A TO B	55 %
B TO C	66 %
C TO A	83 %

PANEL LG

VOLTAGE (L–N): 120 — ENCLOSURE TYPE: ----
VOLTAGE (L–L): 208 — MONITOR: SURFACE
PHASES, WIRES: 3 ø, 4 W — AIC RATING (A): 42000
MINIMUM BUS CAPACITY (A): 200 A — NOTES: ----
MAIN O.C. DEVICE (A): 200 A MLO

CKT NO	DESCRIPTION	TRIP AMPS	POLE	A		B		C		POLE	TRIP AMPS	DESCRIPTION	CKT NO
1	PERSONAL CARE 193 RECP	20	1	540	600					1	20	DAY RM 175 RECP	2
3,5	DRYER 193 RECP	20	2			1600	600			1	20	DAY RM 175 RECP	4
3,5	DRYER 193 RECP	20	2					1600	600	1	20	DAY RM 175 RECP	6
7	PERSONAL CARE 193 RECP	20	1	600	600					1	20	DRINKING FOUNTAIN 175	8
9	DRINKING FOUNTAIN 188	20	1			600	900			1	20	MEN 178 RECP	10
11	ACTIVITY 188 RECP	20	1					540	900	1	20	OFFICE 177 RECP	12
13	ACTIVITY 188 RECP	20	1	600	900					1	20	OFFICE 176 RECP	14
15	ACTIVITY 188 RECP	20	1			600	900			1	20	STORAGE 170 RECP	16
17	ACTIVITY 188 RECP	20	1					600	600	1	20	DRINKING FOUNTAIN 172	18
19	CRAFT RM 190 RECP	20	1	600	600					1	20	STORAGE 170 RECP	20
21	CRAFT RM 190 RECP	20	1			600	600			1	20	STORAGE 170 RECP	22
23	CRAFT RM 190 RECP	20	1					600	1200	1	20	WATER HEATER J-BOX 196	24
25	CRAFT RM 190 RECP	20	1	720	1080					1	20	BANQUET 168 RECP	26
27	STORAGE 182 RECP	20	1			700	1080			1	20	BANQUET 168 RECP	28
29	PORCH AREA 181 RECP	20	1					1080	360	1	20	PLATFORM 169 RECP	30
31	WATER HEATER J-BOX 196	20	1	1200	360					1	20	PLATFORM 169 RECP	32
33	UNISEX 184 RECP	20	1			720	360			1	20	PLATFORM 169 RECP	34
35	STORAGE 170/DINING RECP	20	1					720	360	1	20	PLATFORM 169 RECP	36
37	OFFICE RM 186 RECP	20	1	900	360					1	20	PLATFORM 169 RECP	38
39	OFFICE RM 187 RECP	20	1			900	600			1	20	PLATFORM 169 RECP	40
41	DAY ROOM 175 RECP	20	1					540	360	1	20	PLATFORM 169 RECP	42
FTL	PANEL LF	200	3	8198	----					----	----	----	----
FTL	PANEL LF	200	3			7710	----			----	----	----	----
FTL	PANEL LF	200	3					6749					
				CONNECTED LOAD PHASE TOTALS (VA)									
				17858		18470		16809					

	CONNECTED LOAD (KVA)	DEMAND FACTOR	DEMAND LOAD (KVA)
EQUIPMENT	2.4	1.00	2.4
LIGHTING	12.3	1.25	15.4
RECEPTACLES (0 – 10 KVA)	10.0	1.00	10.0
RECEPTACLES (OVER 10 KVA)	28.4	0.50	14.2
TOTAL:	53.1		42.0
LOAD (AMPS):	147.5		116.6

DEMAND LOAD	42.0 KVA
SPARE CAPACITY	30.0 KVA
SPARE CAPACITY	83.4 AMPS
SPARE CAPACITY	42 %
PHASE BALANCE	
A TO B	97 %
B TO C	91 %
C TO A	94 %

PANEL LH

VOLTAGE (L–N): 120 — ENCLOSURE TYPE: ----
VOLTAGE (L–L): 208 — MONITOR: SURFACE
PHASES, WIRES: 3 ø, 4 W — AIC RATING (A): 42000
MINIMUM BUS CAPACITY (A): 200 A — NOTES: ----
MAIN O.C. DEVICE (A): 200 A MLO

CKT NO	DESCRIPTION	TRIP AMPS	POLE	A		B		C		POLE	TRIP AMPS	DESCRIPTION	CKT NO
1	BANQUET 168 RECP	20	1	360	1216					1	20	CRAFT RM 190 LTG	2
3	RECEPTION 102 RECP	20	1			540	1632			1	20	DINING ACTIVITY 188 LTG	4
5	RECEPTION 102 RECP	20	1					540	996	1	20	OFFICE RM 187 LTG	6
7	COPY 102A RECP	20	1	600	1032					1	20	DAY RM 175 LTG	8
9,11	COPY 102A RECP	20	2			1600	1024			1	20	OFFICE RM 176 LTG	10
9,11	COPY 102A RECP	20	2					1600	791	1	20	PORCH 181 LTG	12
13	MAINTENANCE TECH 171 RECP	20	1	1080	116					1	20	CORRIDOR 172 LTG	14
15	COMPUTER STATIONS	20	1			1080	328			1	20	STORAGE 170 LTG	16
17	STORAGE 170 RECP	20	1					1200	192	1	20	SPARE	18
19	STORAGE 170 RECP	20	1	1200	1344					1	20	CLINIC 174 LTG	20
21	STORAGE 182 RECP	20	1			360	640			1	20	PLATFORM 169 LTG	22
23	STORAGE 182 RECP	20	1					180	1250	1	20	PLATFORM 169 LTG	24
25	SPARE	20	1	0	1250					1	20	PLATFORM 169 LTG	26
27	SPARE	20	1			0	506			1	20	CORRIDOR LTG	28
29	SPARE	20	1					0	0	1	20	SPARE	30
31	SPARE	20	1	0	0					1	20	SPARE	32
33	SPARE	20	1			0	0			1	20	SPARE	34
35	SPARE	20	1					0	0	1	20	SPARE	36
37,39,41	DIMMING PANEL LP1	60	3	0	0					1	20	SPARE	38
37,39,41	DIMMING PANEL LP1	60	3			0	0			1	20	SPARE	40
37,39,41	DIMMING PANEL LP1	60	3					0	0	1	20	SPARE	42
				CONNECTED LOAD PHASE TOTALS (VA)									
				8198		7710		6749					

	CONNECTED LOAD (KVA)	DEMAND FACTOR	DEMAND LOAD (KVA)
LIGHTING	12.3	1.25	15.4
RECEPTACLES (0 – 10 KVA)	10.0	1.00	10.0
RECEPTACLES (OVER 10 KVA)	0.3	0.50	0.2
TOTAL:	22.7		25.6
LOAD (AMPS):	62.9		71.0

DEMAND LOAD	25.6 KVA
SPARE CAPACITY	46.5 KVA
SPARE CAPACITY	129.0 AMPS
SPARE CAPACITY	65 %
PHASE BALANCE	
A TO B	94 %
B TO C	88 %
C TO A	82 %

HESM&A
CONSULTING ENGINEERS
ATLANTA - JACKSON - CHARLOTTE
125 COLLIER ROAD
ATLANTA, GA 30309-2398
(404) 352-5300 - FAX (404) 352-0969
GEORGIA BOARD NO. - 559
ATG012

© 2010
SIZEMORE GROUP

GEORGIA REGISTERED PROFESSIONAL ENGINEER No. 25055 THOMAS L. EVANS

Drawn: ZHL
Checked: JSN
Date: 12/13/10
Job No.: 09121POWDER

Revisions:

No.	Date

POWDER SPRINGS STATION RENOVATION – SENIOR CENTER
1150 POWDER SPRINGS STREET – MARIETTA, GEORGIA 30060

THE DRAWINGS AND SPECIFICATIONS AT INSTANT SIZEMORE GROUP ARE THE PROPERTY OF SIZEMORE GROUP AND SHALL NOT BE USED FOR ANY PURPOSE NOT SPECIFICALLY AGREED TO IN WRITING BY SIZEMORE GROUP. ALL REPRODUCTIONS, COPIES OR SIMILAR DOCUMENTS MUST BEAR THE SIZEMORE GROUP LEGEND.

sizemoregroup

Title: ELECTRICAL SCHEDULES

Scale: NOT TO SCALE

Sheet

DIMMING PANEL LP1

CIRCUIT	ZONE	PRESET #	DESCRIPTION	LOCATION	FEED TYPE	LOAD TYPE	NO. OF FIXTURES	WATTS PER FIXTURE	TOTAL WATTS NORMAL	NOTES	VOLTS
LP1-1	Z1	–	C1-DOWNLIGHT	BANQUET ROOM 168	N	FLUOR	21	64	1344	–	–
LP1-2	Z1	–	C1E-DOWNLIGHT	BANQUET ROOM 168	E	FLUOR	13	64	832	–	–
LP1-3	Z2	–	V-CHANDELIER/ F-COVE LIGHT	BANQUET ROOM 168	N	INC/ LED	3/ 33FT	360/ 3 PER FT	1179	–	–
LP1-4	Z2	–	V-CHANDELIER/ F-COVE LIGHT	BANQUET ROOM 168	N	INC/ LED	3/ 33FT	360/ 3 PER FT	1179	–	–
LP1-5	Z1	–	C1-DOWNLIGHT	BANQUET ROOM 168	N	FLUOR	3	64	192	–	–
LP1-6	Z1	–	C1-DOWNLIGHT	BANQUET ROOM 168	N	FLUOR	21	64	1344	–	–
LP1-7	Z1	–	C1E-DOWNLIGHT	BANQUET ROOM 168	E	FLUOR	13	64	832	–	–
LP1-8	Z1	–	V-CHANDELIER/ F-COVE LIGHT	BANQUET ROOM 168	N	INC/ LED	3/ 33FT	360/ 3 PER FT	1179	–	–
LP1-9	Z2	–	V-CHANDELIER/ F-COVE LIGHT	BANQUET ROOM 168	N	INC/ LED	3/ 33FT	360/ 3 PER FT	1179	–	–
LP1-10	Z3	–	C1/C1E-DOWNLIGHT	BANQUET ROOM 168	N/E	FLUOR	12/1	64	768	–	–
LP1-11	Z3	–	C1-DOWNLIGHT	BANQUET ROOM 168	N	FLUOR	12	64	768	–	–
LP1-12	Z4	–	P-SCONCE	BANQUET ROOM 168	N	FLUOR	6	24	144	–	–
LP1-13	Z5	–	F1-COVE LIGHT	BANQUET ROOM 168	N	LED	140FT	3 PER FT	420	–	–
LP1-14	Z6	–	TRACK LIGHT	BANQUET ROOM 168	N	PAR 38	5	250	1250	–	–
–	–	–	–	–	–	–	–	–	–	–	–
–	–	–	–	–	–	–	–	–	–	–	–
–	–	–	–	–	–	–	–	–	–	–	–
–	–	–	–	–	–	–	–	–	–	–	–
–	–	–	–	–	–	–	–	–	–	–	–
–	–	–	–	–	–	–	–	–	–	–	–
–	–	–	–	–	–	–	–	–	–	–	–
–	–	–	–	–	–	–	–	–	–	–	–
–	–	–	–	–	–	–	–	–	–	–	–
–	–	–	–	–	–	–	–	–	–	–	–
–	–	–	–	–	–	–	–	–	–	–	–
TOTALS									26.9		
120/208V, 3 PHASE, 4 WIRE						MAIN CIRCUIT BREAKER AMPS:			60A		

NOTES:
1. NON DIMMABLE CIRCUIT

SYMBOL KEY

- △ TWO POWER CONDUCTORS AND DATA CABLE. SEE PRODUCT DATA SHEETS FOR TYPE AND SIZE.
- ○ CLASS 1 WIRING 2 CONDUCTORS.
- ● CLASS 1 WIRING 3 CONDUCTORS.
- □ CLASS 1 WIRING UNIT FEED.
- ■ #1B AWG MINIMUM CLASS 2 WIRING. SEE INPUT SCHEDULE FOR QTY OF CONDUCTORS.
- ◆ #1B AWG MINIMUM CLASS 2 WIRING 3 CONDUCTORS PER DEVICE.
- ▲ CAT 5 OR CAT 5E NETWORK CABLE.

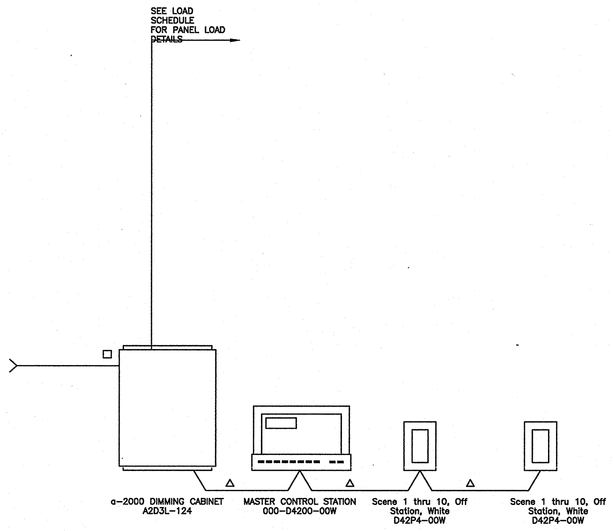

PANEL LK

VOLTAGE (L-N):	120	ENCLOSURE TYPE:	----
VOLTAGE (L-L):	208	MONITOR:	SURFACE
PHASES, WIRES:	3 ø, 4 W	AIC RATING (A):	42000
MINIMUM BUS CAPACITY (A):	400 A	NOTES:	----
MAIN O.C. DEVICE (A):	400 A MLO		

CKT NO	DESCRIPTION	TRIP AMPS	POLE	PHASE LOADS (VA) A	B	C	POLE	TRIP AMPS	DESCRIPTION	CKT NO
1	TEF-4	20	1	700 4000			3	50	PIU-6-5	2,4,6
3	TEF-5	20	1		600 4900		3	50	PIU-6-5	2,4,6
5	TEF-6	20	1			600 4000	3	50	PIU-6-5	2,4,6
7	EF-3	20	1	600 3900			3	40	PIU-6-6	8,10,12
9,11	EWH-1	20	2		1000 3000		3	40	PIU-6-6	8,10,12
9,11	EWH-1	20	2			1000 3000	3	40	PIU-6-6	8,10,12
13	DDC-2	20	1	200 2600			3	40	PIU-6-7	14,16,18
15	SPARE	20	1		0 3500		3	40	PIU-6-7	14,16,18
17,19,21	PIU-6-1	50	3			7500 2600	3	40	PIU-6-7	14,16,18
17,19,21	PIU-6-1	50	3	6600 1600			3	30	PIU-6-8	20,22,24
17,19,21	PIU-6-1	50	3		6600 1600		3	30	PIU-6-8	20,22,24
23,25,27	PIU-6-2	50	3			0 2500	3	30	PIU-6-8	20,22,24
23,25,27	PIU-6-2	50	3	0 2600			3	40	PIU-6-9	26,28,30
23,25,27	PIU-6-2	50	3		900 3500		3	40	PIU-6-9	26,28,30
29,31,33	PIU-6-3	40	3			5200 2600	3	40	PIU-6-9	26,28,30
29,31,33	PIU-6-3	40	3	4300 5200			3	60	PIU-6-10	32,34,36
29,31,33	PIU-6-3	40	3		4300 4300		3	60	PIU-6-10	32,34,36
35,37,39	PIU-6-4	30	3			0 4300	3	60	PIU-6-10	32,34,36
35,37,39	PIU-6-4	30	3	0 2000			3	30	PIU-6-11	38,40,42
35,37,39	PIU-6-4	30	3		900 2900		3	30	PIU-6-11	38,40,42
41	SPARE	20	1			0 2000	3	30	PIU-6-11	38,40,42
FTL	PANEL LH	200	3	8400 ----			----	----	----	----
FTL	PANEL LH	200	3		6900 ----		----	----	----	----
FTL	PANEL LH	200	3			6800	----	----	----	----
				CONNECTED LOAD PHASE TOTALS (VA)						
				42700	44900	42100				

	CONNECTED LOAD (KVA)	DEMAND FACTOR	DEMAND LOAD (KVA)
EQUIPMENT	0.2	1.00	0.2
HEATING	114.7	1.00	114.7
MOTORS	13.9	1.00	13.9
MOTORS (LARGEST)	0.9	1.25	1.1
TOTAL:	129.7		129.9
LOAD (AMPS):	360.0		360.6

DEMAND LOAD	129.9	KVA
SPARE CAPACITY	14.2	KVA
SPARE CAPACITY	39.4	AMPS
SPARE CAPACITY	10	%
PHASE BALANCE		
A TO B	95	%
B TO C	94	%
C TO A	99	%

PANEL LL

VOLTAGE (L-N):	120	ENCLOSURE TYPE:	----
VOLTAGE (L-L):	208	MONITOR:	SURFACE
PHASES, WIRES:	3 ø, 4 W	AIC RATING (A):	42000
MINIMUM BUS CAPACITY (A):	400 A	NOTES:	----
MAIN O.C. DEVICE (A):	400 A MLO		

CKT NO	DESCRIPTION	TRIP AMPS	POLE	PHASE LOADS (VA) A	B	C	POLE	TRIP AMPS	DESCRIPTION	CKT NO
1,3	PIU-6-12	20	2	1700 0			1	20	SPARE	2
1,3	PIU-6-12	20	2		1000 0		1	20	SPARE	4
5,7,9	PIU-6-13	50	3			3600 0	1	20	SPARE	6
5,7,9	PIU-6-13	50	3	4400 0			1	20	SPARE	8
5,7,9	PIU-6-13	50	3		3600 0		1	20	SPARE	10
11,13,15	PIU-6-14	40	3			3200 0	1	20	SPARE	12
11,13,15	PIU-6-14	40	3	2300 0			1	20	SPARE	14
11,13,15	PIU-6-14	40	3		2300 0		1	20	SPARE	16
17	SPARE	20	1			0 0	1	20	SPARE	18
19	SPARE	20	1	0 0			1	20	SPARE	20
21	SPARE	20	1		0 0		1	20	SPARE	22
23	SPARE	20	1			0 0	1	20	SPARE	24
25	SPARE	20	1	0 0			1	20	SPARE	26
27	SPARE	20	1		0 0		1	20	SPARE	28
29	SPARE	20	1			0 0	1	20	SPARE	30
31	SPARE	20	1	0 0			1	20	SPARE	32
33	SPARE	20	1		0 0		1	20	SPARE	34
35	SPARE	20	1			0 0	1	20	SPARE	36
37	SPARE	20	1	0 0			1	20	SPARE	38
39	SPARE	20	1		0 0		1	20	SPARE	40
41	SPARE	20	1			0 0	1	20	SPARE	42
				CONNECTED LOAD PHASE TOTALS (VA)						
				8400	6900	6800				

	CONNECTED LOAD (KVA)	DEMAND FACTOR	DEMAND LOAD (KVA)
HEATING	19.7	1.00	19.7
MOTORS	1.5	1.00	1.5
MOTORS (LARGEST)	0.9	1.25	1.1
TOTAL:	22.1		22.3
LOAD (AMPS):	61.3		62.0

DEMAND LOAD	22.3	KVA
SPARE CAPACITY	121.8	KVA
SPARE CAPACITY	338.0	AMPS
SPARE CAPACITY	85	%
PHASE BALANCE		
A TO B	82	%
B TO C	99	%
C TO A	81	%

MECHANICAL EQUIPMENT ELECTRICAL CONNECTION SCHEDULE

ITEM #	DESCRIPTION	WIRING	VOLTAGE/PH.	HP/FLA/KW	CIRCUIT	DISCONNECT/FUSES	LOCATION	NOTES
TEF-4	TOILET EXHAUST FAN	2#12, #12G – 1/2"C	120/1	1/4 HP	LK-1	NOTE 6	ROOF – OVER RR 192	1,5,6,10
TEF-5	TOILET EXHAUST FAN	2#12, #12G – 1/2"C	120/1	1/6 HP	LK-3	NOTE 6	ROOF – OVER RR 184	1,5,6,10
TEF-6	TOILET EXHAUST FAN	2#12, #12G – 1/2"C	120/1	1/6 HP	LK-5	NOTE 6	ROOF – OVER RR 179	1,5,6,10
TEF-7	TOILET EXHAUST FAN	2#12, #12G – 1/2"C	120/1	1/4 HP	LC-1	NOTE 6	ROOF – OVER RR 118	1,5,6,10
TEF-8	TOILET EXHAUST FAN	2#12, #12G – 1/2"C	120/1	1/6 HP	LC-3	NOTE 6	ROOF – OVER RR 132	1,5,6
TEF-9	TOILET EXHAUST FAN	2#12, #12G – 1/2"C	120/1	1/6 HP	LC-5	NOTE 6	ROOF – OVER RR 159	1,5,6
EF-2	EXHAUST FAN	2#12, #12G – 1/2"C	120/1	1/4 HP	LC-7	NOTE 6	ROOF – OVER ART 115	1,5,6,10
EF-3	EXHAUST FAN	2#12, #12G – 1/2"C	120/1	1/6 HP	LK-7	NOTE 6	ROOF – OVER ART 173	1,5,6
MAF-1	MAKE-UP AIR FAN	3#12, #12G – 1/2"C	208/3	1 1/2 HP	LC-9,11,13	NOTE 6	ROOF – OVER KITCHEN	1,5,6
KEF-1	KITCHEN EXHAUST FAN	2#12, #12G – 1/2"C	208/3	3 HP	LC-15,17,19	NOTE 6	ROOF – OVER KITCHEN	1,5,6
KEF-2	KITCHEN EXHAUST FAN	2#12, #12G – 1/2"C	120/1	1/2 HP	LC-21	NOTE 6	ROOF – OVER KITCHEN	1,5,6
DEF-1	DISHWASHER FAN	2#12, #12G – 1/2"C	120/1	1/4 HP	LC-23	NOTE 6	ROOF – OVER KITCHEN	1,5,6
EWH-1	ELECTRIC WALL HEATER	2#12, #12G – 1/2"C	208/1	2 KW	LK-9,11	NOTE 6	RECEPTION DESK 101	1,4,6
EWH-2	ELECTRIC WALL HEATER	2#12, #12G – 1/2"C	208/1	2 KW	LC-25,27	NOTE 6	WAITING 138	1,4,6
ECH-1	ELECTRIC CEILING HEATER	2#10, #10G – 1/2"C	208/1	4 KW	LC-29,31	NOTE 6	ENTRY VESTIBULE 100	1,4,6
RTU-3	ROOF TOP UNIT	3#3/0, #6G – 2"C	208/3	172 MCA	MDP1-4	NOTE 6	ROOF	1,2,3,4,6,9
RTU-4	ROOF TOP UNIT	3#1/0, #6G – 1 1/2"C	208/3	122 MCA	MDP2-4	NOTE 6	ROOF	1,2,3,4,6,9
RTU-5	ROOF TOP UNIT	3#250, #4G – 2 1/2"C	208/3	194 MCA	MDP1-5	NOTE 6	ROOF	1,2,3,4,6,9
RTU-6	ROOF TOP UNIT	3#350, #4G – 2 1/2"C	208/3	269 MCA	MDP1-6	NOTE 6	ROOF	1,2,3,4,6,9
RTU-7	ROOF TOP UNIT	3#1, #6G – 1 1/4"C	208/3	98 MCA	MDP2-5	NOTE 6	ROOF	1,2,3,4,6,9
DDC-1	DDC CONTROL PANEL	2#12, #12G – 1/2"C	120/1	200 W	LC-33	JUNCTION BOX	JANITOR 131	1
DDC-2	DDC CONTROL PANEL	2#12, #12G – 1/2"C	120/1	200 W	LK-13	JUNCTION BOX	JANITOR 173	1

NOTES:

1. INSTALL OVERCURRENT PROTECTION AND BRANCH CIRCUITS PER UL LISTED REQUIREMENTS FOR EQUIPMENT SERVED. REFER TO EQUIPMENT CUT SHEETS AND MANUFACTURER'S DATA FOR ROUGHIN LOCATIONS OF ELECTRICAL CONNECTIONS AND INTERCONNECTIONS FOR ALL EQUIPMENT. PROVIDE DISCONNECT SWITCH (NON-FUSED, UNLESS NOTED OTHERWISE). COORDINATE EXACT NAMEPLATE DATA OF EQUIPMENT TO BE USED WITH MECHANICAL CONTRACTOR. PROVIDE HACR CIRCUIT BREAKER OR FUSIBLE SWITCH FOR ALL MECHANICAL EQUIPMENT.
2. PROVIDE WP DEVICES (NEMA 3R RATING) IN ALL EXTERIOR OR DAMP LOCATIONS.
3. COORDINATE AND CONNECT DUCT SMOKE DETECTORS AND ASSOCIATED WIRING WHERE REQUIRED BY CODE. DETECTORS SHALL BE PROVIDED BY DIVISION 16, INSTALLED BY DIVISION 15, AND WIRED BY DIVISION 16.
4. MAGNETIC STARTER PROVIDED BY DIVISION 15.
5. PROVIDE MAGNETIC STARTER FOR CONTROL INTERFACE.
6. DISCONNECT PROVIDED WITH EQUIPMENT OR BY DIVISION 15.
7. INTEGRAL DUCT SMOKE DETECTOR PROVIDED IN RETURN. INTERLOCK WITH FIRE ALARM SYSTEM.
8. NOT USED.
9. NOT USED.
10. EXTEND AND CONNECT TO LOCAL LIGHTING BRANCH CIRCUIT.

PIU ELECTRICAL CONNECTION SCHEDULE

MARK	WIRING	CIRCUIT	DISCONNECT	FAN MOTOR H.P.	FAN MOTOR VOLTS/PHASE	HEATING COIL K.W.	HEATING COIL VOLTS/PHASE	REMARKS
PIU-3-1	4#10, #10G – 3/4"C	LC-2,4,6	FBO	1/3	120/1	4.0	208/3	⊙
PIU-3-2	4#8, #10G – 3/4"C	LC-8,10,12	FBO	1/3	120/1	7.0	208/3	⊙
PIU-3-3	4#6, #10G – 1"C	LC-14,16,18	FBO	1/3	120/1	11.0	208/3	⊙
PIU-3-4	4#8, #10G – 3/4"C	LC-20,22,24	FBO	1/3	120/1	9.0	208/3	⊙
PIU-3-5	4#8, #10G – 3/4"C	LC-26,28,30	FBO	1/3	120/1	9.0	208/3	⊙
PIU-3-6	4#6, #10G – 1"C	LC-32,34,36	FBO	1/3	120/1	12.0	208/3	⊙
PIU-3-7	4#10, #10G – 3/4"C	LC-38,40,42	FBO	1/3	120/1	4.0	208/3	⊙
PIU-3-8	4#8, #10G – 3/4"C	LD-1,3,5	FBO	1/3	120/1	8.0	208/3	⊙
PIU-3-9	4#10, #10G – 3/4"C	LD-7,9,11	FBO	1/3	120/1	6.0	208/3	⊙
PIU-3-10	4#10, #10G – 3/4"C	LD-13,15,17	FBO	1/3	120/1	5.0	208/3	⊙
PIU-3-11	3#12, #12G – 1/2"C	LD-19,21	FBO	1/8	120/1	3.0	208/1	⊙
PIU-6-1	4#6, #10G – 1"C	LK-17,19,21	FBO	1/3	120/1	10.0	208/3	⊙
PIU-6-2	4#6, #10G – 1"C	LK-23,25,27	FBO	1/3	120/1	10.0	208/3	⊙
PIU-6-3	4#8, #10G – 3/4"C	LK-29,31,33	FBO	1/3	120/1	9.0	208/3	⊙
PIU-6-4	4#10, #10G – 3/4"C	LK-35,37,39	FBO	1/3	120/1	4.0	208/3	⊙
PIU-6-5	4#6, #10G – 1"C	LK-2,4,6	FBO	1/3	120/1	12.0	208/3	⊙
PIU-6-6	4#8, #10G – 3/4"C	LK-8,10,12	FBO	1/3	120/1	9.0	208/3	⊙
PIU-6-7	4#8, #10G – 3/4"C	LK-14,16,18	FBO	1/3	120/1	8.0	208/3	⊙
PIU-6-8	4#10, #10G – 3/4"C	LK-20,22,24	FBO	1/3	120/1	5.0	208/3	⊙
PIU-6-9	4#8, #10G – 3/4"C	LK-26,28,30	FBO	1/3	120/1	8.0	208/3	⊙
PIU-6-10	4#4, #8G – 1 1/4"C	LK-32,34,36	FBO	1/3	120/1	13.0	208/3	⊙
PIU-6-11	4#10, #10G – 3/4"C	LK-38,40,42	FBO	1/2	120/1	6.0	208/3	⊙
PIU-6-12	3#10, #10G – 3/4"C	LL-1,3	FBO	1/8	120/1	2.0	208/1	⊙
PIU-6-13	4#6, #10G – 1"C	LL-5,7,9	FBO	1/3	120/1	11.0	208/3	⊙
PIU-6-14	4#8, #10G – 3/4"C	LL-11,13,15	FBO	1/3	120/1	7.0	208/3	⊙
----	–	–	–	–	–	–	–	
----	–	–	–	–	–	–	–	
----	–	–	–	–	–	–	–	
----	–	–	–	–	–	–	–	
----	–	–	–	–	–	–	–	

⊙ SINGLE POINT ELECTRICAL CONNECTION WITH FACTORY DISCONNECT (TYPICAL FOR ALL PIU'S)

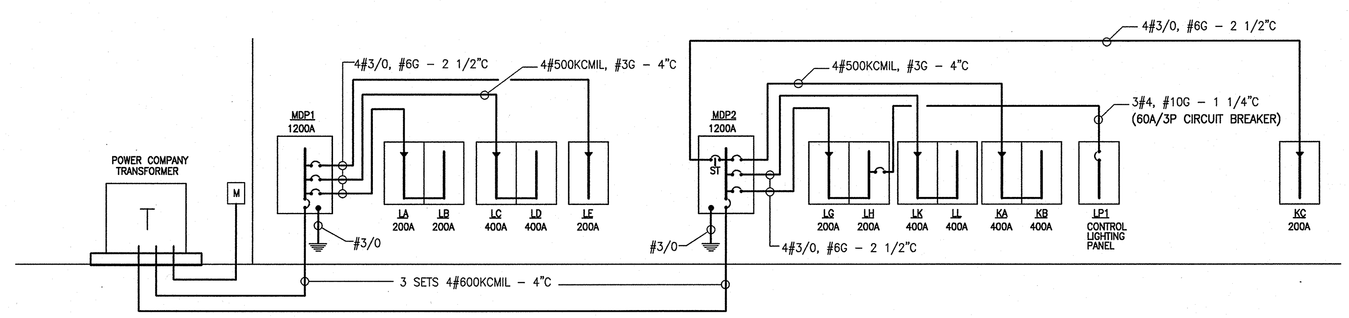

1 / E501 RISER DIAGRAM
NOT TO SCALE

HESM&A
CONSULTING ENGINEERS
ATLANTA - JACKSON - CHARLOTTE
1255 COLLIER ROAD
ATLANTA GA 30318-2208
(404) 355-5300 - FAX (404) 352-0909
GEORGIA BOARD NO. - 559
ATI01LG

© 2010 SIZEMORE GROUP

GEORGIA REGISTERED PROFESSIONAL ENGINEER No. 25365 THOMAS L. CAYSON

Drawn: ZHL
Checked: JSN
Date: 12/13/10
Job No.: 09121POWDER

Revisions:

No.	Date

POWDER SPRINGS STATION RENOVATION – SENIOR CENTER
1150 POWDER SPRINGS STREET – MARIETTA, GEORGIA 30060

THE DRAWINGS AND SPECIFICATIONS AS INSTRUMENTS OF PROFESSIONAL SERVICE ARE THE PROPERTY OF THE ARCHITECT AND ARE TO BE RETURNED UPON REQUEST. THEY ARE NOT TO BE USED ON OTHER PROJECTS OR EXTENSIONS OF THIS PROJECT EXCEPT BY AGREEMENT IN WRITING AND APPROPRIATE COMPENSATION BY THE ARCHITECT.

sizemoregroup

Title: ELECTRICAL SCHEDULES

Scale: NOT TO SCALE

Sheet: E501

of:

MECHANICAL SPECIFICATIONS

PART 1.0 GENERAL

1.1 DESCRIPTION:

A. These plans are schematic in nature and are intended to establish size, general routing and location, and performance and are not intended to show all possible conditions. All work shall be fully coordinated with other trades to insure the installation of a complete, operating system that fits in the space allotted. Provide all labor, equipment, appurtenances and materials necessary, and perform all operations required for the installation of complete, functional mechanical systems as outlined on the drawings and described in the specifications.

B. This project is a tenant improvement of an existing base building shell with existing Mechanical systems to be removed (all existing mechanical work is to be removed for replacement with new complete systems). The space under this scope is currently occupied by or has been previously occupied by an existing tenant, therefore, this project is not a "first generation" fit-up. The exact condition of the existing work is not necessarily reflected in these drawings. Only the approximate conditions of the base building design and previous fit-up designs are reflected in these drawings. Some undocumented work may have been performed, the conditions of which are not indicated on these drawings. Remove existing tenant work not indicated on these drawings and cap and seal connection points to existing work shown. Final work should reflect, as closely as possible, the layout shown of these drawings.

C. Because this project is an adaption to and partial renovation of an existing system, unknown circumstances and interferences may occur. The Contractor shall visit the site prior to any bid submission to familiarize himself with the existing conditions. The contractor shall make adjustments in routing and location and, if necessary, in size, in order to achieve the specified performance without incurring additions to the contract. Where existing conditions differ significantly enough to affect pricing, the contractor shall notify the Architect prior to bid submission for proper resolution. No allowances will be made for lack of knowledge of existing conditions.

D. Existing work (ductwork, piping, devices and equipment) is shown dashed. New or relocated work is shown solid lined. Existing work to be removed is shown cross-hatched or noted. All data for existing work shown (locations, sizes, capacities, etc.) is taken from base building and previous fit-up design drawings (not "As-Built" or shop drawings) and are therefore approximate and for reference only. All data, sizes and exact locations and sizes must be field verified.

E. Refer to architectural floor plans and reflected ceiling plans to coordinate mechanical equipment with layout of walls and partitions and locations of all ceiling mounted devices. For any items not shown on the reflected ceiling plans, prepare drawings of the proposed locations and present to the Architect for approval prior to installation.

F. Due to the fact that areas adjacent to this work area will continue to operate during this construction phase, great care must be taken to maintain a clean job site. Any interruption of services (electricity, fire protection water, domestic water, sewer, gas, air conditioning, HVAC chilled and hot water, and steam and condensate return) to the building shall be coordinated with the Building Owner. Any work that requires activity outside this area shall be coordinated with the Building Owner. Provide barriers, dust enclosures, etc. as required to protect adjacent areas and staff. Provide temporary construction filters to prevent the contamination of adjacent areas and equipment with construction dust at the following locations: over all return or opening in tenant demising partitions, on the return air inlet of all central station air conditioning units serving floors or portions of floors under this scope; and on the return air inlet of all remote auxiliary units serving portions of this tenant space.

G. Contractor shall coordinate all work required for utility service connections (electricity, domestic water, sewer, fire protection water, gas) to the building with the local utility companies and with the local authorities having code jurisdiction.

H. All work shall be done in conformance with these specifications and local codes. Where conflicting requirements may occur, the more stringent shall govern.

I. This project is programmed for LEED Silver certification. All work shall be in conformance with the requirements of the targeted credit points. Refer to architectural LEED checklist for points and requirements. Of particularly importance is systems and equipment efficiencies, optional functionality specified for equipment, the use of only low VOC materials, and water usage efficiency.

1.2 CODES AND REGULATIONS:

A. All Mechanical systems shall be installed in accordance with the locally adopted Building Codes, Mechanical Codes, Energy Codes, Plumbing and Gas Codes, and NFPA (Latest Editions).

B. The Contractor shall obtain all permits and licenses, arrange for all inspections, perform all tests and pay all fees incidental thereto, as required for the execution of the contract and as required by the authorities having jurisdiction.

1.3 SHOP DRAWINGS:

A. Contractor shall submit five (5) copies of descriptive catalogue data for all new equipment and appurtenances to be used on this project. Catalogue data shall include performance data, dimensional data, standard and optional features and appropriate testing agency labels. The shop drawings shall be legible and shall clearly indicate the equipment tag or mark, related specification section, optional features to be provided, and any deviations from the specifications or scheduled capacities noted in red or highlighted. Verification and assignment of dimensions, quantities, and construction means, methods, sequences or procedures shall be the sole responsibility of the Contractor.

B. All submittal data shall be 8-1/2"x11" and shall be bound together in a binder or under a report cover. The submittal sheet(s) for each piece of equipment shall include a blank area 3"x 3", on the front, for review stamp and comments. If the catalog data sheet does not have an open area as specified, provide a cover sheet for that piece of equipment with equipment tag and brief description for review and comment use.

C. Illegible submittals and incomplete submittals (lacking equipment designations, performance data, dimensional data, or indication of optional features) may be summarily rejected without review. Any delay in the construction schedule resulting from rejected submittals is the responsibility of the Contractor for failure to adhere to these specifications.

D. The Contractor shall prepare "As Built" drawings neatly and clearly indicating all design revisions and the actual installed conditions of all Mechanical systems (HVAC, Plumbing and Fire Protection). "As Built" drawings shall not be exact duplicates of design drawings. The Contractor shall submit 3 to 5 copies to the Architect/Engineer for review and comment, and shall provide two record copies (one reproducible and one non-reproducible) to the Owner with all Architectural and Engineering comments incorporated. "As Built" drawings shall bear the name/logo of the Contractor and any stamp from the Engineer of record shall be removed. The Contractor shall obtain approval from the designer for use of design drawing title blocks.

1.4 ELECTRONIC COPIES OF ENGINEERING DESIGN FILES:

A. The Contractor for Division 15 may obtain copies of the Engineer's electronic drawing files. A nominal fee per file may be requested. Plans can be provided in AutoCAD .DWG format in the Engineer's standard cad configuration; conversion to any other format and configuration is the responsibility of the contractor. Non-plan files (specifications, schedules, details, risers, etc.) will be provided in .PDF format only.

B. The Contractor MUST obtain written (email) permission and request these files through proper project channels (via the General Contractor, Architect, and Owner/Landlord). As the backgrounds are not the property of the Engineer, the Architect MUST provide written permission for use and transmission of their files prior to issue.

PART 2.0 PRODUCTS

2.1 DESCRIPTION:

A. All materials and equipment shall be new except those existing items indicated to be re-used. Any equipment or devices to be re-used shall be thoroughly cleaned and serviced to good working condition. All new equipment shall bear the label of the appropriate testing agency (UL, ETL, FM, CSA, AGA, ASTM, AMCA, PDI, CISPI, etc.). Provide one (1) year parts and labor warranty on all new equipment, systems and components, including workmanship. Warranty period shall be one (1) year from date of substantial completion.

B. The products of particular manufacturers have been used as the basis of design. Any modifications required to the mechanical system, electrical system, building structure or finishes due to the use of equipment other than the basis of design shall be coordinated with all trades and performed without additional cost to the contract.

C. All construction products installed within return air plenums shall be plenum rated materials with a maximum flame spread/smoke developed rating of 25/50.

2.2 EQUIPMENT:

A. Mechanical equipment shall be as indicated in the equipment schedule. Coordinate with electrical before ordering equipment requiring electrical connections. Equipment with motors shall be provided with built-in starters and disconnect switches, unless indicated otherwise on the drawings.

B. Air distribution devices shall be as indicated in the equipment schedule. Coordinate mounting frames to match the surface in which the devices are installed. Coordinate finish and color with the architect. All 2X2 lay-in diffusers shall have 4-way adjustable throw, unless noted otherwise. Devices shall be as manufactured by Titus or approved equivalent by Carnes, J&J Register, Krueger, MetalMaire, or Price.

2.3 DUCTWORK AND ACCESSORIES:

A. All new supply and return air ductwork shall be G90 galvanized sheet steel, fabricated and installed in accordance with SMACNA pressure rating classification and code. Fiberglass duct board is prohibited. Ductwork shall be rectangular or round as indicated; round equivalent may be substituted for rectangular only where specifically indicated or with prior approval. Sizes indicated on drawings are clear inside dimensions available for air flow (add liner thickness for sheetmetal sizes). Ductwork shall be sealed to minimized leakage; maximum allowable leakage shall be 2 per cent. All joints shall be mechanically fastened and sealed, all seams shall be sealed, all audible leaks shall be resealed. Sealants shall be water based only. Low pressure ductwork is that portion of the duct system downstream of the terminal unit discharges, and shall be SMACNA Pressure Class 1.5" w.g. Medium pressure ductwork is that portion of the duct system downstream of air handling units and up to the terminal unit inlets, and shall be SMACNA Pressure Class 4" w.g. Medium pressure ductwork construction shall be spiral lock seam (round or oval) or gasketed mechanical fastened (rectangular).

B. Make adjustments in routing, location and, if necessary, in size of ductwork in order to avoid conflicts and achieve the design intent. Differently sized rectangular ductwork may be substituted for design ductwork sizes provided that it is sized for equivalent pressure loss (not just cross sectional area) to sizes indicated.

C. Flexible duct may be used for final connections to air distribution devices. Flexible duct shall be U.L. 181 Class 1 air duct, rated for applicable duct system pressure classification service, with tear resistant, reinforced inner layer, spring steel wire helix, minimum 1-1/2" insulation and outer vapor barrier.

D. Flex duct connections to low pressure trunk duct shall be made with spin-in connections with adjustable, locking manual damper and without extractor scoop (provide conical spin-in connections with manual damper where duct sizes allow). Provide square to round adapters or boots to connect to air device neck where required. Flex duct connections to terminal units, air distribution devices, duct taps, and spin-in fittings shall be secured with nylon/plastic tie straps or metal straps, per SMACNA. Strap or clamp both the inner liner and the outer vapor barrier; seal vapor barrier with foil faced duct tape. Duct connections to medium pressure trunk duct shall be made with conical bellmouth or lateral fittings.

E. All supply air branch take-offs from low pressure trunk ducts shall be made with 45 degree collar and shall have balancing dampers with locking quadrant handle in branch duct. Air extractors or elbows with splitter dampers may be used as alternate branch take-off method.

F. All elbows shall be smooth radius with center line radius equal to 1.5 duct width or mitred with double thickness turning vanes.

G. Install fire dampers in all rated wall, floor, and sub-ceiling penetrations. Dampers shall match the rating of the assembly penetrated. Refer to architectural drawings for locations and ratings of all walls, partitions, and floors. Provide access doors in ductwork at each fire damper location, install on the most accessible side of the duct and well (coordinate with ceiling plans and other components in ceiling). Install smoke dampers in all duct penetrations through smoke rated walls. Where ducts penetrate walls that carry both fire and smoke ratings, the dampers installed shall be combination fire and smoke dampers. All fire dampers shall be U.L. #555 labeled and installed per listing instructions, type "B" or "C" (with blades out of air stream) unless otherwise noted; and shall be "dynamic" rated for all ducted applications, "static" for all plenum (return air) applications. Provide all electrical and low voltage connections for all smoke and fire dampers.

H. Back draft dampers installed within ductwork and provided with louvers shall be counter-balanced type with adjustable counter weights. Back draft dampers provided with air handling equipment (fans, etc.) may be non-counter balanced type, provided the equipment performance is rated for the pressure imparted by the damper with no reduction in scheduled air flows.

I. Grease hood exhaust ductwork shall be 14 ga. black steel with all welded joints and seams, and shall be insulated. All elbows shall be smooth radius with center line radius equal to 1.5 duct width (mitred elbows are not acceptable). Provide code required clearances to combustible and non-combustible materials. Slope at 1" per linear foot and provide NFPA approved traps at all low points, with drain routed to drainage system. Provide access doors for cleaning and inspection at all equipment connections, all changes in direction, and at a maximum of 12 ft. on center.

J. Dishwasher hood exhaust ductwork shall be 18 ga. stainless steel or 16 ga. aluminum with all welded joints and seams, water-tight. Slope at 1/4" per linear foot and provide welded drain connections at all low points, routed to drainage system.

K. Gas vents shall be type "B" double wall flue piping with aluminum inner pipe, 1/2" air space, and galvanized steel outer jacket. Terminate gas vents at 36" minimum above roof with type "B" gas vent cap assembly (tall cone roof flashing, storm collar, and bird-proof cap). Seal all exposed joints and all seams watertight with high temperature rated sealant. Flash roof penetration and seal watertight. Provide code required clearances from all combustible and noncombustible building components.

L. Dryer vents shall be single wall galvanized steel flue piping, with all joints fastened with "pop" rivets and sealed with mastic. The use of screws to fasten dryer vents is strictly prohibited.) Provide standard dryer vent caps for wall mounted exhaust ports. Provide single wall gas vent caps, min. 36" high, for roof mounted exhaust ports.

2.4 THERMAL INSULATION:

A. All mechanical equipment and materials (ductwork, piping, valves, etc.) with cold (below 65 degrees) or warm (above 90 degrees) surfaces shall be insulated. All external insulation shall have a continuous vapor barrier. The use of staples for fastening insulation is prohibited. All insulation products shall be plenum rated with a maximum flame spread/smoke developed rating of 25/50. All maximum thermal conductivity (k) listed below is measured at 75 degrees F mean temperature and expressed in terms of (Btu / hour, sq.ft., degree F per inch thickness of material.

B. Line all new supply and return air ducts as indicated on drawings and/or as described below. Duct liner shall be 1" thick, 3 lb./cu.ft. density fiberglass with a maximum thermal conductivity (k) of 0.24. Provide black, fire retardant, neoprene coating on surface exposed to the air stream and treat with an anti-microbial coating. In general: all return air ductwork shall be lined; and supply air ductwork shall be lined from air handling equipment (FCU, fan, etc.) discharges through the first horizontal elbow or through the first twelve (12) feet, whichever is greater. All new low pressure supply air ductwork serving conference type areas (training, seminar, etc. rooms) shall be lined. Sizes indicated on drawings are clear inside dimensions available for air flow (add liner thicknesses for sheetmetal sizes).

C. All new unlined supply ductwork shall be insulated. All installed lined or insulated ductwork which has been damaged shall have liner or insulation replaced or repaired. Insulation shall be 2" thick, 1 pcf fiberglass duct wrap insulation with a maximum thermal conductivity (k) of 0.27. Provide reinforced foil vapor barrier and foil faced tape seals. Repair all holes in vapor barrier with tape.

D. Exhaust ductwork shall be lined as follows: Exhaust ductwork upstream of exhaust fans shall be lined. Exhaust ductwork downstream of fans which terminates within a ceiling plenum shall be lined. Exhaust ductwork downstream from exhaust fans which terminates at the building exterior or at exhaust riser shafts need not be lined or insulated.

E. All portions of HVAC and Plumbing hot and cold fluid piping systems shall be insulated including valving, fittings, unions and flanges, and all piping system equipment, accessories, and appurtenances. All valving and piping accessories shall be insulated with removable insulation packages, molded to the shape of the component, with all seams taped and sealed to make a continuous vapor barrier. Vapor barrier for piping insulation shall be sealed at all appurtenance penetrations with fabric and mastic or insulating cement.

F. All domestic cold and hot water piping shall be insulated with preformed fiberglass pipe insulation with a maximum thermal conductivity (k) of 0.26. Provide all-service jacket, butt joints and adhesive lap strips, tape all joints and seams. As an alternate, preformed flexible closed cell elastomeric piping insulation systems (AP Armaflex or Aeroflex 2000) with a maximum thermal conductivity (k) of 0.28 may be substituted, providing the thermal performance meets local energy codes. Alternate insulation shall have butt joints with self-sealing adhesive lap strips, seal all joints with solvent adhesive and tape. Fittings shall be fabricated from mitred sections of preformed pipe insulation or Zeston preformed plastic fittings packed with butt type insulation inserts, tape and seal all joints and seams. Insulation thickness shall be 1/2" for cold water and 1" for hot water piping.

G. Insulate all piping below handicap accessible sinks per ADA requirements. Insulate P-traps, trap arm, angle stop valves, and risers with a packaged molded vinyl insulation kit, Handi Lav-Guard model 102W and 105W by Truebro, or approved equivalent. Provide factory preformed piping insulation kits as described or approved equivalent. Other types of insulation systems consisting of non-molded vinyl covered cloth with velcro or zip-up covers, field fabricated pipe insulation systems, and flexible strip wrapping type insulation are not acceptable.

H. All sanitary/waste drainage piping receiving cold waste water (condensate drainage, icemaker waste, water cooler/drinking fountain waste, etc.) shall be insulated with 1-1/2" thick, 1 pcf fiberglass blanket wrap insulation with reinforced foil vapor barrier and foil faced tape seals. Preformed piping insulation systems as described for domestic hot and cold water piping may be substituted. Insulate all portions of drain system piping receiving undiluted cold waste water to connection with main drain lines including: drain body, tailpiece connections, traps, and trap arms. Insulate all horizontal storm water piping similarly. Insulate and heat trace all traps exposed in unconditioned areas.

I. All waste drainage piping which receives cold waste water (icemaker waste, etc.) from equipment connection to sanitary drainage system shall be insulated with 1/2" thick preformed, foamed plastic tubing, plenum rated pipe insulation, Armaflex type FR or approved equivalent.

J. All condensate drainage piping above ceiling shall be insulated with 1/2" thick preformed, foamed plastic tubing, plenum rated pipe insulation, Armaflex type FR or approval equivalent, with a maximum thermal conductivity (k) of 0.26. Condensate drainage piping on roof need not be insulated.

K. Grease Hood Ducting Insulation. Insulate ducting with a blanket insulation designed to be applied directly to grease ducts and permit zero clearance to adjacent combustible surfaces. Provide one or two layers of 1-1/2" or 2" thick wrapping to constitute a UL listed and ASTM tested 1 hr. or 2hr. fire rated system (2hr. unless specifically noted otherwise). The layers are to be applied in accordance with the manufacturer's recommendations, with all overlapping bands to be stainless steel. Acceptable products: Vesuvius USA Corp. ("Pyrosorb FP or CSM" Duct Wrap), Thermal Ceramics, Inc. ("Firemaster" Duct Wrap), or ETS Schafer ("Flameshield or FSB" Duct Insulation) or equivalent approved by the AHJ as measured by Nelson Firestop ("FSB Flameshield Blanket"), Certainteed ("FlameCheck"), or Armstrong.

2.5 HVAC PIPING:

A. All condensate drainage (D) piping above ceiling shall be type "M" hard drawn copper with wrought fittings and brazed joints. Condensate drainage piping above roof and not within return air plenums may be PVC with solvent weld joints.

B. All piping is to be labeled with plastic labels, permanently strapped to piping, outside of applicable insulation and covers/enclosures. Where existing piping systems are labeled, labeling shall match existing base building standards. Where no current standards exist, labels shall be color coded, unique for each piping system, with flow direction arrows, and identification lettering. Piping shall be identified with block letters, sized to be easily readable from floor level. Locate and mount labels so as to be readable from floor level or area of easiest access. Provide labels at each piping branch connection, at each equipment connection, on each side of wall and floor penetrations, and at 20 linear feet on center maximum. Piping systems shall be identified as follows: domestic cold water = CW(DCW), domestic hot water HW(DHW), and domestic hot water recirculation/return = HWR(DHWR), sanitary/waste drainage = S, pumped waste discharge = (PWD), vent = V, storm drainage = ST, gas = G, condensate drainage = D.

H. All gas (G) piping above grade and accessible (exposed within occupied spaces, below floor within accessible crawl spaces, within accessible attic spaces, and above accessible ceilings not used as return air plenums) shall be Schedule 40 black steel pipe of sizes indicated, ASTM A-53 class. For pipe sizes 2" and smaller, class 150 malleable iron fittings and threaded joints. For pipe sizes 2-1/2" and larger, standard weight wrought steel fittings butt-welded joints. Provide the following minimum piping accessories at all equipment connections (in order of proximity to unit): flex. connection, union, dirt leg, and shut off valve (gas cock). All exterior gas piping installed exposed to weather or under covered, unconditioned areas shall be painted with a rust resistant primer and a weather proof final coat.

I. All gas (G) piping in accessible return air plenums, in non-accessible hollow enclosures, and below grade shall be Schedule 40 black steel pipe of sizes indicated, ASTM A-120 class, with standard weight wrought steel fittings, socket welded joints for pipe sizes 2" and smaller and butt-welded joints for pipe sizes 2-1/2" and larger. Underground piping shall be tar coated and wrapped.

J. No gas (G) piping shall be routed in non-accessible return air plenums, in non-accessible solid enclosures, and below floor slabs where other practical routing options are available. Where no other routing is practical (as determined by the local authority having jurisdiction) all gas piping through these enclosed spaces shall be Schedule 40 black steel pipe of sizes indicated, ASTM A-120 class, with standard weight wrought steel fittings, socket welded joints for pipe sizes 2" and smaller and butt-welded joints for pipe sizes 2-1/2" and larger. Further, the piping shall be encased in an airtight cast iron pipe enclosure which shall extend 2" beyond each end of the enclosed space, with both ends of the enclosure tightly sealed and vented to atmosphere.

K. Provide gas pressure regulator at connection to each piece of gas burning equipment (RTUs, MAU's, etc.). See details for regulator locations in gas piping connection assembly. Regulators shall regulate gas pressure to equipment from 2 psi (max.) down to 11" wg (min.) and shall be sized to flow the maximum CFH requirements for each individual piece of equipment. Provide venting per manufacturer's rating. Refer to HVAC schedules for equipment gas input loads. Regulators shall be as manufactured by American Regulator, Maxitrol, or approved equivalent.

2.7 FIRE PROTECTION (Existing System Retrofit):

A. Rework existing fire protection system to cover all areas per NFPA 13. Relocate existing sprinklers and add new sprinklers as required to cover all areas per new Architectural floor plans and reflected ceiling plans. Existing piping may be reused where practical. Add new piping as needed for new sprinkler layout. Sprinkler system modification shall comply with NFPA 13 and local requirements.

B. Reuse existing base building sprinklers in acoustical tile ceilings as much as practical. Unless noted otherwise, provide new concealed flush mounted type sprinklers in all hard ceiling areas and all equipment rooms (LAN/Server Rooms, IT closets, etc. Locate all sprinklers within lay-in ceiling areas in the center of ceiling tiles, +/- 2". Provide layout, size, proposed sprinkler locations and submit to architect for approval. Replace all damaged sprinklers and escutcheons. Where existing sprinklers must be replaced because of condition or new sprinklers must be added to accommodate architectural requirements, they shall match base building sprinklers. All new sprinklers shall have same temperature and response ratings as base building sprinklers. Submit manufacturer's data on new sprinklers, color selections, and proposed sprinkler layout to architect and engineer for approval prior to start of work. Sprinkler head types in each room must all match (color, style, etc.) according to ceiling type.

C. The adapted piping system shall be coordinated with all other new and existing trades (mechanical, electrical, tele./data, etc.) and building components (architectural and structural) to avoid conflicts with other elements (ceiling lighting plan, ductwork, other mechanical piping, mechanical units, cable trays and wireways, etc.). Where typical piping routing elevations are interrupted by non-typical conditions, provide offsets with drain valves as required at low points, and route above, below, or around conflicts. As FP piping is not shown on design drawings, it is the responsibility of the Contractor to provide offsets in FP piping as required for routing of all other trades, particularly ductwork, and coordinate with those trades for their requirements.

D. All new wet sprinkler piping shall be as per NFPA 13 and shall match existing materials, fittings, and couplings types, except that the use of plastic piping is strictly prohibited.

E. Provide for coordination purposes only (NOT for engineer review), sprinkler system layout and coordination drawings showing new sprinkler layout, existing piping, new piping, and all other new/existing components requiring coordination (structure, ceiling lighting plan, ductwork, other mechanical piping, mechanical units, cable trays and wireways, etc.) per paragraph C. above. Submit drawings and calculations to the local authority having jurisdiction as required for permitting.

PART 3.0 EXECUTION

3.1 DESCRIPTION:

A. Install all equipment and materials in accordance with applicable codes, NFPA, NEC, applicable industry standards (SMACNA, ASME, ARI, AMCA, AGA, CISPI, etc.), manufacturer's recommendations, equipment UL listing requirements, and these documents. Should conflicts arise, the more stringent requirement shall govern.

B. Any damage cutting or removal of existing structure or finishes resulting from the installation of any equipment specified under this division shall be repaired to match surrounding areas. Coordinate all cutting and patching with other trades.

C. Clean all equipment and touch up or replace any damages, mars or scratches before beneficial occupancy.

D. Where existing equipment is to be re-used, contractor shall check the equipment for proper operation upon initial job site mobilization and prior to beginning related work. Any non-functioning equipment must be reported to the Owner/Landlord and Design Team. Any existing base building equipment will be replaced or repaired by the Owner/Landlord at the Owner/Landlord's expense. Any existing supplemental equipment will be repaired by the contractor under this scope at the expense of the Tenant. Any equipment not reported will be assumed to be in working order and must be fully functional when re-installed, otherwise contractor will be responsible for repairing or replacing said items with no additional cost to the Owner/Landlord or Tenant.

E. All exterior uninsulated steel piping installed exposed to weather or under covered, unconditioned areas shall be painted with a rust resistant primer and a weather proof final coat. All exposed insulated piping shall have a weather proof jacket for non-water proof insulation systems or the insulation shall be painted with UV resistant, water based paint for non-water proof systems. All piping below floor shall have a minimum cover of 12"; all piping below grade shall have a minimum cover of 36" or as required for invert elevation of Civil utility connections. Piping below floor/grade shall be laid on compacted loose fill (sand or fine gravel), bottom of trench excavated to loose fill to above top of pipe, and covered to floor/grade with compacted fill of earth removed during trenching. Repair flooring to match existing.

F. Pressure test medium pressure duct systems for leaks prior to installation of insulation at the pressure rating of the duct system construction or 1.25 times the maximum operating pressure, which ever is greater. Maximum duct system leakage rate shall be 2 percent.

G. Pressure test all piping systems for leaks prior to installation of insulation and after cleaning, flush, and fill, at 1.5 times the maximum system operating pressure or at the piping system construction pressure rating, which ever is less. Test for 24 hours with no loss of pressure.

H. Provide for each new piece of mechanical equipment a permanent label (metal, bakelite, plastic, or equivalent) with the equipment name/tag/mark permanently embossed into the label. Mount label on unit, permanently affixed to unit, located adjacent to nameplate or adjacent to access door if nameplate is mounted within unit. Label shall indicate equipment tag, tenant name, and floor.

I. Provide for each new and existing device controlling mechanical equipment (thermostat, sensor, switch, rheostat, timer, etc.) a permanent label (metal, bakelite, plastic, or equivalent) with the controlled equipment name/tag/mark permanently embossed into the label. Mount label permanently affixed to device cover (or on inside of hinged covers) and located so as not to block device operation or instructions.

J. Provide smoke detectors in the supply and return air openings of all air handling equipment with air delivery capacities of 2000 CFM or above to shut down the unit upon detection of smoke and notify the fire alarm system. Where buildings are equipped with existing or new fire alarm systems smoke detectors shall be compatible with the fire alarm system and shall match existing system or building standard types; where systems are addressable, provide addressable type detectors; coordinate with fire alarm contractor. All duct smoke detectors shall be factory mounted and wired. Unless otherwise noted, duct mounted smoke detectors shall be installed by Div. 15 and wired by Div. 16.

K. Provide Operation & Maintenance Manual for all new equipment. Provide two 8 hr. training sessions (scheduled per the owner's direction) for owner's representatives on maintenance and operation for all new equipment.

3.2 TEST AND BALANCE:

A. Test and balance shall be performed by a NEBB or AABC licensed agency only. Provide a minimum of 5 original bound copies of a complete, typewritten test and balance reports for review upon project completion. Test and balance all equipment and air distribution devices to capacities indicated. Adjust drives as required. Report condition and operation of all controls and controlled devices.

B. Balance report shall indicate air and water flows and percent of design flow for all devices and equipment. Flows for equipment serving multiple devices shall be totaled for each piece of equipment. Provide small scale drawing(s) with report indicating device numbers and equipment tags. Equipment shall be referenced per the tags as noted on the design drawings; where equipment is not so noted on the design, note tags used for balancing report on small scale drawing provided. Balancing report shall note the nominal size/capacity of all equipment (inlet diam. and fan size for VAV's & PIU's, nominal tons for HPU's, FCU's, RTU's, etc.) as well as the manufacturer and model numbers.

C. Test all equipment controls for proper response to all applicable operation sequences: cooling, heating, economizer, and ventilation/exhaust cycles; normal, after hours, night setback, morning warm-up/cool down, and emergency modes.

D. Balance all system components to within -5% or +10% of design quantities indicated. Measure and record entering, leaving, operating characteristics at all equipment for comparison with design capacities scheduled. Measurements/recordings may include, but are not limited to, the following: entering and leaving temperatures, pressures, velocities, and flow rates for all fluids (air, water, refrigerant, etc.); all electrical operating characteristics (voltage, amps, watts); unit model numbers, component sizes, and operating speeds (both motor and driven equipment rpm's).

E. Where initial measurements indicate equipment to be operating at conditions significantly different from scheduled capacities (greater than -5% or +10%), measure all entering, leaving, and operating conditions for diagnostic purposes; note any discrepancies between design assumptions and installed conditions; and report same to the architect/engineer in writing as soon as possible.

F. Recalibrate controls in areas associated with this work to insure proper operation. Adjust cooling systems to 74 degrees F and heating setpoints to 72 degrees F.

G. Balance all new and existing air handling equipment (terminal air units, fans, heat pump units, rooftop units, fan coil units, etc.) serving tenant space under this contract. Balance to the total of the air quantities of the air distribution devices served; or, where air quantities are not indicated, to the total air quantities for the unit/zone as indicated on the base building design drawings (copies on file with Landlord). Reports shall include both design and measured/balanced air flows and percent of design flow for each air device as well as subtotals for each zone served and totals for each piece of air handling equipment.

H. Balance all air distribution devices (diffusers, registers and grilles) to the air quantities indicated on the drawings. Balance all new and existing ceiling diffusers and rebalance all existing perimeter slot diffusers. Balance outside air to quantities indicated.

3.3 EQUIPMENT & MATERIALS INSTALLATION:

A. Mechanical equipment shall be as indicated in the equipment schedule or approved equivalent, and installed per the manufacturer's recommendations. Coordinate with Division 16, Electrical, before bidding and ordering equipment requiring electrical connections; coordinate quantity, size, and type of connection(s) and overcurrent protection; and disconnect(s), and starter(s) requirements. Do not mount disconnect switches over unit nameplates. All electrical work shall be done in conformance with these specifications, Division 16 specifications, the National Electric Code, and local codes. Where conflicting requirements may occur, the more stringent shall govern.

B. Support all ductwork, piping and equipment from structure. Do not support from other ductwork, piping, conduit, etc. Support all ductwork with hangers and supports per SMACNA. Support all piping with hangers, supports, anchors and guides per ANSI Code for pressure piping, ANSI B31.1 with addenda 31.1 OA-69. Sizing and spacing of hangers shall be per these standards, unless otherwise noted. "C" clamps shall not be used unless tack welded or strapped to structural steel members.

C. Insulation shall be continuous at all wall and floor penetrations (except at fire dampers) and at hanger supports. Hanger supports for insulated piping shall be outside insulation; provide insulated inserts and sleeves at hangers. Insulation vapor barrier shall be sealed at all joints and seams, and at penetrations by appurtenances (damper rods, valve stems, etc.). Repair insulation at existing ductwork which has been reworked. Tears and punctures of vapor barrier shall be repaired and sealed. All piping and ductwork pressure testing shall be performed before insulation is applied.

D. Provide sleeves, clamps for piping at all wall and floor penetrations, and fire proofing at all rated wall and floor penetrations. Provide escutcheon plates at all visible wall and ceiling penetrations.

E. Locate equipment away from walls to structure and rated walls as necessary to provide required clearances for proper operation, maintenance and inspection.

F. Install all new ductwork as high as possible, tight to structure above. Transition ductwork flat on top to maintain maximum bottom of duct elevation. Install all piping above ceiling as high as possible, with sloped piping as high as slope will allow. Raise any ductwork and piping as required to avoid conflict with new ceiling features and new light fixtures, field verify height of existing structure and any other existing work by other trades.

G. Flexible duct runouts to diffusers shall be sized to match the device neck, unless otherwise noted. Maximum low pressure flex. duct length is 8 ft., provide round gal. steel duct runouts to maintain maximum 8 ft. flex. length. Do not install flex duct through walls to structure, install only hard round steel ductwork through non-rated walls to structure (provide FD's at rated wall penetrations). Flexible duct runouts to diffusers shall be adequately supported and installed free of kinks and sags. Flex duct connections to low pressure trunk duct shall be made with spin-in connections, new spin-in connections shall not be made within 5 ft. of any terminal unit outlet or within 2.5 ft. on centers. Provide square to round adapters or boots to connect to air device neck where required.

H. Flexible duct runouts to terminal unit inlets shall be sized to match the box inlet, unless otherwise noted. Connections to terminal units shall be a minimum of 3 duct diameters and a maximum of 4 ft. of straight flex duct. Flex duct connections to terminal devices shall be used for vibration isolation and alignment of slight offsets only. Flex duct connections shall not be used for offsets of more than half of the duct diameter, for elbows, nor for runouts longer than 4 ft. Provide round steel duct runouts with elbows, offsets, and fittings as required to maintain these flex duct conditions at unit inlets. Flex duct connections to medium pressure trunk duct shall be made with conical bellmouth fittings.

I. Locate diffusers and return air grilles at positions indicated on drawings and as required to avoid conflict with new light fixture and sprinkler locations. Adjust length of duct connection to diffusers to the minimum length required to provide smooth, long radius bend connections, free of kinks and sags, and without unnecessary length or bends. Reduce length of connection as required by removing excess flex duct and reconnecting. Extend connections as required by adding necessary length of insulated, hard round steel duct at trunk duct tap and reconnecting existing flex duct to end.

J. Mount new thermostats/sensors at locations indicated on drawings. T'stat mounting heights shall be per ADA requirements unless noted otherwise on drawings for different wall mounting heights or ceiling mounting. Mount T'stats at 54" AFF for full (side) wheelchair access locations and at 48" AFF for front facing access only. Locate ceiling mounted thermostats out of throw of nearby light switches. Locate wall mounted thermostats on RAG's adjacent to the bottom of the grille (within the room served) unless otherwise noted. Locate thermostats above light switches where shown in the immediate vicinity of switches. Do not locate thermostats in the same wall stud space as dimmers and rheostats. Verify exact location of thermostats with architect (refer to Architectural floor plans and furniture plans and Electrical lighting plans for coordination).

K. Remove any inactive existing ductwork and piping within the scope of this work which is not reused. Work not shown as new or existing on these documents shall be removed. Connection points from ductwork removed to existing ductwork to remain shall be capped with a sheetmetal patch, sealed air tight with duct sealant, and re-insulated to match existing liner or insulation on existing ductwork to remain. Connection points from piping removed to existing piping to remain shall be capped and sealed water/gas tight, and re-insulated to match existing insulation on existing piping to remain.

L. Locate perimeter slot diffusers, where required, to avoid new tenant partitions. No slot diffuser shall be allowed to straddle a partition. Slot diffusers have been indicated on the plans at desired design locations. However, actual field locations may require relocations to avoid new partitions. The Contractor shall verify all locations and relocate as required.

M. All 2X2 lay-in diffusers shall have 4-way adjustable throw, unless noted otherwise. Adjust all diffusers in corridors or within 3 feet of a wall to provide 2-way or 3-way blow away from or parallel to walls.

N. Portions of ductwork and piping/conduits visible through air distribution devices in finished areas shall be painted flat black.

O. Provide access panels in non-accessible ceilings and in walls to structure to allow adequate room for maintenance of equipment and balancing of system. These panels shall minimum be 24" x 24" unless otherwise noted.

P. Condensate drain lines shall be sized to match unit connection size (3/4" minimum) and as shown on plans, shall be trapped at the unit with a minimum 2" deep water seal, and shall be routed with a minimum slope of 1/8" per foot. Drain lines shall be terminated turned down above hub drains or floor drains on building interior; at roof drains, splash blocks or dry wells/French drains on building exterior; interior drains may be routed down in walls and below counters and terminated at the tailpiece of any sink or lavatory, should such connection be available (coordinate with Plumbing). At the Contractor's option, or where minimum slope cannot be maintained from the coil to the termination point, condensate drain pumps may be provided. Discharge from pump immediately to a high point and slope down to drain termination point. The Contractor shall be responsible for coordinating all requirements for drain pump installation (electrical connections, drain termination, code compliance for ceiling plenum installations, etc.)

Q. Equipment mounted on structural steel supports frame members (channels or angles) with all-thread hanger rods, sized per equipment weight requirements. VAV's, PIU's, and small fans (under 100 lbs.) may be supported with 1" wide duct hanger strap.) All equipment suspended from concrete structure shall be supported by shallow insert concrete anchors, rated for 200 percent of point loads; coordinate with structural reinforcing or post tensioning cables. All equipment suspended from steel or wood structure above shall be suspended from structural steel supports frames (channels or angles) positively bolted to a minimum of three roof/floor frame members above. Support framing system shall be sized to support 200 percent of the total distributed equipment weight, frame members and all-thread rods shall be sized to support 200 percent of their respective point load weights. Bolt equipment to supports at each equipment support point (min. two points each on a min. of two frame members). Provide combination spring/neoprene vibration isolators for equipment with moving parts (fans, compressors, etc.). Equipment supports (angles, channels, etc.) shall extend sufficiently past footprint of equipment to allow for installation of vibration isolators between supports and equipment base. Equipment support hangers shall be located to allow for unrestricted opening of equipment access doors/panels to allow for proper equipment maintenance. Locate equipment to provide adequate room from structure, walls above ceiling, and ceiling features to allow for maintenance of equipment and balancing of system. Provide auxiliary drain pan beneath entire unit for water storing equipment (water heaters) and equipment with cooling coils.

R. Flash all roof and exterior wall penetrations and seal water-tight. Provide wall sleeves for all wall penetrations. Provide roof curb by equipment manufacturer for all roof mounted equipment. Roof curbs shall be insulated, specifically sized to match the size and weight of the equipment supported, and designed to conform the NRCA Standards. All piping and wiring connections to roof mounted equipment shall connect through the bottom of the unit within the units' roof curb where units are offered with standard bottom connection options. Where equipment is offered with only side external connections, route connections up below unit, through the side of the roof curb (min. 8" above the roof) and seal curb penetration water tight. Where roof mounted equipment has no curb, provide a separate 12" high roof curb "pitch pocket" with curb cap and min. 4" overhang with drip edge on all sides for

MECHANICAL SPECIFICATIONS

HVAC CONTROLS

Provide a new full Direct Digital Controls (DDC) System to monitor and control all HVAC equipment (RTU, PIU's, VAV, & Fans) and interface with lighting controls and fire alarm system. Provide graphical user interface via a new, independent personal computer. Reference specification Section 15950 – Automatic Temperature Controls for details and full requirements.

RTU operation shall be controlled by its integral controls and interface with the DDC system for occupied / unoccupied operation, cooling, heating, morning warm up, outside air economizer operation, and demand control ventilation.

VAV's/PIU's: shall be controlled by the DDC system via wall mounted (or ceiling mounted where indicated) thermostats for all units. T'stats shall have occupant adjustable controls; the amount of control shall be remotely definable by the controls system operator from +/– 5F, +/– 2F, or none. Interlock all T'stats with the controls system timeclock and night setback functions to Enable/Disable T'stats.

CO2 sensors shall be compatible with RTU controller and shall have adjustable setpoints, set at 800 ppm (adj.). CO2 sensors are to be mounted at 5 FT AFF in each "high occupancy" space (conf. rooms and break room) and in the two RTU RA openings. Coordinate exact locations with Architect. CO2 sensors shall modulate the RTU OA intake damper to maintain maximum setpoint of the worst case detector reading.

EF's and TEF's: See schedule for control requirements.

SECTION 15950 – AUTOMATC TEMPERATURE CONTROLS

PART 1 – GENERAL

1.1 DESCRIPTION:

A. This Contract is for all materials, labor, supervision, services, tools, equipment, equipment transportation, and other items required for the construction of the automatic temperature controls. Coordinate closely with the Mechanical and Electrical Drawings. The Contractor shall closely coordinate the work by placing the highest priority on proper submittal data preparation and field interfacing to ensure a properly constructed and sequenced project schedule.

B. The systems shall be complete in all respects, tested and ready for operation. Start up and commissioning of the DDC system shall be included in the contract. The system shall be a web–based "open protocol" type comprised of stand–alone direct digital control (DDC) panels at each air handling unit; terminal units with factory installed stand–alone DDC controls; rooftop units with factory installed controls. If the controls vendor is unable to provide factory–installed controls on the equipment, then controls vendor shall provide all necessary interfaces and communication modules to provide access to all equipment point information at the main DDC controller. All controls shall be networked together to form a complete communicating system. Systems which rely on a central communications panel to allow data sharing and communications, shall not be acceptable. A web–based autodial/auto answer modem shall be provided for remote communications and support. Controls vendor shall coordinate with the Ethernet communications media and shall include the cost of all interfaces or transceivers within their price.

C. Manufacturers' standard components shall be used for the system. All components shall be of proven design and available at least two years prior to bid date.

D. Programming of the start/stop time of day sequences shall be coordinated with the building personnel for the normal hours of operation for the mechanical equipment as specified for their operation.

E. The controls system shall be fully accessible via password secured high speed internet interface.

F. The system shall be fully capable of operator monitoring and control of all sensors, set points, equipment and dampers completely through a dynamic graphical interface, in addition to via written programming from remote locations via internet access. The intention is to allow the building engineer to quickly navigate though the buildings mechanical system from a large–scale overview (building elevation) to the floor plan and down to the equipment level. All relevant equipment and component shall be represented so as to illustrate the system component interactions.

G. The control system shall be designed such that each mechanical system will be able to operate under stand–alone control. As such, in the event of a network communication failure, or the loss of any other controller, the control system shall continue to independently operate under control.

1.2 QUALITY ASSURANCE:

A. Manufacturer's Qualifications: Firms regularly engaged in manufacture of electric/electronic direct digital control equipment, of types and sizes required, and whose products have been in satisfactory use in similar service for not less than five (5) years. Submittals of documentation supporting this qualification may be required.

B. Installer's Qualifications: Firms specializing and experienced in these types of control systems installations for not less than five (5) years. Submittals of documentation supporting this qualification may be required.

C. Codes and Standards:

1. Electrical Standards: Provide electrical components of control systems which have been UL–listed and labeled, and comply with NEMA standards. Electrical installation shall comply with the National Electrical Code, 1999 Edition.
2. NEMA Compliance: Comply with NEMA standards pertaining to components and devices for control systems.
3. NFPA Compliance: Comply with 1999 edition NFPA 90A "Standard for the Installation of Air Conditioning and Ventilating Systems" where applicable to controls and control sequences. Comply with 1999 edition NFPA 101 "Code for Safety to Life from Fire in Buildings and Structures".

1.3 WARRANTY:

A. The control system shall have a one (1) year warranty for parts and labor from date of Owner acceptance upon system commissioning completion.

1.4 SCOPE:

A. The automatic temperature controls shall be provided by the Contractor with all components such as electronic devices, junction boxes, direct digital control panels, temperature and pressure sensors, control dampers, control valves, etc. (those not provided with the their equipment) mounted, wired and tested.

B. Provide (furnish and install) all devices such as power supplies required for control equipment and components; control transformers, transformer relays, start–stop push buttons, relays, air flow and pressure switches. Temperature sensors, thermostats, flow switches, etc. shipped loose with their equipment, shall be installed by the Contractor.

C. Fan Shutdown: Furnish and install firestats and the wiring interlocks with the motor starters of the air units' and fans for "hard–wired" local shutdown. Additionally, provide hard wired interlocks for air units shutdown to duct smoke detectors.

D. Provide power supply wiring and conduit from 120 volt toggle switches and junction boxes to power connection on unit control devices such as dampers and valves, DDC and unit panels, control transformers, etc., including terminations.

E. Provide wiring with conduit (or plenum rated cable) for any remote start/stop switches and manual or automatic motor control devices.

F. Provide interlock and control wiring with conduit between electrically–operated equipment units and devices such as starters, etc., and between equipment and field–installed control devices.

G. Provide control panels required including wiring and conduit from the control components to these panels with terminations completed.

H. Field label all control wiring circuits (control and power), sensors, and thermostats.

I. Provide the engineering, calibration, and checkout necessary for a complete and fully operational control system including all programming for equipment operation, trending, histórical data collection, preventative maintenance schedules, etc.

J. Coordinate location of components and devices requiring connection to the control system with the mechanical and electrical contractors prior to submission of shop drawing submittals and reconfirm in scheduled field coordination meetings at the jobsite with the trades involved for verification of quantities and sizes of devices to be installed for a complete and functional system.

K. Submit product data, control diagrams, component set points, sequences of operation, control valves and dampers schedules, Operating and Maintenance Manuals, Record Drawings indicating "as–built" conditions, and system start–up commissioning reports, refer also to Sections 15010 and 15011.

L. Provide services required during the guarantee period such as servicing and adjusting controls for safe, stable operation with change of seasons; making changes in control devices not providing the specified equipment operation including the removal, replacement, and installation of new devices as necessary to provide safe, stable operation of the equipment while maintaining the sequence of operation specified. Programming and commissioning time for fine tuning the sequences of equipment operation after Owner acceptance during the guarantee period shall be included to commission the efficient operation of the systems.

M. Provide pre–operational testing.

N. Verify equipment components, and interconnecting wiring installation are checked for proper connection and termination prior to mechanical system start–up. Submit written verification to the Engineer that these items are installed in accordance with the Contract Documents and are ready for calibration and start–up.

O. Provide interlock and plenum rated control wiring for above ceiling installations between electrically–operated equipment units and devices such as smoke detectors, firestats, starters, fire alarm system, etc.; and between equipment and field–installed control devices. Smoke detectors shall be hard wired to the equipment starters for direct shut down upon activation of detectors. Provide all plenum rated control wiring from temperature sensors, thermostats, etc. to the devices they control or interface with. Interconnecting plenum rated wiring and conduit (conduit for exposed control wiring in mechanical room only) between all required devices shall be provided. Refer to Division 16 electrical specifications for wiring requirements.

P. Provide control panels required including wiring and conduit (conduit for exposed control wiring in mechanical room only) from the control components to these panels with terminations completed. Control panels shall have numbered terminal strips with no smaller than #20 AWG 600 volt insulated copper conductors. Control wiring shall be no smaller than #20 AWG 600 volt insulated copper conductors and DDC wiring shall be no smaller than #20 AWG copper insulated conductors.

Q. Provide control wiring with conduit from the control devices to the local control panels (local programmable control modules located at each air handling unit, other types of required control interface modules, etc.), new outside air temperature and humidity sensors shall be interfaced with for this work, from indicating devices and unit controllers.

R. Field label all control wiring circuits (control and power), sensors, thermostats, duct smoke detectors, and firestats.

S. Coordinate location of components and devices with the mechanical and electrical contractors.

1.5 WORK BY OTHERS:

A. The Contractor shall:

1. Furnish and install all necessary connections and taps required for flow, pressure or temperature sensing devices, meters, etc.
2. Install motorized control dampers not provided with equipment with linkages, motor operators and hardware, and scheduled and also as indicated in Ductwork and Ductwork Accessories Specifications Sections.
3. Coordinate location of devices for installation by the controls contractor. Coordinate the installation by the controls contractor of unit panels and required accessories such as sensors, thermostats, power supplies, motors, relays, etc. that are shipped loose with mechanical equipment.
4. Assemble multiple section dampers with required interconnecting linkages, shafts and brackets and extend the required number of shafts through the ducts for externally–mounted damper motors. Jack shafts shall be assembled with sealed roller or ball bearings of stainless steel construction.
5. Install duct mounted smoke detectors, furnished by Division 16.
6. Verify all equipment for mechanical systems and components installed by the controls Contractor are checked for proper connection and termination prior to mechanical system start–up. Submit written verification to the Architect/Engineer that these items are installed in accordance with the Contract Documents and are ready for calibration and start–up.
7. The Contractor shall install and connect all end devices as follows:
   a. Power supply wiring and conduit from electrical panel power source to power connection toggle switch on controls units and junction boxes near control equipment. Include disconnects, starters, combination starter/disconnects and required electrical devices, except where specified as furnished or factory installed by the equipment manufacturer to electric motors and devices. Coordinate all devices for installation with the mechanical and controls Contractor.
   b. Power supply wiring of 120 VAC power in conduit to all DDC temperature/control panels.
8. Duct smoke detectors shall be furnished by Division 16 installed by the Contractor and wired to the fire alarm system by Division 16 and to fan starters by the contractor.

1.6 ACCEPTABLE MANUFACTURERS:

A. Available Manufacturers: Subject to compliance with requirements, manufacturers offering automatic temperature controls which may be incorporated in the work include, the following:
1. Basis of design = Siemens Apogee
2. Acceptable alternate = Johnson Controls Metasys

PART 2 – PRODUCTS

2.1 SUBMITTALS:

A. Submittals shall include all equipment catalog cut sheets, components, wiring diagrams, controllers and panels, and system engineering and programming required for the installation and operation of the control system. Refer to Section 15011 for additional requirements.

2.2 MATERIALS AND EQUIPMENT:

A. GENERAL

1. The automatic temperature control products shall be provided in sizes and capacities required to perform the sequence of operations specified herein, consisting of the DDC panels for start/stop of mechanical equipment, thermostats, sensors, controllers (electric and electronic), and other components as required for a complete installation. Except as otherwise indicated, provide manufacturer's standard control system components as indicated by published product information, designed and constructed as recommended by manufacturer.

B. Temperature Sensors: Temperature sensors shall be of the thermistor or RTD type with a high resistance change versus temperature change to ensure good resolution and accuracy. Temperature sensors should have an accuracy of +/– 1.0 deg F. Sensors shall be for room, duct or well mounting as appropriate. Sensors shall be available in various ranges to properly suit the application.

C. Status indication: Status indication for air units and fans shall be provided by a current sensing sensor. The sensor shall be installed at the motor starter or motor to provide load indication. The unit shall consist of a current transformer, a solid state current sensing circuit (with adjustable set point) and a solid state switch. The switch shall provide a N.O. contact for wiring back to the DDC Panel

D. High Temperature Detection Thermostats and Smoke Detectors:

1. High Temperature Detection Thermostats shall be provided to stop each air handling system circulating less that 2000 CFM air volume and shall be of the manual reset type with sensing element arranged to insert into duct or casing and shall be set for 125F. The device shall have a double pole, double throw contact for supply fan shutdown and remote alarming.
2. Control contractor shall provide hard wiring interlocks from the motor starters to the smoke detectors to shutdown fan on smoke detection and send a signal to the fire alarm system.
3. Duct mounted smoke detectors shall be provided by Division 16 and installed by the mechanical contractor. All necessary interlocks, relays, etc., with smoke detection system and mechanical equipment, shall be provided by the controls Contractor.

E. Low Temperature Detection Thermostat: Low Temperature Detection Thermostat shall be provided to stop each air handling system with outside intake air and shall be of the manual reset type unless otherwise specified with sensing element not less than 20 feet long. Any one foot of sensing element, when subjected to temperatures below setpoint of controller, shall actuate thermostat switch mechanism regardless of temperature being sensed by the remainder of the element. The device shall have double pole, double throw contacts for fan shut down and remote alarming at the network printer.

F. Controlled Devices

1. Automatic Control Dampers:
   a. Damper frames are to be constructed of formed 13–gauge galvanized sheet steel, mechanically joined with linkage concealed in the side channel to eliminate noise and friction. Compressible spring stainless steel side seals and self–lubricating bearings shall also be provided.
   b. Damper blade width shall not exceed 8 inches and shall be provided with seals. Blade rotation is to be parallel or opposed as shown on the schedules. Damper performance shall be tested in accordance with AMCA Standard 500 and specified as follows:
      1) Dampers with seals for Class I leakage resistance in applications requiring very tight closure and high velocities. · Dampers with seals for Class II leakage resistance in applications requiring tight closure and less velocity such as outdoor air. Dampers with seals for Class III leakage resistance in applications where tight closure is not required such as return air applications. Damper sealing force at 4 inches differential shall not exceed 6 inch·pounds per square foot. The damper must be rated to operate over a temperature range of –40F to 200F (–40C to 93C) standard. Damper sizing shall be by the designer in accordance with accepted industry practices to ensure proper system performance. Blank off plates and duct–to–damper transitions may be required.
   c. Each frame is made of galvanized sheet steel, formed into channels, and mechanically joined for maximum strength. The modular design of the frames means that they can be quickly and easily coupled in the field.
   d. Damper actuators shall be sized to operate their appropriate dampers or valves with sufficient reserve power to provide smooth proportional action or two–position action as specified. Where two or more actuators are to be operated in sequence with each other, provide positive sequencing relays for accuracy and non–overlapping operation. Provide positive positioning relays as required to meet system design functions.

G. Wall mounted thermostats and temperature sensors for application specific controllers connected to the air terminal units shall be sensors only manual two (2) hour override button, with no local setpoint adjustment and no display.

2.3 NETWORKING COMMUNICATIONS

A. The design of the control system shall be web based with network operator stand_alone DDC Controllers. The network architecture shall consist of two levels, a high performance peer_to_peer network and DDC Controller specific local area networks with access being totally transparent to the user when accessing data or developing control programs.

B. Peer_to_Peer Network Level: All operator devices either network resident or connected via dial_up modems shall have the ability to access all point status and application report data or execute control functions for any and all other devices via the peer_to_peer network. No hardware or software limits shall be imposed on the number of devices with global access to the network data at any time.

2.4 DDC Controller Local Area Network (LAN):

A. This level communication shall support a family of application specific controllers and shall communicate with the peer_to_peer network through DDC Controllers for transmission of global data.

2.5 MAIN DDC CONTROLLER:

A. The Main DDC Controller shall be stand–alone, multi_tasking, multi_user, real_time digital control processors consisting of modular hardware with plug_in enclosed processors, communication controllers, power supplies and input/output point modules. Controller size shall be sufficient to fully meet the requirements of this specification. Each controller shall support a minimum of two (2) LAN Device Networks. The Main DDC Controller shall interface with the DDC controllers factory or field installed at all mechanical equipment. Provide any necessary "Gateway" control panels to interface with the DDC communication being transmitted by the mechanical equipment and the control system. The Main DDC Controller shall be located in the Building Mechanical Room.

B. The Main DDC Controller shall have sufficient memory to support its own operating system and databases, including:
1. Control processes
2. Energy management applications
3. Alarm management applications including custom alarm messages for each level alarm for each point in the system.
4. Historical/trend data for all points specified and required for performing the sequence of operations specified.
5. Maintenance support applications
6. Custom processes
7. Operator I/O
8. Dial_up communications
9. Manual override monitoring

C. The Main DDC Controller shall support any combination of industry standard inputs and outputs.

D. Provide all processors, power supplies and communication controllers compatible so that the implementation of a point only requires the addition of the appropriate point input/output termination module and wiring.

E. The Main DDC Controller shall provide a minimum two RS_232C serial data communication ports for operation of operator I/O devices such as industry standard printers, operator terminals, modems and portable laptop operator's terminals. DDC Controllers shall allow temporary use of portable devices without interrupting the normal operation of permanently connected modems, printers or terminals.

F. The operator shall have the ability to manually override automatic or centrally executed commands at the Main DDC Controller via local, point discrete, on_board hand/off/auto override switches for digital control type points and gradual switches for analog control type points.
1. Switches shall be mounted either within the Main DDC Controller key_accessed enclosure, or externally mounted with each switch keyed to prevent unauthorized overrides.
2. The Main DDC Controller shall monitor the status of all overrides and inform the operator that automatic control has been inhibited for the specified points listed in the attached I/O summary. The Main DDC Controller shall also collect override activity information for reports.

G. The Main DDC Controller shall provide local LED status indication for each digital input and output for constant, up_to_date verification of all point conditions without the need for an operator I/O device. Graduated intensity LEDs or analog indication of value shall also be provided for each analog output. Status indication shall be visible without opening the panel door.

H. The Main DDC Controller shall continuously perform self_diagnostics, communication diagnosis and diagnosis of all panel components. The Main DDC Controller shall provide both local and remote annunciation of any detected component failures, low battery conditions or repeated failure to establish communication.

I. Isolation shall be provided at all peer_to_peer network terminations, as well as all field point terminations to suppress induced voltage transients consistent with IEEE Standards 587_1980.

J. In the event of the loss of normal power, there shall be an orderly shutdown of the Main DDC Controller to prevent the loss of database or operating system software. Non_volatile memory shall be incorporated for all critical controller configuration data and battery backup shall be provided to support the real_time clock and all volatile memory for a minimum of 72 hours.
1. Upon restoration of normal power, the Main DDC Controller shall automatically resume full operation without manual intervention.
2. Should the Main DDC Controller memory be lost for any reason, the user shall have the capability of reloading the Main DDC Controller via the local RS_232C port, via telephone line dial_in or from a network workstation PC.
3. DDC system shall have auto–restart after power loss.

2.6 MAIN DDC CONTROLLER RESIDENT SOFTWARE FEATURES:

A. General:

The software programs specified in this Section shall be provided as an integral part of the Main DDC Controller and shall not be dependent upon any higher level computer for execution.

B. Control Software Description:
1. The Main DDC Controllers shall have the ability to perform the following pre_tested control algorithms:
   a. Two_position control
   b. Proportional control
   c. Proportional plus integral control
   d. Proportional, integral, plus derivative control
   e. Automatic tuning of control loops

C. The Main DDC Controller shall have the ability to perform all the following energy management routines and be so programmed. Coordinate with the Owner to obtain all operating schedules. One copy (on CD ROM) of the programming software with schedules shall be given to the Owner at project acceptance for back up.
1. Time_of_day scheduling
2. Calendar_based scheduling
3. Holiday scheduling
4. Temporary schedule overrides
5. Start_Stop Time Optimization
6. Automatic Daylight Savings Time Switchover
7. Night setback control
8. Peak demand limiting
9. Temperature_compensated duty cycling
10. Print out alarm and alert responses.

D. The Main DDC Controller shall be able to execute custom, job_specific processes defined by the user, to automatically perform calculations and special control routines.
1. A single process shall be able to incorporate measured or calculated data from any and all other DDC Controllers in the air units. In addition, a single process shall be able to issue commands to points in any and all other DDC Controllers at the air units.
2. Processes shall be able to generate operator messages and advisories to operator I/O devices. A process shall be able to directly send a message to a specified device cause the execution of a dial_up connection to a remote device such as a printer or pager.

E. Alarm management shall be provided to monitor and direct alarm information to operator devices. The Main DDC Controller shall perform distributed, independent alarm analysis and filtering to minimize operator interruptions due to non_critical alarms, minimize network traffic and prevent alarms from being lost. At no time shall the Main DDC Controller ability to report alarms be affected by either operator, local I/O device or communications with other panels on the network.
1. All alarm or point change reports shall include the point's English language description and the time and date of occurrence.
2. The user shall be able to define the specific system reaction for each point. Alarms shall be prioritized to minimize nuisance reporting and to speed operator response to critical alarms. The Main DDC Controller shall automatically inhibit the reporting of selected alarms during system shutdown and start_up. Users shall have the ability to manually inhibit alarm reporting for each point.
3. Alarm reports and messages will be directed to a user_defined list of operator devices.
4. In addition to the point's descriptor and the time and date, the user shall be able to print, display or store a 200 character alarm message to more fully describe the alarm condition or direct operator response.
5. In dial_up applications, operator_selected alarms shall initiate a call to a remote operator device.

F. A variety of historical data collection utilities shall be provided to manually or automatically sample, store and display system data for points as specified in the I/O summary.
1. Any point, physical or calculated may be designated for trending. Any point, regardless of physical location in the network, may be collected and stored in the Main DDC Controller point group. Two methods of collection shall be allowed: either by a pre_defined time interval or upon a pre_defined change of value. Sample intervals of 1 minute to 7 days shall be provided. The Main DDC Controller shall have a dedicated RAM_based buffer for trend data and shall be capable of storing a minimum of 50 data samples. All trend data shall be available for use in 3rd party personal computer applications (i.e. Microsoft Excel).
2. The Main DDC Controller shall also provide high resolution sampling capability for verification of control loop performance. Operator_initiated automatic and manual loop tuning algorithms shall be provided for operator_selected PID control loops as identified in the point I/O summary.
   a. Loop tuning shall be capable of being initiated either locally at the DDC Controller, or remotely using dial_in modems. For all loop tuning functions and shall be limited to authorized personnel through password protection.

G. The Main DDC Controller shall automatically accumulate and store run_time hours for digital input and output points and automatically sample, calculate and store consumption totals for analog and digital pulse input type points, as specified in the point I/O summary.

H. The Main DDC Controller shall provide for control of central HVAC systems and equipment including, but not limited to, the following:
1. Powered Induction Units
2. Fans
4. Rooftop Units

I. Provide an ink–jet type printer for recording alarms, operator transactions and systems reports, meeting the following minimum requirements: 4 page per minute print speed at 600 dot per inch resolution. Manufacturer of the printer shall be Canon, IBM, HP, Epson, or Lexmark. Printer shall be located at the Building Main Mechanical Room.

J. Provide a laptop computer for graphical user interface. Laptop shall have state of the art processor capabilities with processing speed, RAM, and disc memory space sized to allow for real time interface with the controls system with no degradation in system response time capability. Laptop shall be complete with min. 17" screen, touch pad, 4 hour battery capability and spare battery, 2 network cable connections, integral wireless network interface card, 3 USB ports, memory card port, CD drive reader and burner, integral speakers, Windows operating system and all software required for interface with the controls system.

2.7 GRAPHICS:

A. The system graphical operator interface shall include a digital photo of the completed project on main page with links to each overall floor plan; building section; mechanical rooms, duct systems; and interfaces to associated controls systems (fire alarm, lighting controls, and security system).

B. Graphical floor plans shall indicate all equipment, motorized dampers, and sensors. System and equipment operating status, device positions, set points, and sensor readings shall be displayed. Provide full overall floor plans and either dynamic zoom or quick links to part plans.

C. Graphical schematic diagrams of equipment shall be provided for all monitored and controlled equipment; linked to plans and schematics; with all equipment and system input and output data indicated on and dynamically adjustable from the graphical displays.

D. Equipment operating status, device positions, control set points, and sensor status shall be displayed on all graphical drawings. System and equipment status and set points shall be dynamically modifiable direct from graphical drawings.

E. Graphical drawings shall indicate all equipment and device tags and shall reflect the final design drawings with all revisions all dimensional data and miscellaneous notes removed.

F. Control points naming for equipment and systems shall match the design drawings tags and shall provide logical naming for system components without tags (systems, dampers, sensors, set points, etc.) that include associated equipment tags where applicable. Generic manufacturer's default names only are not acceptable. Provide a link to a legend for control point naming convention.

2.8 FEATURES:

The BMS shall have at a minimum the following features:
1. Time of Day Scheduling (TOD)
2. Automatic Daylight Savings Time Changeover
3. Override TOD a each sensor with on/off & cancel
4. Morning Warm–up & Night Setback
5. CO2 Demand Ventilation
6. Internal Modem to alarm to alphanumeric pager. Annunciation to the page shall include: the name of the panel (site name), Device Name, Time/Date stamp, Alarm Text string for the alarm
7. Supply Air Temperature/Pressure Control
8. Discharge Air Temperature/Pressure Reset
9. Fan Pressure Optimization
10. Lighting Control TOD Scheduling
11. Graphic user interface touch pad to interrogate the system with password protection.

Each VAV RTU shall measure duct static pressure and modulate its VFD to maintain duct static pressure set point. Economizers shall be enabled when OA enthalpy is conducive for free cooling. Economizer dampers shall modulate to maintain mixed air temperature of 55F (adj) when the outside air temperature falls below this discharge air temperature set point (i.e. 55F adj). Each RTU will be equipped with a power exhaust fan for pressure relief during the economizer cycle. The following points shall be transferred to the BMS for control and alarming functions.
1. Unit operating mode
2. Unit failure status
3. Cooling failure
4. Emergency service stop indication
5. Supply fan proving
6. Timed override activation
7. Zone temperature
8. Supply air temperature
9. Cooling status (all stages)
10. Stage activated or not
11. Stage locked out by Controller
12. HPC status for each stage
13. LPC status for each stage
14. Compressor disable inputs
15. Number of stages activated
16. High temperature limit status
17. Economizer status
18. Enthalpy favorability status
19. Damper position
20. Outside air temperature
21. OAT sensor (Fail/Normal)
22. SAT sensor (Fail/Normal)
23. RAT sensor (Fail/Normal)
24. Zone temperature sensor (Fail/Normal)
25. Mode input (Fail/Normal)
26. Static pressure transducer (Fail/Normal)
27. Unit mounted potentiometer (Fail/Normal)
28. SAT from potentiometer (Fail/Normal)
29. Air reset set point from potentiometer (Fail/Normal)
30. Unit Configuration data (cooling with specific heat type)
31. Economizer present
32. Local set point
33. Local mode
34. VFD %
35. CO2 Level (As detailed on the Drawing)
36. Power Exhaust Fan Status

Each PIU shall communicate the following the following points shall be transferred to the BMS for control and alarming functions.
1. Cooling CFM
2. Heating/Cooling Setpoints
3. Zone Temperature (fail)
4. CO2 (As detailed on the Drawing)
5. Heat (fail/status)
6. Fan Status (on/off/fail)

PART 3 – EXECUTION

3.1 INSPECTION

A. Examine areas and conditions under which control systems are to be installed. Do not proceed with work until unsatisfactory conditions have been corrected in manner acceptable to installer.

3.2 INSTALLATION

A. General: Install systems and materials in accordance with manufacturer's instructions, roughing–in drawings, and the Contract Documents. The controls shall be installed to provide a completely functional and fully coordinated system of control. The controls shall include all components required to meet the specified sequences of operation.

B. Fasten flexible connections, bridging cabinets and doors, neatly along hinge side, and protect against abrasion.

C. Number–code or color–code control wiring for future identification and servicing of control system.

D. Controls, specialties, and accessories shall be installed so as to allow ready accessibility for operating, servicing, maintaining, and repairing.

E. The Contract Documents have been prepared with consideration given to avoid interferences with other trades and building appurtenances; however, interferences may exist. It is the responsibility of the controls Contractor to coordinate the activities to eliminate all interferences.

F. Contract Documents shall be considered schematic only, and are not intended to indicate all changes in direction and necessary fittings to be provided by the Contractor. Conduit and piping may be relocated or offset for proper clearances. Deviations from Contract Documents shall have the Owner's Representative's approval prior to submitting bids. Cost of these deviations to avoid interferences shall be a part of the original contract.

G. The design intent, i.e., pitches, velocities, pressure drops, voltage drops, cable pulling tensions, etc., shall not be greatly altered without the approval of the Owner's Representative.

H. RECORD drawings shall reflect ALL deviations.

3.3 SEQUENCES OF OPERATION

A. GENERAL

1. DDC system: Provide full DDC control and monitoring of all mechanical systems. The following sequences represent the level of control desired. Refer to equipment specifications for information on digital controllers supplied from factory with HVAC equipment. DDC system provided in this section shall interface with factory and field installed digital system controllers.
2. Failsafe Operation: Install all digital outputs, and normal valve positions for fail–safe operation to full mechanical cooling.

B. Airside Systems

1. Single Zone Constant Volume Packaged Rooftop Units (RTU's): shall be supplied with Product Integrated Controls from the equipment manufacturer or field installed.
2. The RTU shall be provided with a unit control panel which will interface with the remainder of the DDC SYSTEM and provide standalone controls to operate the unit at default operating parameters in the event of DDC SYSTEM failure (or loss of communication with the network).
   a. Occupied mode:
      1) The fan shall run continuously during "Occupied Mode", the mixing box air damper shall open to the minimum outside air position after morning warm–up cycle is complete. Unit fans shall shut down upon any safety device sensing an abnormal condition and signal the DDC control panel and the network printer.
      2) The following functions shall be performed:
         a) The Rooftop Unit (RTU) fan shall cycle with compressor or heat operation during the "Occupied Mode".
         b) The RTU cooling shall be turned ON and the cooling control shall be interlocked with its condensing section to energize the compressors and condenser fans and RTU supply fan as required to maintain a supply duct temperature set point of 55F, adjustable. The supply fan shall modulate to maintain maximum pressure duct static pressure setpoint of 1.0" to 1.5" (adjustable). The PIU's shall modulate primary air dampers to supply air to the spaces to maintain space temperatures of 75F, adjustable.
         c) RTU heating control shall be interlocked with its electric heating coil stages to operate in conjunction with the supply fan to maintain a minimum supply air temperature of 55°F, adjustable. Heating coil shall not energize until air flow is confirmed via an air flow switch mounted downstream of the RTU. Heating shall operate during morning warm up mode, and during cooling mode in winter when OA dampers have closed to minimum positions and heat is required to maintain 55F mixed (RA/OA) air temperature.
         d) RTU OA dampers shall modulate in response to space CO2 sensors to maintain 800 ppm maximum (adjustable) at the worst case sensor reading.
         d) Outside air economizer system: When the outside air conditions are suitable and the unit is in the cooling mode, the controller shall modulate the outside air, relief air, and return air dampers and powered relief fan to provide free cooling. Powered relief fan VFD shall modulate and track with supply fan VFD to maintain a positive building pressurization of 0.05" to 0.25" WG (adjustable).
   b. Unoccupied mode:
      1) The unit shall be indexed to the Unoccupied mode through any of the following: remote override contact, expiration of remote timed override, network occupancy schedule, or local thermostat occupancy schedule:
         a) Unoccupied heating shall be provided by the PIU's when the space temperature falls below the unoccupied heating setpoint of 60F (adjustable). Should the space temperature fall below 55F (adjustable), the supply fan shall start and the PID heating coil algorithm shall modulate a the RTU heater to assist the PIU's to maintain the unoccupied heating set point. During unoccupied heating, the outside–air dampers shall remain closed and the RTU shall recirculated only. The supply fan and RTU heater shall turn OFF when the unoccupied space temperature reaches set point of 55F.
         b) Unoccupied cooling shall be provided if the space temperatures reach 85F, adjustable. The RTU cooling shall be turned ON, the supply fan shall modulate to maintain medium pressure duct static pressure setpoint of 1.0" to 1.5" (adjustable), and the PIU's shall modulate primary air dampers to supply air to the spaces. The supply fan shall turn OFF when all space temperatures are below the desired space temperature set point of 85F.
         c) Remote timed override of the unit from the Un–occupied mode to the Occupied mode shall be standard on each unit. The space temperature sensor shall contain an override button that will index the unit to the Occupied mode for up to 4 hours.
         d) Remote Override Capability shall also be provided through an external dry contact input. Whenever the contact input is shorted by an external device, the unit shall operate in occupied mode. When the contact opens, the unit will revert back to normal operation.
         e) Optimal start shall heat or cool the controlled space prior to occupancy. The algorithm shall utilize space temperature, and individual building recovery factors for heating and cooling as well as the occupancy schedule.
   c. Safety devices shall be as follows:
      1) Smoke detector in supply ducts of air units for 2000 CFM and above capacity; activation shall send a signal to the fire alarm system. Provide smoke detector override to re–start AHU's required to operate during smoke control operation as specified herein.
      2) Freezestats located on the inlet of the cooling coil shall shut down fans and close the out–side air dampers if temperature below 40F is sensed by any one foot of the element. Activation of the freezestat shall initiate an alarm at the network printer.
      3) Units' fan shutdown from the duct detectors shall be provided by the automatic temperature controls contractor. Contractor shall coordinate this alarm condition for providing a signal to the fire alarm system.
      4) The units shall run subject to smoke detectors and shall be interlocked to the building Fire Alarm System and shall be OFF during alarm.
3. Additional control sequences:
   a. Supply Air Static Pressure Reset – The DDC SYSTEM shall scan all Terminal Units which are in the occupied mode and being supplied air by the AHU. The maximum air valve/damper position shall be noted as the critical zone. If the critical zone is greater than 95% open then the AHU Supply Air Static Pressure Setpoint shall be reset down .1" wg every 10 minutes until the critical zone is less than 95% open. Minimum Supply Air Static Pressure Setpoint shall be .5" wg. If the critical zone is less than 85% open, then the AHU Supply Air Static Pressure Setpoint shall be reset upward .1" wg every 10 minutes until the critical zone is greater than 85% open. Maximum Supply Air Static Pressure Setpoint shall be 2.0" wg.
   i. Supply Air Temperature Reset – If the DDC SYSTEM has reset the Supply Air Static Pressure to it maximum or minimum setpoints and the critical zone damper position is still greater that 95% or less than 85% then the DDC SYSTEM shall begin to adjust the Supply Air Temperature Setpoint in the manner described above. Reset shall be 1 degree F every 10 minutes and shall not be reset lower than 55 degrees F or greater than 62 degrees F.
   j. Startup Mode _ When the unit is turned ON prior to building occupation by the DDC SYSTEM for optimal start, heating or cooling is provided as required by space temperature. The DDC SYSTEM holds the AHU supply fan OFF in the heating mode until the zone temperature is greater than the user entered occupied heating setpoint. The outside air damper shall remain closed until the occupied time of the zone. When the Terminal units zone temperatures reach setpoint, the AHU fan shall start. In morning warm–up mode, Terminal Units shall control to occupied heating setpoint
   k. Demand Limit Mode _ Under conditions of high electrical demand, Terminal Units cooling setpoints shall be automatically raised by an operator defined amount. The reduced cooling requirement unloads the AHU. Temperature limits will be provided to ensure occupant comfort.
   l. Night Setback Temperature Control _ During unoccupied hours, the system shall be controlled by the DDC SYSTEM to maintain user defined unoccupied heating and cooling setpoints in the space. The outdoor air damper shall remain closed during night setback operation.
      1) Associated Terminal Units control to their unoccupied heating and cooling setpoints.
   m. Outdoor Air Ventilation Control _ The use of outdoor air for ventilation shall be provided only during scheduled hours of occupancy and during periods of timed override.
   n. Low Ambient Compressor Lockout _ Compressor operation shall be disabled below a user defined outdoor air temperature.
   o. Timed Override _ When a timed override is initiated by the user, the system will return to its normal occupied mode for a user determined period of time. When the timed override period has ended, the unit shall automatically shut down. The DDC SYSTEM shall monitor and store the override time for each timed override input for documentation of after_ hours operation.
      1) Terminal Units in the effected zone shall control to their occupied setpoints while the unit is in timed override operation.
   p. Emergency Shutdown _ The unit will shut down in response to a customer supplied contact closure to the DDC SYSTEM indicating the presence of a fire or other emergency condition.
   q. Diagnostics/Protection _ The DDC SYSTEM system shall be able to alarm from all sensed points from the self contained units and diagnostic alarms sensed by the unit controller. Alarm limits shall be designated for all sensed points.
   r. The DDC SYSTEM shall graphically display the following points for the RTU.
      - Supply Fan – VFD status and % speed
      - Supply Air temperature
      - Supply Air temperature setpoint
      - Supply Air pressure
      - Supply Air pressure setpoint
      - Economizer status
      - Status of all compressors on/off
      - Control state of all compressors on/off
      - Dirty Filter
      - Mixed Air Temperature
      - Specific Alarm diagnostic messages which occur at the AHU Control Panel
   s. A low limit temperature sensor (set at 35 F) located at AHU inlet shall stop the supply fan and close the associated outside air damper when the mixed air temperature falls below set point.
   t. Air filters shall have both a filter gauge and a filter differential switch for alarm to the DDC SYSTEM.
3. Terminal Units:

A. The powered induction units (PIU's) shall be monitored by the DDC SYSTEM for the following points: space temperature, space cooling setpoint, space heating setpoint, air valve position (% of full open), PIU fan status (off/on) and PIU electric heat operation (% energized).

B. The PIU's shall run subject to the building's fire alarm system and shall be OFF during alarm.

C. The PIU's shall be provided with individual unit control which will interface with the remainder of the DDC SYSTEM and provide standalone controls to operate the terminal units at default operating parameters in the event of DDC SYSTEM failure (or loss of communication with the network).

D. The terminal units shall be controlled by the DDC SYSTEM, via space sensors, as follows:
1. Normal operation: the "series" type PIU fan shall operate continuously, with primary air valve and electric heat (where applicable) sequenced to maintain setpoints (75F cooling, 72F heating, adjustable). The "parallel" type PIU fan shall only operate upon a call for heating.
2. Setback operation: the primary air valve shall be fully closed and the PIU fan and electric heat shall operate intermittently to maintain setpoint (65F, adjustable).
3. After Hours operation: the affected unit(s) shall operate per sequences for Normal operation.
4. Warm–Up operation: the primary air valve shall be fully closed, with the PIU fan and electric heat operating intermittently as required to maintain setpoint specified for Normal operation. Start time optimization shall be utilized for the Warm–Up cycle.

E. PIU fans shall be interlocked, except during Warm–up (see below) and Setback operation, with the AHU. The DDC SYSTEM shall provide enable/disable control of the PIU's. When PIU fan is off, air valves shall go to their minimum open position.

F. The norm

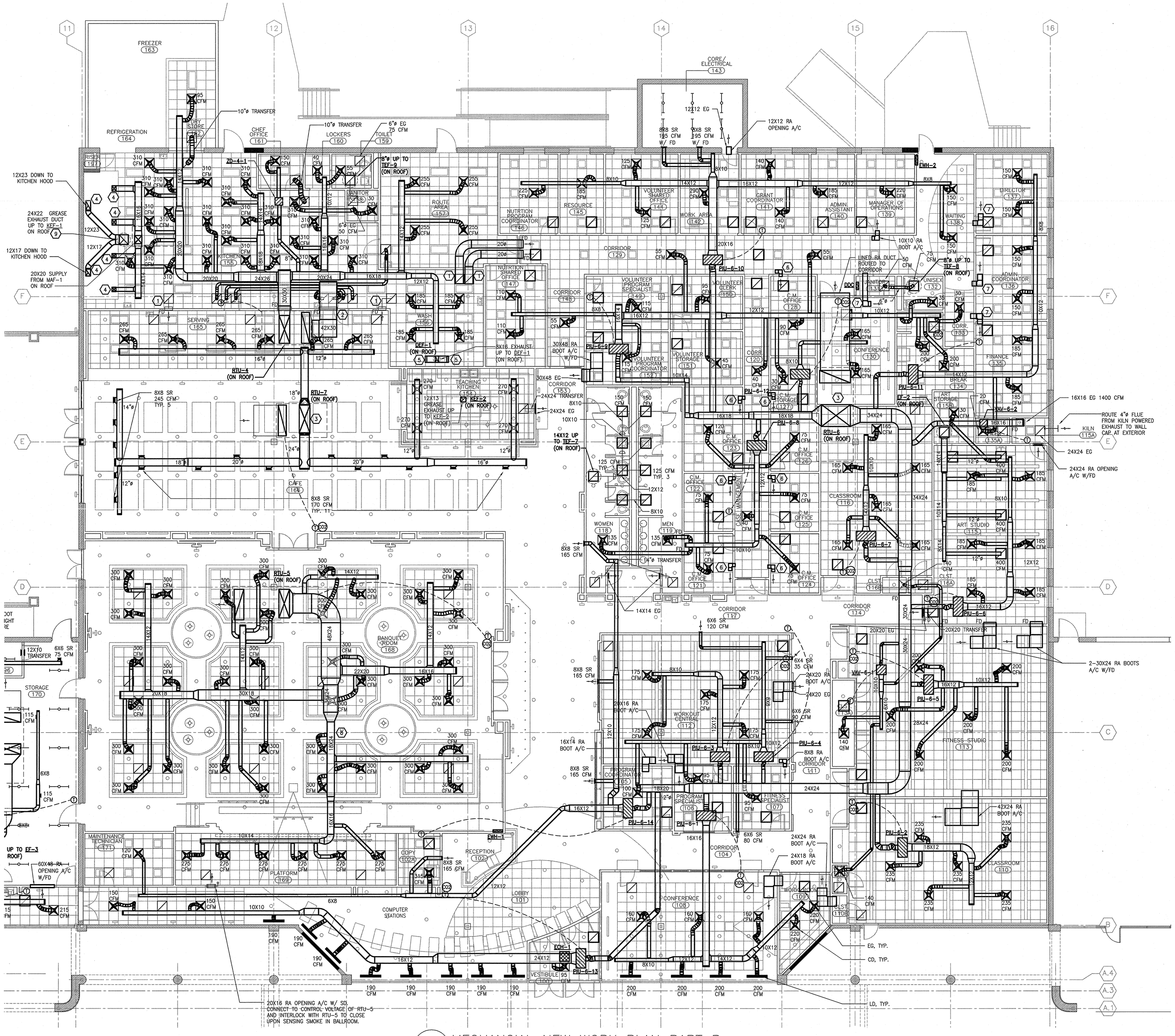

KEYED NOTES:

1. 24X24 EG. IN KITCHEN W/ 20"ø DUCT TO PLENUM OF ADJACENT SPACE FOR TRANSFER.
2. 20"ø EG. DUCTED TO RTU-4 RETURN DUCT TYP. 8.
3. SUPPLY DUCT DOWN FROM RTU-6,7 TO HAVE RADIUSED WYE FITTING IN VERTICAL. FITTING TO COMPLY W/ SMACNA STANDARDS.
4. SEE KITCHEN DRAWINGS FOR CONNECTIONS AND AIRFLOWS AT HOOD.
5. SEE KITCHEN DRAWINGS FOR CONNECTIONS AND AIRFLOWS AT HOOD. CONTRACTOR TO CONFIRM UNIT GOES RIGHT TO LEFT. RIGHT (IN) 200 CFM. LEFT (OUT) 400 CFM.
6. 8X8 RA BOOT A/C.
7. 12X12 RA BOOT A/C.
8. ROUTE MEDIUM PRESSURE DUCT THROUGH GIRDERS AT LOCATIONS SHOWN. COORDINATE RE-FRAMING OPENINGS W/ STRUCTURAL DRAWINGS.
9. INSTALL KEF-1 SUCH THAT DISCHARGE OUTLET IS A MINIMUM OF 40" ABOVE MAF-1 INTAKE.

GENERAL NOTES:

1. CONTRACTOR TO LOCATE RTU'S AND OFFSET SUPPLY AND RETURN DUCTS FROM RTU'S IN VERTICAL TO AVOID MODIFICATION OF BUILDING STRUCTURAL ELEMENTS. COORDINATE EXACT LOCATIONS WITH ARCHITECT AND STRUCTURAL ENGINEER.
2. CONTRACTOR TO COORDINATE DIFFUSER LOCATIONS WITH ARCHITECTURAL REFLECTED CEILING PLANS. ARCH RCP GOVERNS.

1 / M200 MECHANICAL NEW WORK PLAN PART B
1/8"=1'-0"

HESM&A
CONSULTING ENGINEERS
ATLANTA - JACKSON - CHARLOTTE
125 COLLIER ROAD
ATLANTA, GA 30309-2008
(404) 352-3320 • FAX (404) 352-0909
GEORGIA BOARD NO. - 259
ATL01112

© 2010 SIZEMORE GROUP

GEORGE M. SIZEMORE REGISTERED ENGINEER GEORGIA

Drawn: SM
Checked: CO
Date: 12/13/10
Job No.: 09121POWDER

Revisions:

No.	Date

POWDER SPRINGS STATION RENOVATION – SENIOR CENTER
1150 POWDER SPRINGS STREET – MARIETTA, GEORGIA 30060

THE DRAWING IS AN INSTRUMENT OF SERVICE AND IS THE PROPERTY OF THE ARCHITECT. THE ARCHITECT SHALL RETAIN OWNERSHIP AND THE COPYRIGHT. THE DRAWING SHALL NOT BE LOANED, COPIED OR REPRODUCED WITHOUT THE WRITTEN CONSENT OF THE ARCHITECT.

sizemoregroup

Title: MECHANICAL NEW WORK PLAN PART B
Scale: 1/8"=1'-0"
Sheet: M200
of:

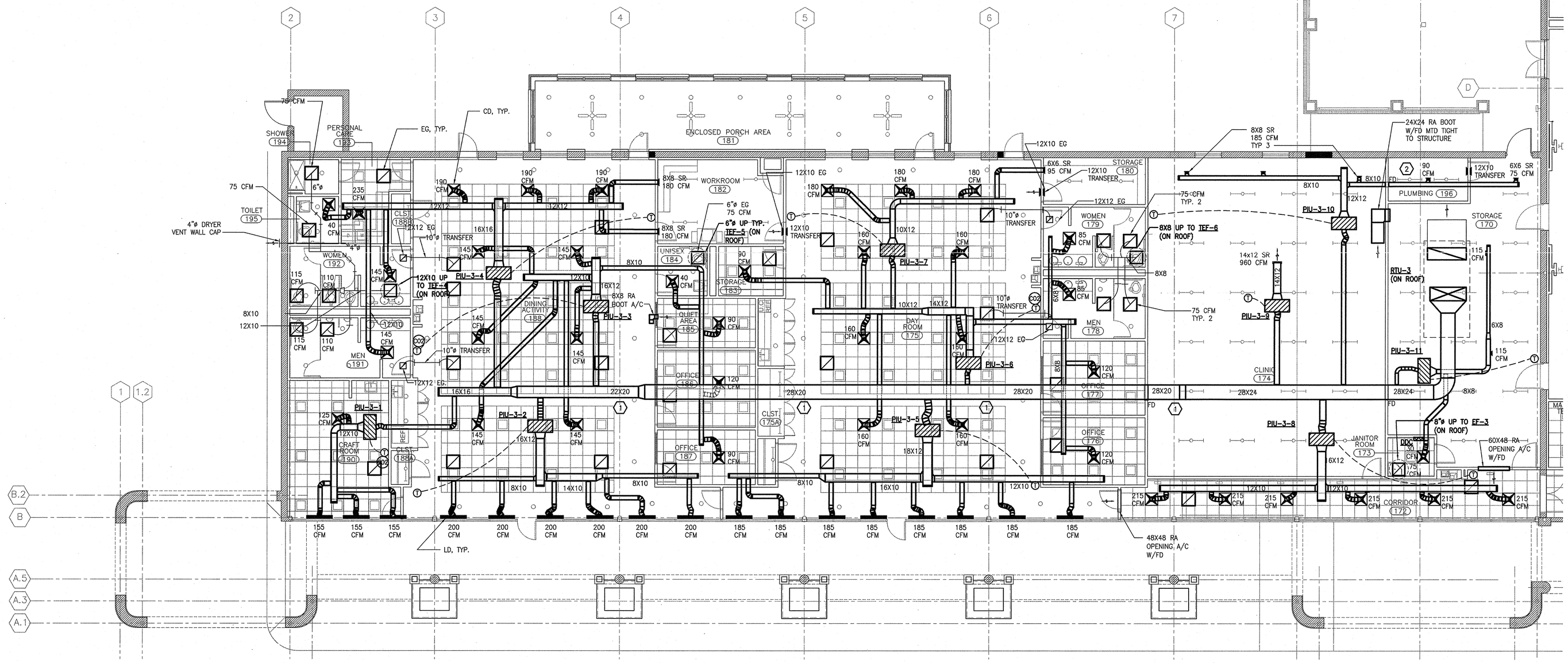

1 M201 MECHANICAL NEW WORK PLAN PART A

1/8"=1'-0"

KEYED NOTES:

1. ROUTE MEDIUM PRESSURE DUCT THROUGH GIRDERS AT LOCATIONS SHOWN. COORDINATE RE-FRAMING OPENINGS W/ STRUCTURAL DRAWINGS.
2. ROUTE TWO (2) 3" PVC COMBUSTION AIR INTAKE PIPES AND TWO (2) 3" PVC FLUE VENT PIPES FROM WATER HEATERS UP THROUGH ROOF AND TERMINATE WITH SCREENED GOOSENECK. COMBUSTION AIR INTAKES AND FLUE VENTS TO BE INSTALLED A MINIMUM OF 10 FT. APART.

GENERAL NOTES:

1. CONTRACTOR TO LOCATE RTU'S AND OFFSET SUPPLY AND RETURN DUCTS FROM RTU'S IN VERTICAL TO AVOID MODIFICATION OF BUILDING STRUCTURAL ELEMENTS. COORDINATE EXACT LOCATIONS WITH ARCHITECT AND STRUCTURAL ENGINEER.
2. CONTRACTOR TO COORDINATE DIFFUSER LOCATIONS WITH ARCHITECTURAL REFLECTED CEILING PLANS. ARCH RCP GOVERNS.

HVAC ABBREVIATIONS

ABBREVIATION	DEFINITION	ABBREVIATION	DEFINITION
A/C	ABOVE CEILING	MAX	MAXIMUM
AD	ACCESS DOOR	MBH	1000 BTU/HOUR
ADJ	ADJUSTABLE	MD	MANUAL DAMPER
AFF	ABOVE FINISHED FLOOR	MIN	MINIMUM
ARCH	ARCHITECT	MOD	MOTOR OPERATED DAMPER
BEL	BELOW	MOV	MOTOR OPERATED VALVE
BD	BACKDRAFT DAMPER	MTD	MOUNTED
B/F	BELOW FLOOR	N/A	NOT APPLICABLE
BTUH	BRITISH THERMAL UNIT/HOUR	NC	NOISE CRITERIA
C	CONVECTOR	N.C.	NORMALLY CLOSED
CAP	CAPACITY	N.I.C.	NOT IN CONTRACT
CD	CEILING DIFFUSER	N.O.	NORMALLY OPEN
CF	CUBIC FEET	NO.	NUMBER OR DESIGNATION
CFM	CUBIC FEET PER MINUTE	NOM	NOMINAL
CLG	CEILING	NPSHA	NET POSITIVE SUCTION HEAD AVAIL
CO	CLEANOUT	OA	OUTSIDE AIR
CONC	CONCRETE	OBD	OPPOSED BLADE DAMPER
CONN	CONNECTION	OC	ON CENTERS
CONT	CONTINUATION	OPNG	OPENING
D	DRAIN	ΔP	PRESSURE DROP
DB	DRY BULB	PH	ELECTRICAL PHASE
DG	DOOR GRILLE	PIU	POWERED INDUCTION UNIT
DIA	DIAMETER (ϕ)	PLBG	PLUMBING
DIFF	DIFFUSER	PRV	PRESSURE REDUCING VALVE
DN	DOWN	PSIA	POUNDS PER SQ. IN. ABSOLUTE
DWGS	DRAWINGS	PSIG	POUNDS PER SQ. IN. GAUGE
EA	EACH	RA	RETURN AIR
EAT	ENTERING AIR TEMPERATURE	RAG	RETURN AIR GRILLE
EG	EXHAUST GRILLE	RAR	RETURN AIR REGISTER
ELEC	ELECTRICAL	REG	REGISTER
ENG	ENGINEER	R/H	RELATIVE HUMIDITY
ER	EXHAUST REGISTER	RL	REFRIGERANT LIQUID
ESP	EXTERNAL STATIC PRESSURE (IN WG)	RPM	ROTATIONS PER MINUTE
EWT	ENTERING WATER TEMPERATURE	RS	REFRIGERANT SUCTION
EXH	EXHAUST	SA	SUPPLY AIR
FA	FREE AREA	SD	SPLITTER DAMPER
FD	FIRE DAMPER	SF	SQUARE FEET
FLR	FLOOR	SG	SUPPLY GRILLE
FLEX	FLEXIBLE	SP	STATIC PRESSURE (IN. W.G.)
FOD	FACE OPERATED DAMPER	SQ	SQUARE
FPM	FEET PER MINUTE	SR	SUPPLY REGISTER
FSD	FIRE/SMOKE DAMPER	SS	STAINLESS STEEL
FT	FEET	STR	STRUCTURAL
GAL	GALLON(S)	TE	TOILET EXHAUST
GPM	GALLONS PER MINUTE	TG	TRANSFER GRILLE
GR	GRILLE	THRU	THROUGH
HD	HEAD (FT WC)	TRANS	TRANSITION
HP	HORSEPOWER	T'STAT	THERMOSTAT
HR	HOUR	TYP	TYPICAL
IN	INCHES	UC	UNDERCUT
KW	KILOWATT	UNO	UNLESS NOTED OTHERWISE
L&S	LOUVER & SCREEN	VAV	VARIABLE AIR VOLUME UNIT
LAT	LEAVING AIR TEMPERATURE	VEL	VELOCITY
LBG	LINEAR BAR GRILLE	W/	WITH
LBS.	POUNDS	WB	WET BULB
LSD	LINEAR SLOT DIFFUSER	WC	WATER COLUMN
LF	LINEAR FEET	WG	WATER GAUGE
LWT	LEAVING WATER TEMPERATURE	°F	DEGREES FAHRENHEIT

NOTE: THESE ARE STANDARD ABBREVIATIONS. ALL ITEMS MAY NOT APPEAR ON DRAWINGS.

HVAC LEGEND

SYMBOLS	DESCRIPTION
	SUPPLY AIR DEVICE
	RETURN/EXHAUST AIR DEVICE
	LINED DUCTWORK
	FLEXIBLE DUCT CONNECTION
	EXISTING EQUIPMENT TO REMAIN
	EXISTING EQUIPMENT RELOCATED
	EXISTING EQUIPMENT TO BE REMOVED
	END CAP (PIPE OR DUCT)
R	DUCT RISE
D	DUCT DROP
M.D.	MANUAL DAMPER
FD FD	FIRE DAMPER (HORIZONTAL/VERTICAL)
FSD	MOTOR OPERATED FIRE SMOKE DAMPER
M	MOTOR OPERATED DAMPER
T / S / H	THERMOSTAT/SENSOR/HUMIDISTAT
SD	SMOKE DETECTOR
D	DRAIN
CWS / CWR	CONDENSER WATER SUPPLY/CONDENSER WATER RETURN
CHWS / CHWR	CHILLED WATER SUPPLY/CHILLED WATER RETURN
HWS / HWR	HEATING WATER SUPPLY/HEATING WATER RETURN
RS / RL	REFRIGERANT LINE (SUCTION/LIQUID)
	BALL VALVE
	BUTTERFLY VALVE (BV)
	GATE VALVE (GV)
	3-WAY CONTROL VALVE
	NON-SLAM CHECK VALVE (CV)
	PRESSURE REDUCING VALVE
	STRAINER
	GAUGE COCK
	PRESSURE GAUGE
	THERMOMETER
OR	TEST WELL
	UNION
	FLANGE
	PUMP

NOTE: THIS IS A STANDARD LEGEND. ALL ITEMS MAY NOT APPEAR ON DRAWINGS.

NOTES:

1. ALL SEAMS & JOINTS SHALL HAVE A LIQUID TIGHT CONTINUOUS EXTERNAL WELD, EXCEPT WHER THE DUCT CONNECTS TO THE FAN.
2. ALL DUCTS SHALL BE INSTALLED WITHOUT FORMING DIPS OR TRAPS WHICH MIGHT COLLECT RESIDUES.
3. ACCESS PANELS LARGE ENOUGH TO PERMIT CLEANING AND INSPECTION SHALL BE PROVIDED AT EACH CHANGE IN DIRECTION OF THE DUCT. OPENINGS SHALL BE AT SIDES OF DUCT AND AS SHOWN. ACCESS PANELS SHALL BE CONSTRUCTED OF THE SAME MATERIAL & THICKNESS OF DUCT AND SHALL BE GREASE TIGHT WHEN IN PLACE.
4. DUCTS SHALL BE 16 GAUGE BLACK STEEL.
5. ACCESS PANELS MAY BE EITHER UPSTREAM OR DOWNSTREAM OF ELBOWS. LOCATE FOR BEST POSSIBLE MAINTENANCE ACCESS ACCORDING TO FIELD CONDITIONS. COORDINATE W/ GENERAL CONSTRUCTION ACCESS DOOR IN WALLS, FLOORS, CLGS., ETC.
6. DUCTS SHALL BE INSTALLED IN ACCORDANCE WITH NFPA 96.

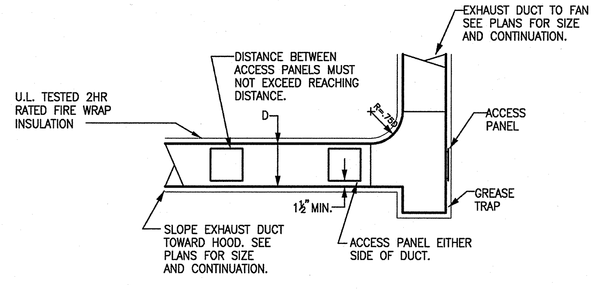

2 M201 EXHAUST DUCT FROM KITCHEN HOOD

NOT TO SCALE

HESM&A
CONSULTING ENGINEERS
ATLANTA - JACKSON - CHARLOTTE
1255 COLLIER ROAD
ATLANTA, GA 30318-2308
(404) 355-5300 - FAX (404) 355-0909
GEORGIA BOARD NO. - 939
ATL0112

© 2010 SIZEMORE GROUP

GEORGIA REGISTERED PROFESSIONAL ENGINEER DAVID B. CLIFFORD 12/13/10

Drawn: SM
Checked: CO
Date: 12/13/10
Job No.: 09121POWDER

Revisions:

No.	Date

POWDER SPRINGS STATION RENOVATION – SENIOR CENTER
1150 POWDER SPRINGS STREET – MARIETTA, GEORGIA 30060

THE DRAWINGS & SPECIFICATIONS AS INSTRUMENTS OF SERVICE ARE AND SHALL REMAIN THE PROPERTY OF THE ARCHITECT WHOSE LEGAL RIGHTS ARE RESERVED. THE REPRODUCTION, ALTERATION OR REPUBLICATION WITHOUT THE WRITTEN PERMISSION OF THE ARCHITECT VIOLATES THE LAW OF COPYRIGHT.

sizemore group

Title: MECHANICAL NEW WORK PLAN PART A

Scale: 1/8"=1'-0"

Sheet: M201

of:

PACKAGE ROOFTOP AIR CONDITIONING UNIT SCHEDULE

UNIT NUMBER	SERVICE	UNIT TYPE DESCRIPTION	OUTDOOR AIR (CFM)	(2) SUPPLY FAN DATA CFM	(2) SUPPLY FAN DATA EXTERNAL S.P. (IN. W.G.)	FAN MOTOR HP	(3) EXHAUST FAN DATA CFM	(3) EXHAUST FAN DATA EXTERNAL S.P. (IN. W.G.)	(3) EXHAUST FAN DATA MOTOR HP	DIRECT EXPANSION COOLING COIL SENSIBLE (MBH)	TOTAL (MBH)	EAT (°F) DB	EAT (°F) WB	LAT (°F) DB	LAT (°F) WB	FACE VELOCITY (FPM)	COMPRESSOR DATA NO.	NO. OF STAGES	GAS HEATING (11) OUTPUT MBH	EFFICIENCY (%)	FILTER EFFICIENCY (%)	SINGLE POINT POWER CONNECTION MOTORS VOLTS	PHASE	EER	SELECTION BASED ON	REMARKS
RTU-3	SENIOR CTR	STANDARD VAV	2530	11,000	1.25	10	10,000	0.25	–	245.0	348.9	83.1	66.8	55	52.7	500	2	2	128	81	(10)	208	3	10.3	TRANE YCD360	(1)(2)(3)(4)(5) (7)(8)(9)
RTU-4	KITCHEN	SINGLE ZONE CV	250	9,500	1.0	10	–	–	–	215.3	221.0	80	67	55	52	500	2	2	193	81	(10)	208	3	11.0	TRANE YCD301	(1) (6)(7)(8) (12)
RTU-5	BANQUET	SINGLE ZONE VAV	3200	12,500	1.0	10	11,250	0.25	–	245.8	394.6	83.1	68.8	55	52.6	500	2	2	383	81	(10)	208	3	10.3	TRANE YCD420	(1)(2)(3)(4)(5) (7)(8)(13)(12)
RTU-6	OFFICE/CLASS	STANDARD VAV	3685	16,500	1.5	20	15,000	0.25	–	413.4	577.3	82.0	66.2	55	52.5	500	3	3	183	81	(10)	208	3	10.3	TRANE YCD600	(1)(2)(3)(4)(5) (7)(8)(14)
RTU-7	CAFE	SINGLE ZONE CV	1270	6,500	1.0	5	5,750	0.25	–	152.5	214.7	79.8	65.2	55	52.7	500	2	2	201	81	(10)	208	3	12.0	TRANE YCD211	(1) (4) (7)(8)(15)(12)

(1) PROVIDE UNIT MANUFACTURERS 14" CUSTOM ROOF CURB TO MATCH ROOF SLOPE.
(2) PROVIDE VFD SUPPLY FAN MOTOR
(3) PROVIDE FULLY MODULATING DISCHARGE DAMPERS CONTROLLED BY BMS OR UNIT MOUNTED STATIC PRESSURE CONTROLLER DURING ECONOMIZER MODE.
(4) PROVIDE 100% OA ECONOMIZER MODE PACKAGE WITH POWERED EXHAUST.
(5) PROVIDE BUILDING PRESSURE CONTROLLER FOR ECONOMIZER MODE.
(6) PROVIDE VARITRAC CONTROLS SYSTEM.
(7) PROVIDE GASKETED HINGED ACCESS DOOR W/ CAM LOCK HANDLES FOR CONTROL PANEL AND FILTER SECTION.
(8) PROVIDE MANUFACTURER'S DISCONNECT AND THRU BASE ELECTRICAL CONNECTION.
(9) PROVIDE CO2 MONITORING FOR DEMAND CONTROL VENTILATION OA DAMPER MINIMUM SHALL BE SET TO 1110 CFM FOR POSITIVE BUILDING PRESSURIZATION.
(10) PROVIDE MERV 13 FILTER.
(11) PROVIDE FULLY MODULATING GAS HEAT OPTION
(12) PROVIDE HOT GAS REHEAT OPTION
(13) PROVIDE CO2 MONITORING FOR DEMAND CONTROL VENTILATION OA DAMPER MINIMUM SHALL BE SET TO 2780 CFM FOR POSITIVE BUILDING PRESSURIZATION.
(14) PROVIDE CO2 MONITORING FOR DEMAND CONTROL VENTILATION OA DAMPER MINIMUM SHALL BE SET TO 3200 CFM FOR POSITIVE BUILDING PRESSURIZATION.
(15) PROVIDE CO2 MONITORING FOR DEMAND CONTROL VENTILATION OA DAMPER MINIMUM SHALL BE SET TO 1100 CFM FOR POSITIVE BUILDING PRESSURIZATION.

FAN SCHEDULE

UNIT NUMBER	SERVICE	LOCATION	FAN TYPE	CFM	STATIC PRESSURE (IN. W.G.)	FAN RPM	DRIVE	MOTOR DATA AT 60HZ HP (W)	VOLTS	PHASE	SELECTION BASED ON	REMARKS
TEF-4	TOILET EXHAUST	ROOF	CENTRIFUGAL DOWNBLAST	600	0.375	1085	B	1/4	120	1	GREENHECK GB-101-4	(1)(2)(3)(4)(5)(6)
TEF-5	TOILET EXHAUST	ROOF	CENTRIFUGAL DOWNBLAST	75	0.25	819	B	1/6	120	1	GREENHECK GB-071-6	(1)(2)(3)(4)(5)(6)
TEF-6	TOILET EXHAUST	ROOF	CENTRIFUGAL DOWNBLAST	300	0.375	1057	B	1/6	120	1	GREENHECK GB-081-6	(1)(2)(3)(4)(5)(6)
TEF-7	TOILET EXHAUST	ROOF	CENTRIFUGAL DOWNBLAST	1050	0.5	1543	B	1/4	120	1	GREENHECK GB-101-4	(1)(2)(3)(4)(5)(6)
TEF-8	TOILET EXHAUST	ROOF	CENTRIFUGAL DOWNBLAST	125	0.25	948	B	1/6	120	1	GREENHECK GB-071-6	(1)(2)(3)(4)(5) (7)
TEF-9	TOILET EXHAUST	ROOF	CENTRIFUGAL DOWNBLAST	125	0.25	948	B	1/6	120	1	GREENHECK GB-071-6	(1)(2)(3)(4)(5) (7)
EF-2	ART ROOM 115	ROOF	CENTRIFUGAL DOWNBLAST	1200	0.5	1276	B	1/4	120	1	GREENHECK GB-121-4	(1)(2)(3)(4)(5)(6)
EF-3	JANITOR 173	ROOF	CENTRIFUGAL DOWNBLAST	75	0.25	819	B	1/6	120	1	GREENHECK GB-071-6	(1)(2)(3)(4)(5) (7)
DEF-1	DISHWASHER EXH	ROOF	CENTRIFUGAL UPBLAST	600	0.5	1560	B	1/4	120	1	GREENHECK CUBE-098-4	(1)(2)(3)(4)(5) (8)
KEF-2	HOOD EXHAUST	ROOF	CENTRIFUGAL UPBLAST	1540	1	1410	B	1/2	120	1	GREENHECK CUBE-141-5	(1)(2)(3)(4)(5) (8)
KEF-1	HOOD EXHAUST	ROOF	CENTRIFUGAL UPBLAST	4835	1.5	1131	B	3	208	3	GREENHECK CUBE-220HP-30	(1)(2)(3)(4)(5) (8)
MAF-1	HOOD SUPPLY	ROOF	INDIRECT GAS SUPPLY	2902	0.5	1168	B	1-1/2	208	3	GREENHECK IG-110-H20	(1)(2)(3)(4)(5) (8)

(1) PROVIDE UNIT MANUFACTURERS FAN MOUNTED DISCONNECT SWITCH.
(2) PROVIDE UNIT MANUFACTURERS MATCHING 12" ROOF CURB.
(3) PROVIDE BACKDRAFT DAMPER
(4) CONTROLLED BY BMS
(5) PROVIDE BIRD SCREEN
(6) CONTROL FAN WITH DDC SYSTEM TO RUN DURING ALL OCCUPIED HOURS AND SHUT OFF DURING UNOCCUPIED HOURS.
(7) FAN SHALL OPERATE 24/7.
(8) INTERLOCK FAN W/ HOOD SWITCH.

FAN POWERED INDUCTION UNIT SCHEDULE

UNIT NUMBER	MAXIMUM PRIMARY AIR FLOW (CFM)	MINIMUM PRIMARY AIR FLOW (CFM)	INLET UNIT DIA. (2)	MAX NC	MINIMUM INLET PRESSURE (IN. WG)	FAN DATA CFM	FAN DATA E.S.P. (IN. WG)	FAN MOTOR DATA HP	VOLTS	PHASE	ELECTRIC HEATING COIL (3) KW	V	PH	SELECTION BASED ON	REMARKS
PIU-3-1	590	150	8	30	0.3	355	0.3	1/3	120	1	4.0	208	3	TRANE VPEF	(1)(2)(3)(4)
PIU-3-2	1190	240	12	30	0.3	715	0.3	1/3	120	1	7.0	208	3	TRANE VPEF	(1)(2)(3)(4)
PIU-3-3	1220	575	12	30	0.3	735	0.3	1/3	120	1	11.0	208	3	TRANE VPEF	(1)(2)(3)(4)
PIU-3-4	1535	320	14	30	0.3	925	0.3	1/3	120	1	9.0	208	3	TRANE VPEF	(1)(2)(3)(4)
PIU-3-5	1490	320	14	30	0.3	895	0.3	1/3	120	1	9.0	208	3	TRANE VPEF	(1)(2)(3)(4)
PIU-3-6	1475	625	14	30	0.3	885	0.3	1/3	120	1	12.0	208	3	TRANE VPEF	(1)(2)(3)(4)
PIU-3-7	630	165	10	30	0.3	380	0.3	1/3	120	1	4.0	208	3	TRANE VPEF	(1)(2)(3)(4)
PIU-3-8	1285	240	12	30	0.3	775	0.3	1/3	120	1	8.0	208	3	TRANE VPEF	(1)(2)(3)(4)
PIU-3-9	965	165	10	30	0.3	580	0.3	1/3	120	1	6.0	208	3	TRANE VPEF	(1)(2)(3)(4)
PIU-3-10	720	165	10	30	0.3	435	0.3	1/3	120	1	5.0	208	3	TRANE VPEF	(1)(2)(3)(4)
PIU-3-11	260	110	6	30	0.3	160	0.3	1/8	120	1	3.0	208	1	TRANE VPEF	(1)(2)(3)(4)
PIU-6-1	1720	320	14	30	0.3	1035	0.3	1/3	120	1	10.0	208	3	TRANE VPEF	(1)(2)(3)(4)
PIU-6-2	1410	450	12	30	0.3	850	0.3	1/3	120	1	10.0	208	3	TRANE VPEF	(1)(2)(3)(4)
PIU-6-3	870	480	10	30	0.3	525	0.3	1/3	120	1	9.0	208	3	TRANE VPEF	(1)(2)(3)(4)
PIU-6-4	615	130	8	30	0.3	370	0.3	1/3	120	1	4.0	208	3	TRANE VPEF	(1)(2)(3)(4)
PIU-6-5	1200	660	12	30	0.3	720	0.3	1/3	120	1	12.0	208	3	TRANE VPEF	(1)(2)(3)(4)
PIU-6-6	1140	410	12	30	0.3	685	0.3	1/3	120	1	9.0	208	3	TRANE VPEF	(1)(2)(3)(4)
PIU-6-7	975	345	10	30	0.3	585	0.3	1/3	120	1	8.0	208	3	TRANE VPEF	(1)(2)(3)(4)
PIU-6-8	845	165	10	30	0.3	510	0.3	1/3	120	1	5.0	208	3	TRANE VPEF	(1)(2)(3)(4)
PIU-6-9	1350	240	12	30	0.3	810	0.3	1/3	120	1	8.0	208	3	TRANE VPEF	(1)(2)(3)(4)
PIU-6-10	2315	420	16	30	0.3	1390	0.3	1/2	120	1	13.0	208	3	TRANE VPEF	(1)(2)(3)(4)
PIU-6-11	985	240	12	30	0.3	595	0.3	1/3	120	1	6.0	208	3	TRANE VPEF	(1)(2)(3)(4)
PIU-6-12	330	70	6	30	0.3	200	0.3	1/8	120	1	2.0	208	1	TRANE VPEF	(1)(2)(3)(4)
PIU-6-13	1915	320	14	30	0.3	1150	0.3	1/3	120	1	11.0	208	3	TRANE VPEF	(1)(2)(3)(4)
PIU-6-14	1090	240	12	30	0.3	655	0.3	1/3	120	1	7.0	208	3	TRANE VPEF	(1)(2)(3)(4)

(1) SINGLE POINT ELECTRICAL CONNECTION
(2) MAX INLET IN VELOCITY AT 1800 FPM
(3) SCR HEATER CAPACITY CONTROLLER
(4) PSC FAN MOTOR

VARIABLE AIR VOLUME UNIT SCHEDULE

UNIT NUMBER	LOCATION	MAXIMUM CFM	MINIMUM CFM	INLET CONNECTION SIZE	MINIMUM INLET PRESSURE (IN. W.G.)	MAXIMUM NOISE CRITERIA	SELECTION BASED ON	REMARKS
VAV-6-1	FITNESS 113	420	100	6"ø	0.3	40	TRANE VCCF	(1)
VAV-6-2	KILN 115	1400	200	12"ø	0.3	40	TRANE VCCF	(1)
ZD-4-1	CHEF 161	150	20	8"ø	0.2	40	TRANE VADB	(1)

(1) SUPPLY CONTROL VOLTAGE FROM ASSOCIATED RTU OR NEARBY PIU.

ELECTRIC HEATER SCHEDULE

UNIT NUMBER	TYPE	ELECTRIC HEATING COIL KW	VOLTS	PHASE	SELECTION BASED ON	REMARKS
EWH-1	WALL	2	208	1	MARKEL 3000	(1) (3)
EWH-2	WALL	2	208	1	MARKEL 3000	(1) (3)
ECH-1	CEILING	4	208	1	MARKEL 3380	(1)(2)

(1) PROVIDE UNIT MANUFACTURER'S POWER DISCONNECT SWITCH & BUILT-IN TAMPER PROOF THERMOSTAT.
(2) PROVIDE T-BAR MOUNTING OPTION.
(3) PROVIDE RECESSED MOUNTING OPTION.

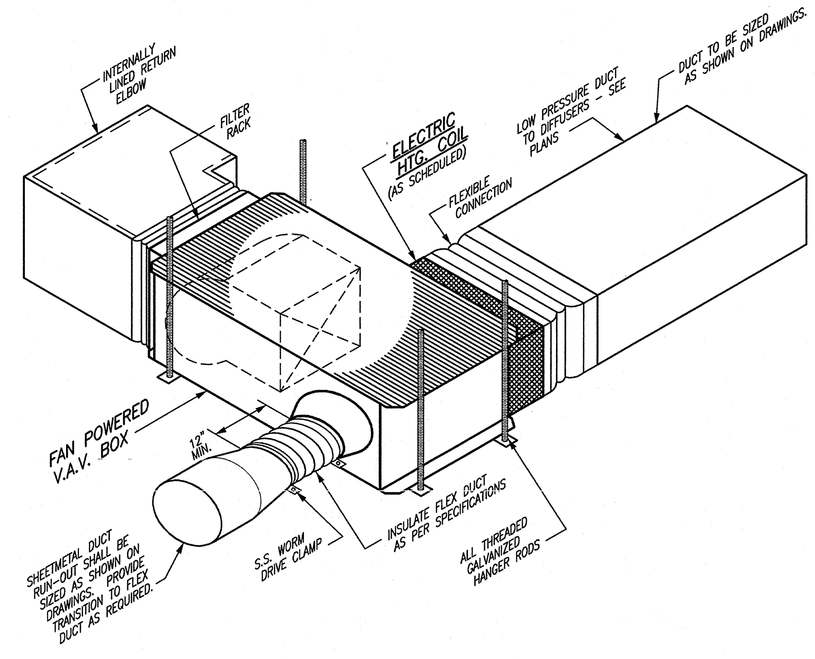

1 M-3 FAN POWERED VARIABLE AIR VOLUME BOX
NOT TO SCALE

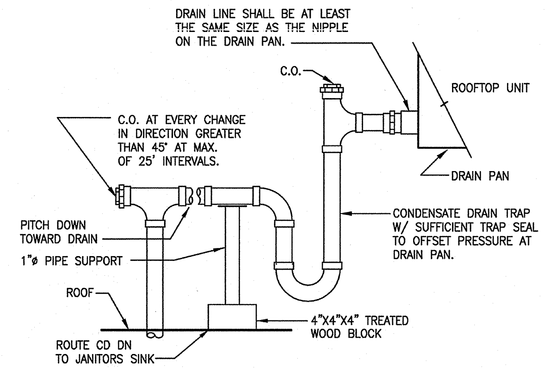

2 M-3 CONDENSATE DRAIN TRAP DETAIL
NOT TO SCALE

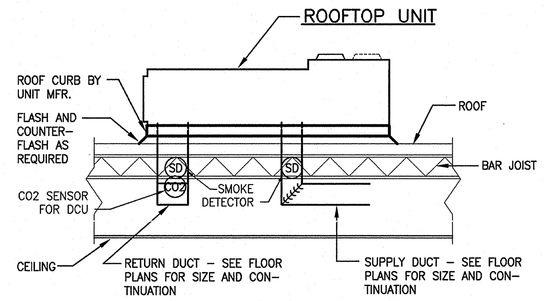

3 M-3 ROOFTOP UNIT DETAIL
NOT TO SCALE

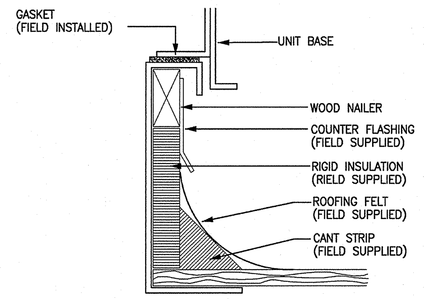

4 M-3 CURB SECTION
NOT TO SCALE

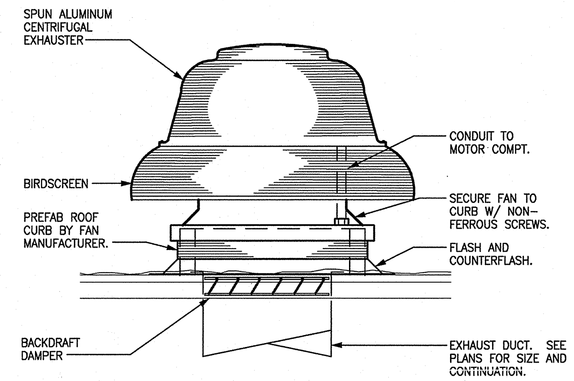

5 M-3 CENTRIFUGAL ROOF FAN
NOT TO SCALE

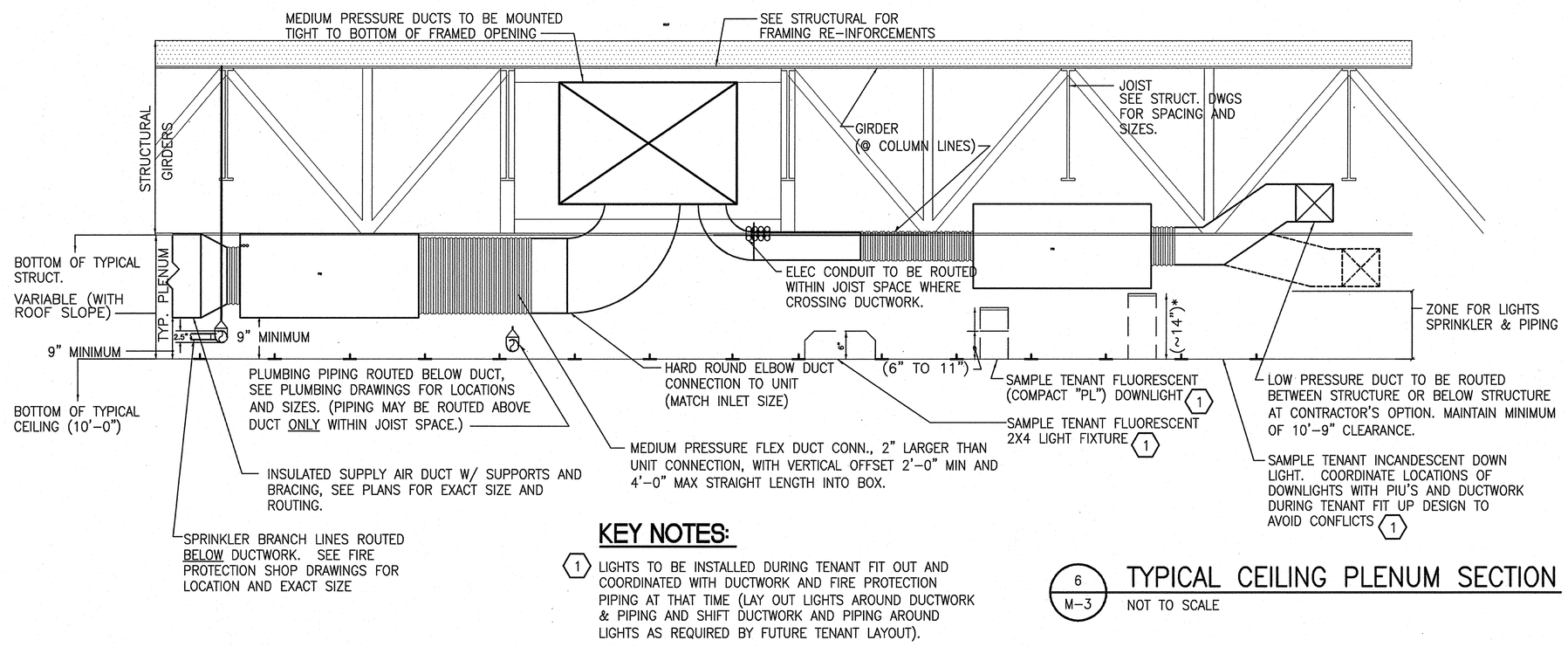

KEY NOTES:

(1) LIGHTS TO BE INSTALLED DURING TENANT FIT OUT AND COORDINATED WITH DUCTWORK AND FIRE PROTECTION PIPING AT THAT TIME (LAY OUT LIGHTS AROUND DUCTWORK & PIPING AND SHIFT DUCTWORK AND PIPING AROUND LIGHTS AS REQUIRED BY FUTURE TENANT LAYOUT).

6 M-3 TYPICAL CEILING PLENUM SECTION
NOT TO SCALE

HESM&A
CONSULTING ENGINEERS
ATLANTA - JACKSON - CHARLOTTE
1255 COLLIER ROAD
ATLANTA, GA 30318-2208
(404) 355-2200 - FAX (404) 355-0509
GEORGIA BOARD NO. - 959
ATL01112

© 2010 SIZEMORE GROUP

GEORGIA REGISTERED PROFESSIONAL ENGINEER MICHAEL B. CLIFFORD P.E. 12/13/10

Drawn: SM
Checked: CO
Date: 12/13/10
Job No.: 09121POWDER

Revisions:

No.	Date

POWDER SPRINGS STATION RENOVATION - SENIOR CENTER
1150 POWDER SPRINGS STREET - MARIETTA, GEORGIA 30060

THE DRAWING IS AN INSTRUMENT OF PROFESSIONAL SERVICE AND IS THE PROPERTY OF THE ARCHITECT AND MUST BE RETURNED UPON REQUEST. THE DESIGN SHOWN HEREIN IS NOT TO BE USED FOR ANY OTHER WORK EXCEPT BY WRITTEN AGREEMENT WITH THE ARCHITECT.

sizemoregroup

Title: MECHANICAL DETAILS AND SCHEDULES
Scale: NA
Sheet: M300
of:

PLUMBING FIXTURE SCHEDULE

ABBREV.	FIXTURE	DESCRIPTION	REMARKS	MINIMUM CONNECTION SIZE (INCHES) CW	HW	S	V
WC1	WATER CLOSET	KOHLER: "KINGSTON" NO. # K-4325	WALL MOUNTED, ELONGATED BOWL, WHITE VITREOUS CHINA	1	----	4	2
	ACCESSORIES	FLUSH VALVE: KOHLER K-10673	1.28 GPF FLUSHOMETER	----	----	----	----
	ACCESSORIES	SEAT: CHURCH NO. # 9500C	ELONGATED, WHITE, OPEN FRONT	----	----	----	----
WC2 (ADA)	WATER CLOSET	KOHLER: "KINGSTON" NO. # K-4325	WALL MOUNTED, ELONGATED BOWL, WHITE VITREOUS CHINA, ADA HEIGHT	1	----	4	2
	ACCESSORIES	FLUSH VALVE: KOHLER K-10673	1.28 GPF FLUSHOMETER	----	----	----	----
	ACCESSORIES	SEAT: CHURCH NO. # 9500C	ELONGATED, WHITE, OPEN FRONT	----	----	----	----
WC3 (ADA)	WATER CLOSET	KOHLER: "HIGHLINE" NO. # K-4405	FLOOR MOUNTED, ELONGATED BOWL, WHITE VITREOUS CHINA, ADA HEIGHT	1	----	4	2
	ACCESSORIES	FLUSH VALVE: KOHLER K-10673	1.28 GPF FLUSHOMETER	----	----	----	----
	ACCESSORIES	SEAT: CHURCH NO. # 9500C	ELONGATED, WHITE, OPEN FRONT	----	----	----	----
LV1	LAVATORY	KOHLER: "CAXTON" NO. # K-2210	3 BOWL W/ 0.5 GPM FAUCETS, SOAP DISPENSER, MIXING VALVE (SET 110°F MAX), COLOR BY ARCHITECT	1/2	1/2	1-1/4	2
LV2 (ADA)	LAVATORY	KOHLER: "KINGSTON" NO. # K-2005	WALL MOUNTED, WHITE VITREOUS CHINA	1/2	1/2	1-1/4	2
	ACCESSORIES	FAUCET: SYMMONS S-6080-G	4" CENTERSET, 0.5 GPM, CHROME FINISH, PRE-SET WATER DELIVERY TEMPERATURE TO 110°F MAX.	----	----	----	----
	ACCESSORIES	CHROME P-TRAP W/ CLEAN OUT PLUG AND GRID DRAIN	ALL PUBLIC LAVATORIES	----	----	----	----
	ACCESSORIES (ADA)	TRUEBRO UNDER SINK ADA PIPE COVERS	PROVIDE AS REQUIRED AT ALL ADA LAVATORIES	----	----	----	----
UR1	URINAL	KOHLER: NO. # K-4918	WATERLESS TYPE, WALL MOUNTED, REGULAR HEIGHT, WHITE VITREOUS CHINA	3/4	----	2	2
	ACCESSORIES	ZURN: NO. # ZGS-120 OZ SEALANT	1 GALLON REPLACEMENT SEALANT	----	----	----	----
UR2 (ADA)	URINAL (ADA)	KOHLER: NO. # K-4918	WATERLESS TYPE, WALL MOUNTED, ADA HEIGHT, WHITE VITREOUS CHINA	3/4	----	2	2
	ACCESSORIES	ZURN: NO. # ZGS-120 OZ SEALANT	1 GALLON REPLACEMENT SEALANT	----	----	----	----
SK1	SINK (ADA)	ELKAY: NO. # LRAD2522	UNDERSLUNG, 20 GA SINGLE BOWL	1/2	1/2	1-1/4	2
	ACCESSORIES	FAUCET: ELKAY: NO. # K-8762	ADA COMPLIANT HIGH ARC FAUCET WITH BLADE HANDLES	----	----	----	----
	ACCESSORIES	DRAIN: ELKAY: NO. # LK-18	GRID WASTE	----	----	----	----
	ACCESSORIES	LAV GUARD: TRUEBRO UNDERSINK PIPE COVERS	ALL ADA SINKS	----	----	----	----
MS	MOP SINK	BASIN: FIAT NO.# TSCB-1610	FLOOR MOUNTED, TERAZZO, CORNER INSTALLATION	1/2	1/2	3	2
	ACCESSORIES	FAUCET: FIAT NO. # MSB-3624	SERVICE FAUCET	----	----	----	----
	ACCESSORIES	HOSE AND BRACKET: FIAT NO. # 832-AA	30" LONG FLEXIBLE HOSE	----	----	----	----
	ACCESSORIES	MOP HANGER: FIAT NO. # 889-CC	STAINLESS STEEL MOP HANGER	----	----	----	----
	ACCESSORIES	WALL GUARD: FIAT NO. # MSG-2424	STAINLESS STEEL WALL GUARD	----	----	----	----
SH1	SHOWER (ADA)	ENCLOSURE: TILE BY ARCHITECT	---	----	----	----	----
	ACCESSORIES	SHOWER SYSTEM: SYMMONS: BP-56-500-B30-V	TEMPTOL II SHOWER WITH HAND SPRAY, HOSE, ADJUSTING BAR, SHOWER HEAD AND MIXING VALVE	1/2	1/2	----	----
	ACCESSORIES	DRAIN: JR SMITH NO. # 2005	6"x6" SQUARE NICKLE BROZE TOP FOR USE IN TOILET/ KITCHEN, PROVIDE TRAP PRIMER WHERE INDICATED	----	----	2	2
FD"G"	FLOOR DRAIN "GENERAL"	DRAIN: JR SMITH NO. # 2005	6"x6" SQUARE NICKLE BROZE TOP FOR USE IN TOILET/ KITCHEN, PROVIDE TRAP PRIMER WHERE INDICATED	1/2	----	3	2
FS	FLOOR SINK	DRAIN: JR SMITH NO. # 3040	8-1/2"ROUND WITH 1/2 GRATE	1/2	----	3	2
FD"M"	FLOOR DRAIN "MECHANICAL"	FIXTURE: JR SMITH NO. # 2240	12"MEDIUM RND TOP, CAST IRON , W/TRAP PRIMER AND SEDIMENT BUCKET	1/2	----	3	2
EWC	DRINKING FOUNTAIN	FIXTURE: HALSEY TAYLOR HTVBBL-Q	BI-LEVEL FOUNTAIN, STANDARD HEIGHT	1/2	----	1-1/4	2

WATER HEATER SCHEDULE

MARK	MAKE	MODEL	MIN. STORAGE CAPACITY(GAL.)	MIN. RECOVERY (G.P.H.)	DISCHARGE TEMP. °F	TEMP. RISE °F	ELECTRICAL HP	KW	VOLTS	PHASE	TYPE GAS	BTUH INPUT	FLUE SIZE	REMARKS
WH1	A.O. SMITH	BTH 199	100	256	140°	90°	--	--	---	---	NATURAL	199,900	3"Ø	
WH2	A.O. SMITH	BTH 199	100	256	140°	90°	--	--	---	---	NATURAL	199,900	3"Ø	

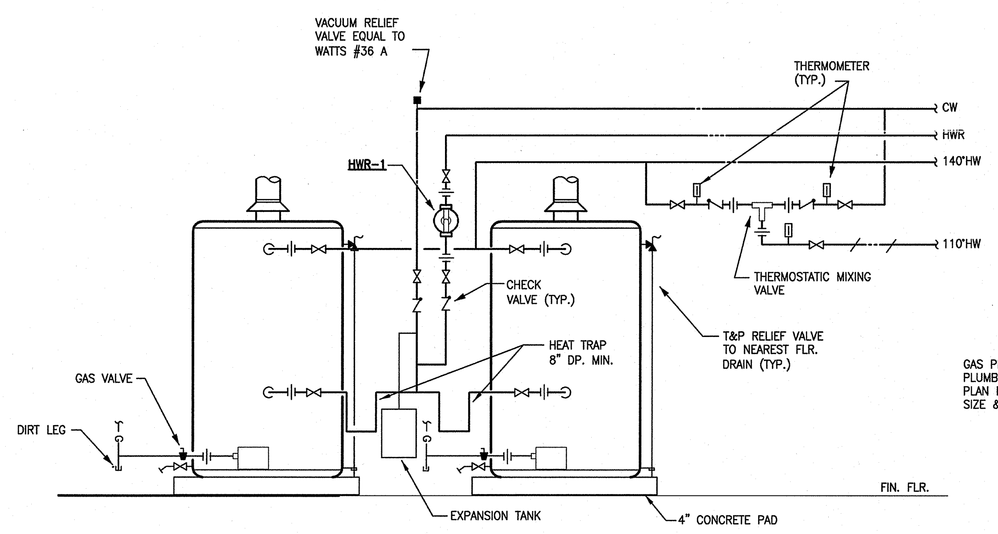

1 P100 WATER HEATER DETAIL
NO SCALE

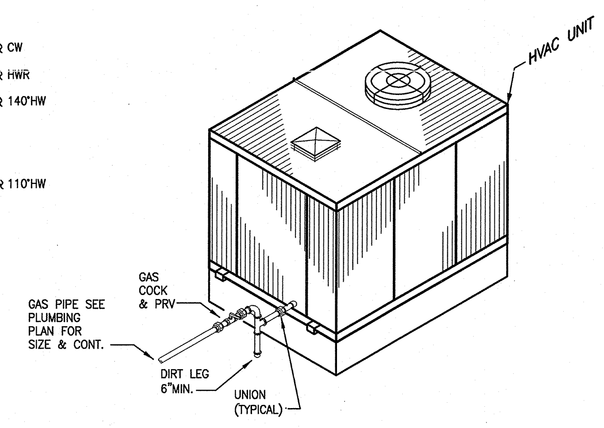

2 P100 GAS PIPING CONNECTION DETAIL
NOT TO SCALE

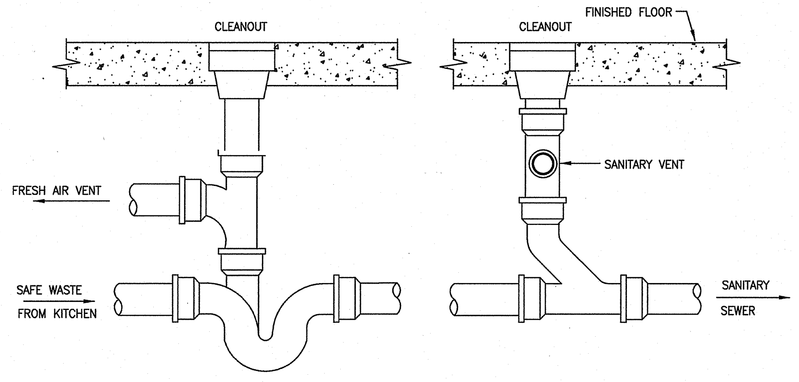

3 P100 SAFE WASTE MASTER TRAP DETAIL
NO SCALE

PLUMBING GENERAL NOTES:

1. COORDINATE ALL WORK WITH ARCHITECTURAL, STRUCTURAL, MECHANICAL, AND ELECTRICAL TRADES. PIPE ROUTING SHOWN IS DIAGRAMMATIC, PROVIDE ALL OFFSETS, ETC., TO AVOID INTERFERENCES WITH EQUIPMENT, PIPING, DUCTWORK, LIGHTS, CONDUIT, ETC..
2. COORDINATE ALL FLOOR PENETRATIONS WITH STRUCTURAL DRAWINGS. SET SLEEVES IN FLOORS AND WALLS AND ATTACHMENTS FOR HANGERS AS CONSTRUCTION PROGRESSES. ALL PENETRATIONS MUST BE SEALED AND HELD AS TIGHT TO COLUMNS OR WALLS AS POSSIBLE.
3. ALL PIPING SHALL BE CONCEALED INSIDE WALLS, BELOW FLOORS OR ABOVE CEILINGS UNLESS INDICATED OTHERWISE.
4. ALL PIPING SHALL BE SLOPED AS PER AT THE MINIMUM GRADE REQUIRED BY CODE (UNLESS NOTED OTHERWISE) FOR EACH PARTICULAR PIPE SIZE.
5. SEE ELECTRICAL DRAWINGS FOR ELECTRICAL INFORMATION AND COORDINATION.
6. COORDINATE PIPING WITH BEAMS AND STRUCTURAL MEMBERS / COMPONENTS.
7. REFER TO ARCHITECTURAL DRAWINGS FOR EXACT LOCATION OF ALL PLUMBING FIXTURES. EXACT LOCATION OF ALL FIXTURES MUST BE VERIFIED IN THE FIELD PRIOR TO INSTALLATION. FINAL LOCATION SHALL BE AS DIRECTED BY ARCHITECT.
8. DO NOT RUN PLUMBING PIPING THROUGH ELECTRICAL ROOMS, DIRECTLY ABOVE ELECTRICAL PANELS OR THROUGH OTHER WATER SENSITVE AREAS.
9. ALL FIXTURES SHALL BE FURNISHED WITH STOP VALVES. VALVES MAY BE IN SUPPLY PIPES OR INTREGAL WITH SUPPLY FITTINGS.
10. PLUMBING CONTRACTOR SHALL OBTAIN ALL NECESSARY PERMITS AND PAY ALL COSTS INVOLVED.
11. INSULATE SUPPLY PIPES, STOPS AND DRAIN AT EACH ADA SINK OR ADA LAVATORY WITH FIRE RESISTANT MOLDED FOAM INSULATING DEVICE TYPICAL TO TRUEBRO LAV GUARD
12. MINIMUM FIXTURE CONNECTION SIZES SHALL BE MADE IN ACCORDANCE WITH THE PLUMBING FIXTURE SCHEDULE.
13. ALL EQUIPMENT, PIPING, APPURTENANCES SHALL BE PROTECTED FROM DEBRIS AND DAMAGE. SENSITIVE EQUIPMENT SHALL NOT BE DELIVERED TO THE JOB SITE UNTIL SUCH TIME AS IT IS TO BE INSTALLED. PIPING ENDS SHALL BE CLOSED BY TEMPORARY MEANS WHEN PORTIONS OF THE SYSTEM ARE NOT COMPLETE.
14. LOCATE ALL VALVES WHERE THEY ARE ACCESSIBLE FOR SERVICE AND USE. WHERE ACCESS PANELS ARE REQUIRED COORDINATE SELECTION AND LOCATION WITH ARCHITECT.
15. PROVIDE TRAP PRIMER AND CONNECTION FOR ANY FLOOR DRAIN, FLOOR SINK OR HUB DRAIN NOT SUBJECT TO REGULAR FLOW.
16. ALL PIPES DROPPING AT COLUMNS SHALL BE INSTALLED WITHIN THE ENCLOSURE DETAILED ON THE ARCHITECTURAL DRAWINGS SUCH THAT THE DIMENSIONS OF THE ENCLOSURE ARE NOT ALTERED.
17. INSULATE ALL NEW HOT AND COLD WATER PIPING. SEE SPECIFICATIONS FOR INSULATION SIZES.
18. ALL PENETRATIONS AT FLOORS AND RATED PARTIONS SHALL HAVE A UL CLASSIFIED FIRE STOP SYSTEM TESTED TO ASTM E814 AND UL 1479 BY UNDERWRITERS LABORATORIES. FIRE STOP SYSTEMS SHALL BE PROSET SYSTEMS, PENSIL FIRESTOP SYSTEMS OR 3M COMPANY.
19. THE CONTRACTOR SHALL CONTACT THE COUNTY FOR SPECIFIC FIRE PROTECTION SUBMITTAL REQUIREMENTS.

LEGEND

SYMBOL	DESCRIPTION
	WASTE (SOIL PIPE)
	VENT
	COLD WATER
	HOT WATER
	HOT WATER CIRC./RETURN
	TRAP
	RISER DOWN (ELBOW)
	RISER UP (ELBOW)
	RISE OR DROP
	BRANCH – BOTTOM CONNECTION
	BRANCH – TOP CONNECTION
	BRANCH – SIDE CONNECTION
	CLEANOUT
	POINT OF CONN. BETWEEN NEW & EXIST.
	VALVE

ABBREVIATIONS

ABBR.	DESCRIPTION
A/C	ABOVE CEILING
AFF	ABOVE FINISHED FLOOR
AFG	ABOVE FINISHED GRADE
B/F	BELOW FLOOR
℄	CENTER LINE
CO	CLEANOUT
CLG	CEILING
CW	COLD WATER
DN	DOWN
GV	GATE VALVE
HW	HOT WATER
O/H	OVERHEAD
S	SOIL STACK
SAN	SANITARY
V	VENT

HESM&A
CONSULTING ENGINEERS
ATLANTA - JACKSON - CHARLOTTE
125 COLLIER ROAD
ATLANTA, GA. 30318-2208
(404) 352-2000 - FAX (404) 351-0509
GEORGIA BOARD 245 - 959
ATG112

© 2010 SIZEMORE GROUP

DANIEL B. GLIFORD GEORGIA REGISTERED ENGINEER

Drawn: RLB
Checked: DBC
Date: 12/13/10
Job No.: 09121POWDER

Revisions:

No.	Date

POWDER SPRINGS STATION RENOVATION – SENIOR CENTER
1150 POWDER SPRINGS STREET – MARIETTA, GEORGIA 30060

THE DRAWINGS AND SPECIFICATIONS AS INSTRUMENTS OF SERVICE ARE THE PROPERTY OF THE ARCHITECT AND ARE TO BE RETURNED UPON REQUEST. THEY SHALL NOT BE USED FOR OTHER WORK OR BY OTHERS EXCEPT WITH THE WRITTEN PERMISSION OF THE ARCHITECT.

sizemoregroup

Title: PLUMBING GENERAL INFORMATION
Scale: NO SCALE
Sheet: P100
of:

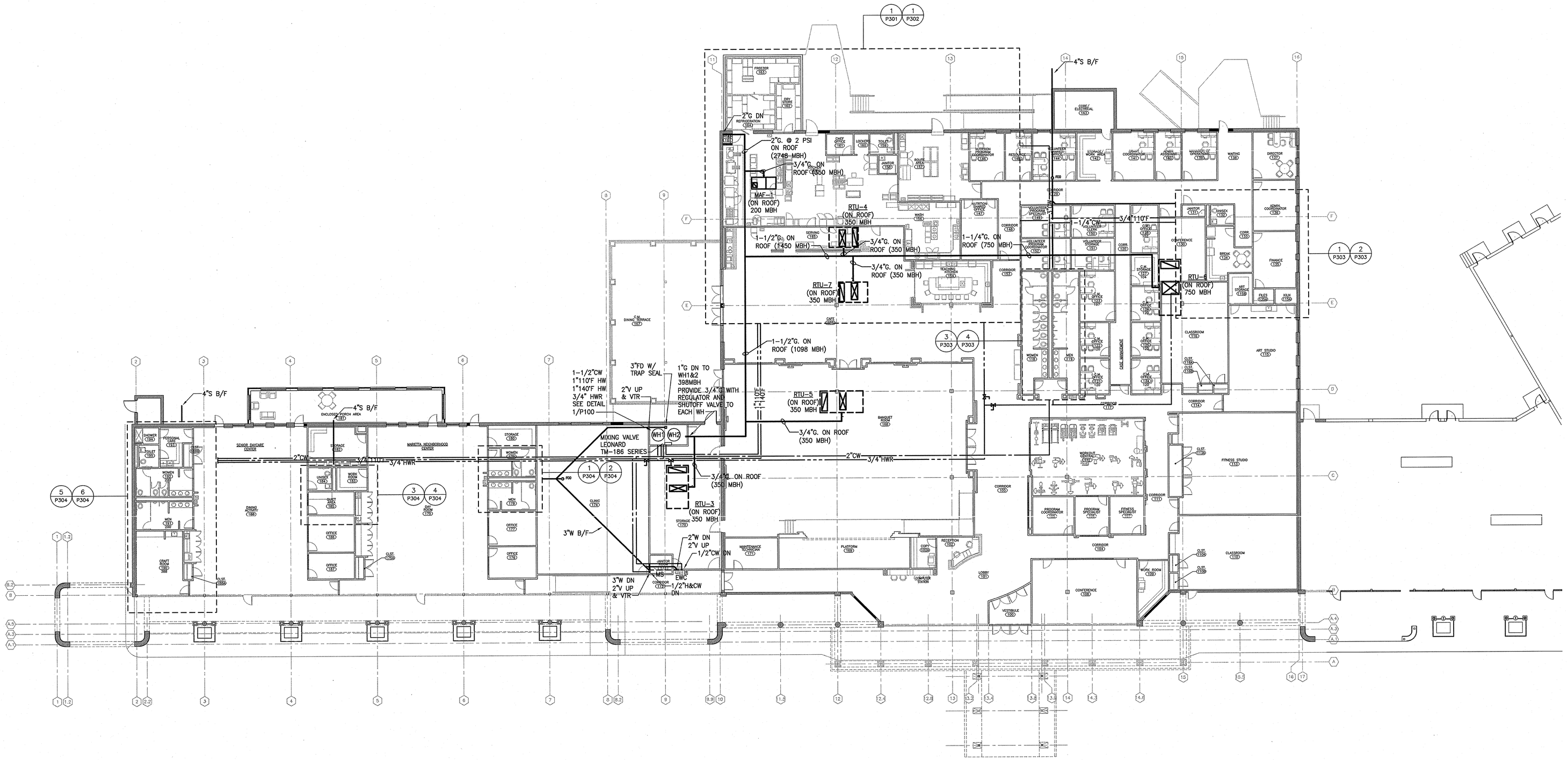

1 P201 PLUMBING FLOOR PLAN
SCALE: 1/16"=1'-0"

© 2010
SIZEMORE GROUP

Drawn: RLB
Checked: DBC
Date: 12/13/10
Job No.: 09121POWDER

Revisions:

No.	Date

POWDER SPRINGS STATION RENOVATION – SENIOR CENTER
1150 POWDER SPRINGS STREET – MARIETTA, GEORGIA 30060

THE DRAWINGS AS INSTRUMENTS OF SERVICE ARE THE PROPERTY OF THE ARCHITECT AND SHALL NOT BE USED BY ANY PERSON FOR ANY PURPOSE NOT SPECIFICALLY AGREED TO IN WRITING BY THE ARCHITECT. THE ARCHITECT SHALL RETAIN ALL COMMON LAW, STATUTORY AND OTHER RIGHTS, INCLUDING COPYRIGHTS, IN THE DRAWINGS.

sizemoregroup

Title:
PLUMBING FLOOR PLAN

Scale:
AS NOTED

Sheet:
P201

of:

HESM&A
CONSULTING ENGINEERS
ATLANTA - JACKSON - CHARLOTTE
1255 COLLIER ROAD
ATLANTA, GA 30318-2308
(404) 352-5300 - FAX (404) 355-0969
GEORGIA BOARD NO. - 939

ATL01L12

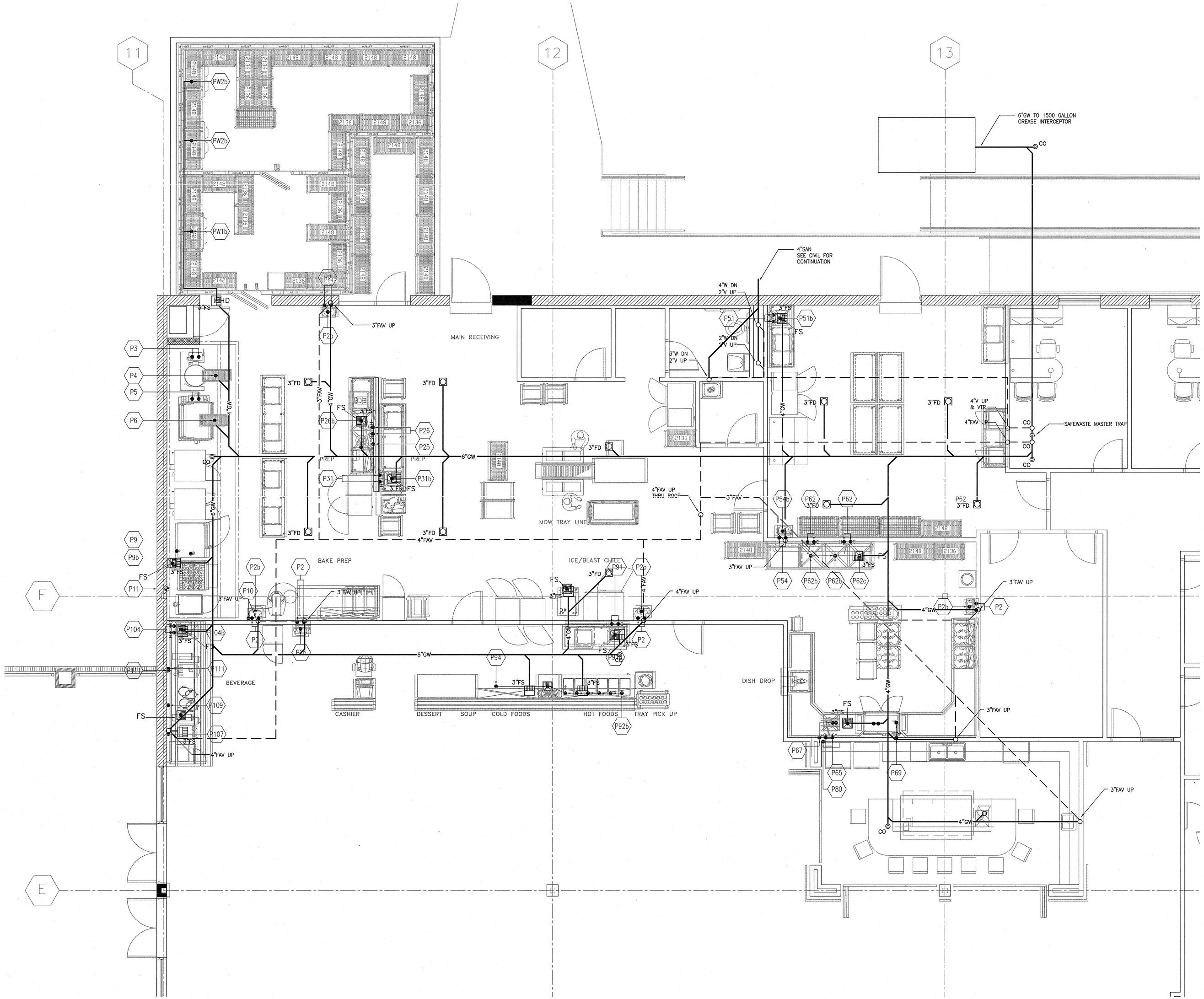

1 P301 KITCHEN PARTIAL PLAN – SANITARY
SCALE: 1/4"=1'-0"

© 2010 SIZEMORE GROUP

REGISTERED PROFESSIONAL ENGINEER GEORGIA DANIEL B. LITTLEFIELD, P.E.

Drawn: RLB
Checked: DBC
Date: 12/13/10
Job No.: 09121POWDER

Revisions:

No.	Date

POWDER SPRINGS STATION RENOVATION – SENIOR CENTER
1150 POWDER SPRINGS STREET – MARIETTA, GEORGIA 30060

THE DRAWING IS AN INSTRUMENT OF SERVICE AND IS THE PROPERTY OF THE ARCHITECT. ALL REPRODUCTIONS, IN WHOLE OR IN PART, MUST BEAR THE ARCHITECT'S COPYRIGHT NOTICE. THE DRAWING MAY NOT BE USED ON OTHER PROJECTS, EXCEPT BY AGREEMENT WITH THE ARCHITECT.

sizemoregroup

Title: PLUMBING KITCHEN PART PLAN – SANITARY

Scale: AS NOTED

Sheet: P301

of:

HESM&A
CONSULTING ENGINEERS
ATLANTA - JACKSON - CHARLOTTE
125 COLLIER ROAD
ATLANTA, GA. 30309-2008
(404) 352-3202 - FAX (404) 352-0809
GEORGIA BOARD NO. - 939
ATL0118

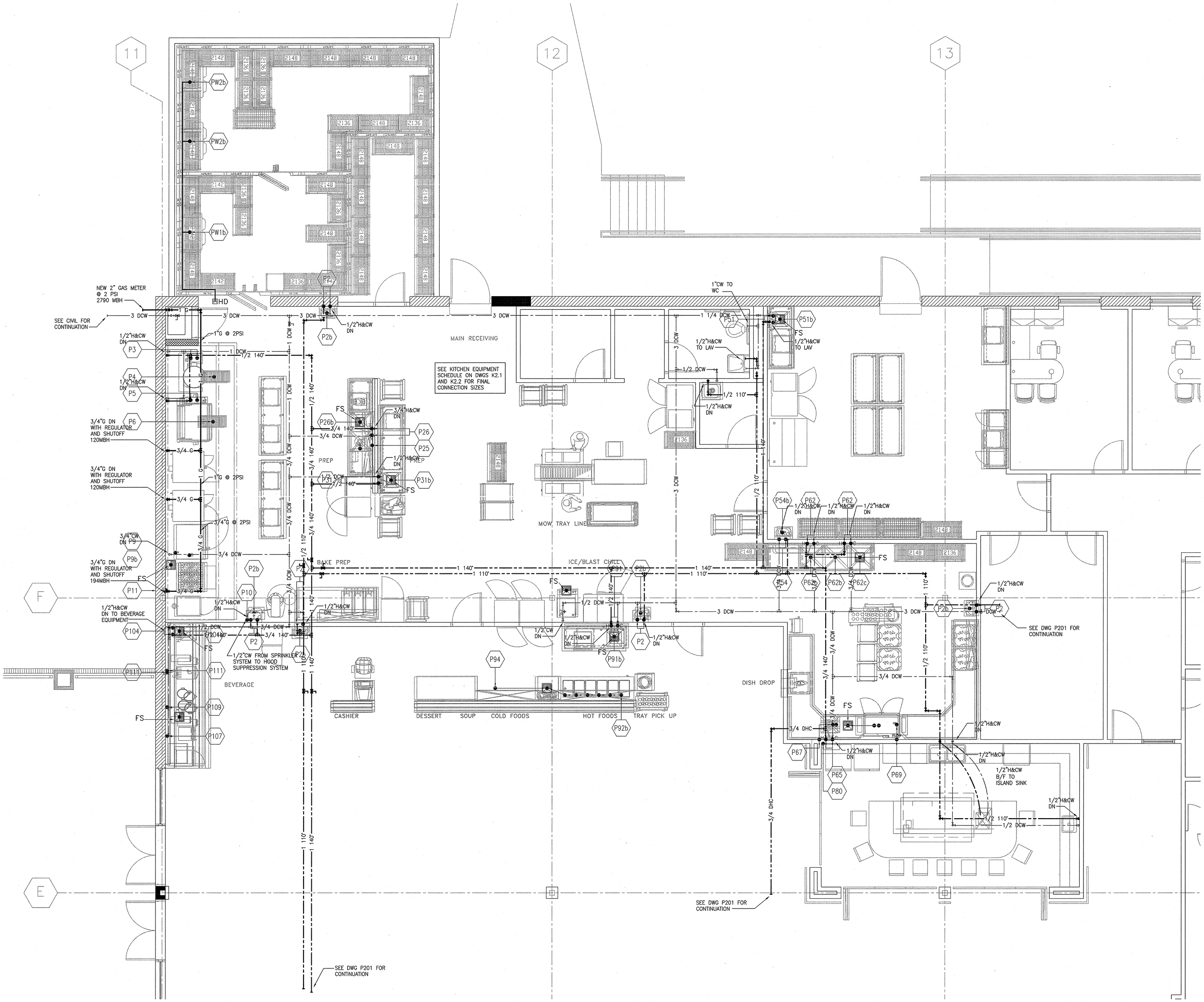

1 P302 KITCHEN PARTIAL PLAN – SUPPLY
SCALE: 1/4"=1'-0"

© 2010 SIZEMORE GROUP

GEORGIA REGISTERED PROFESSIONAL ENGINEER DANIEL B. CLIFFORD P.E.

Drawn: RLB
Checked: DBC
Date: 12/13/10
Job No.: 09121POWDER

Revisions:

No.	Date

POWDER SPRINGS STATION RENOVATION – SENIOR CENTER
1150 POWDER SPRINGS STREET – MARIETTA, GEORGIA 30060

THE DRAWINGS AND SPECIFICATIONS AS INSTRUMENTS OF SERVICE ARE AND SHALL REMAIN THE PROPERTY OF THE ARCHITECT WHO PREPARED THEM. THEY ARE TO BE USED ONLY FOR THIS PROJECT AND NOT TO BE LOANED OR COPIED IN WHOLE OR IN PART WITHOUT THE WRITTEN PERMISSION OF THE ARCHITECT.

sizemoregroup

Title: PLUMBING KITCHEN PART PLAN – SUPPLY

Scale: AS NOTED

Sheet: P302

of:

HESM&A
CONSULTING ENGINEERS
ATLANTA - JACKSON - CHARLOTTE
1255 COLLIER ROAD
ATLANTA, GA 30318-2268
(404) 352-5200 - FAX (404) 352-0909
GEORGIA BOARD NO. - 339
ATL0112

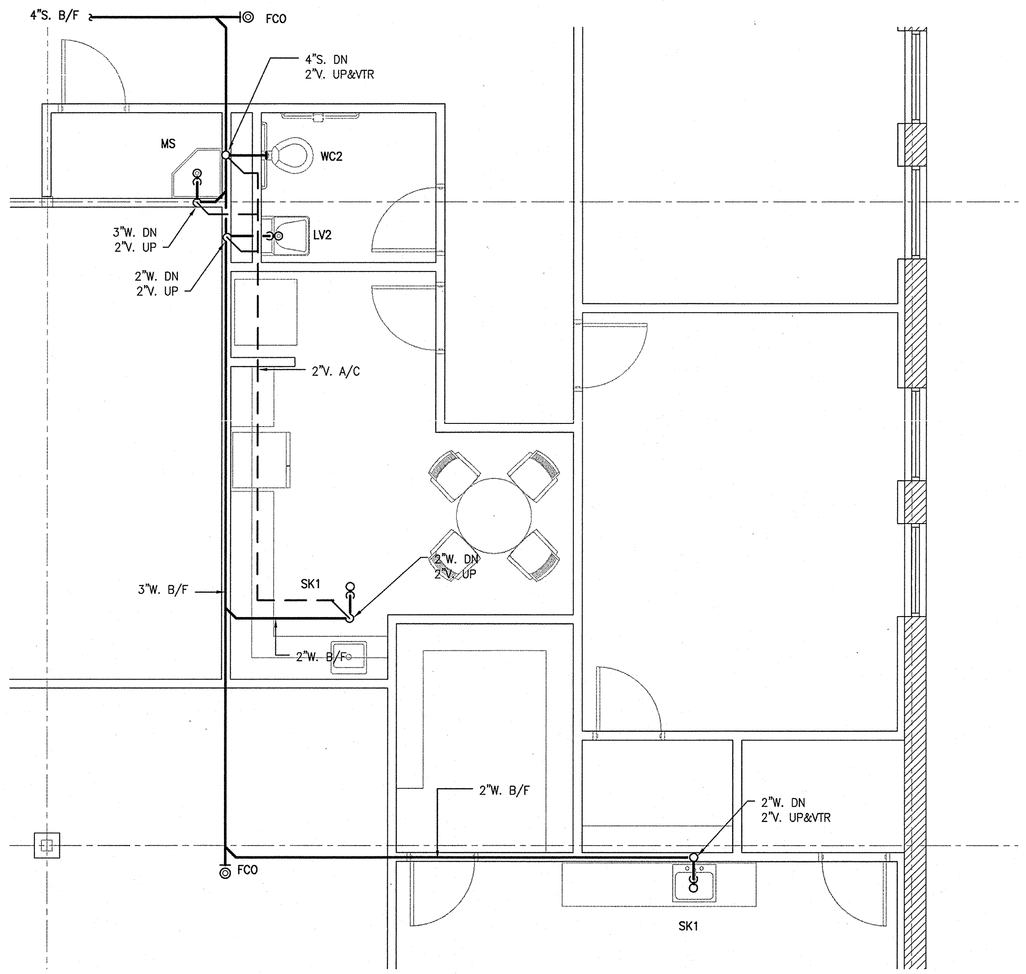

1 / P303 XXX PARTIAL PLAN – SANITARY
SCALE: 1/4"=1'-0"

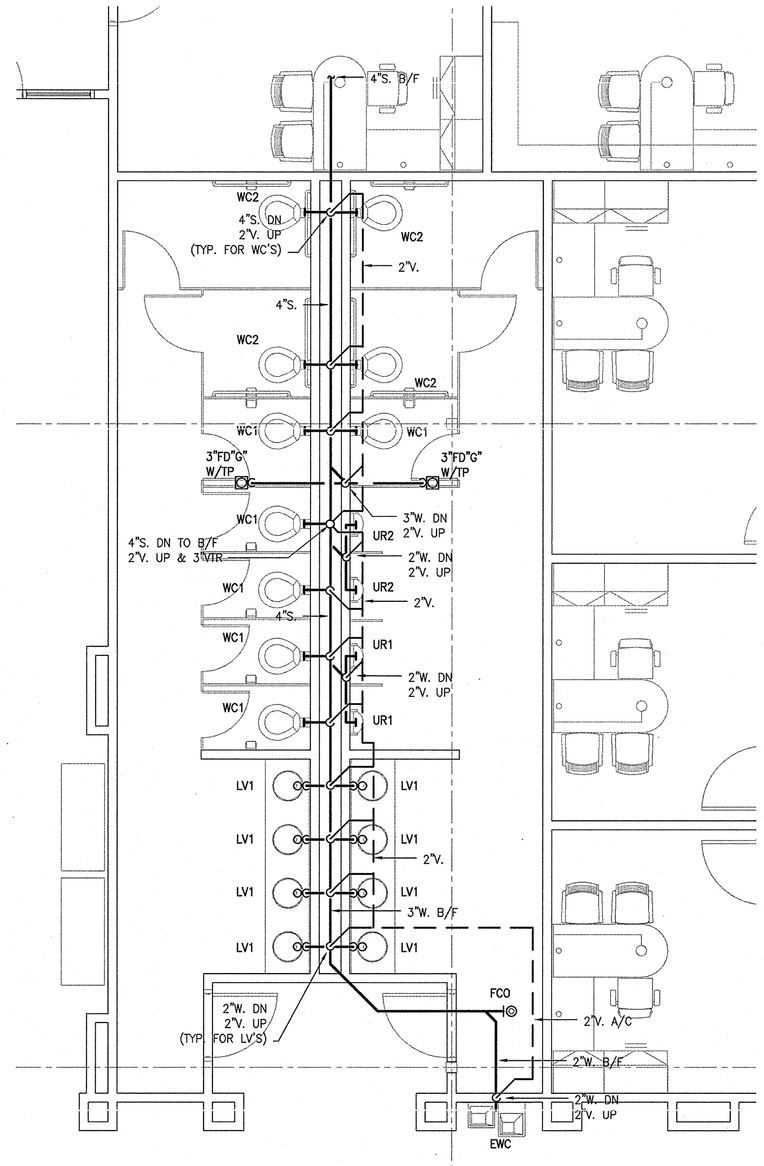

3 / P303 XXX PARTIAL PLAN – SANITARY
SCALE: 1/4"=1'-0"

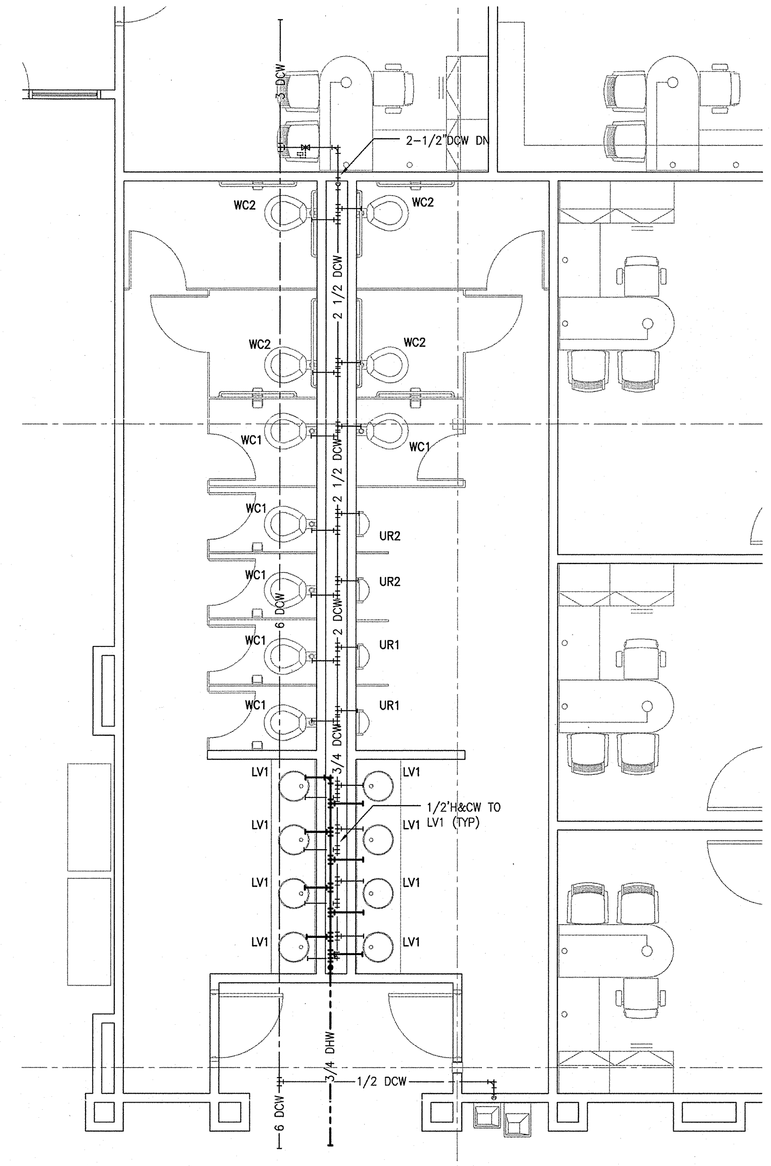

4 / P303 XXX PARTIAL PLAN – SUPPLY
SCALE: 1/4"=1'-0"

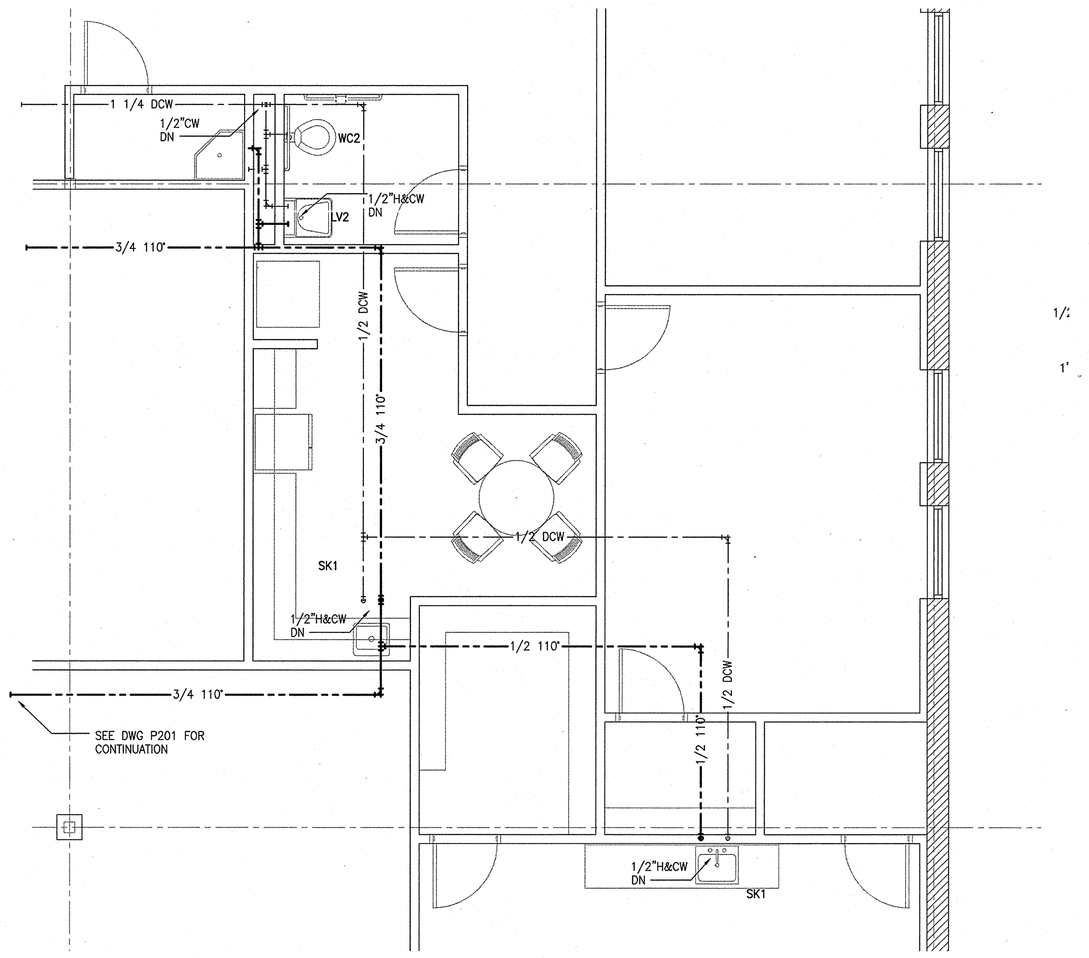

2 / P303 XXX PARTIAL PLAN – SUPPLY
SCALE: 1/4"=1'-0"

© 2010
SIZEMORE GROUP

GEORGIA
DANIEL B. CLIFFORD, P.E.
DBC
PROFESSIONAL ENGINEER
EXPIRES

Drawn: RLB
Checked: DBC
Date: 12/13/10
Job No.: 09121POWDER

Revisions:

No.	Date

POWDER SPRINGS STATION RENOVATION – SENIOR CENTER
1150 POWDER SPRINGS STREET – MARIETTA, GEORGIA 30060

THE DRAWINGS AS AN INSTRUMENT OF SERVICE IS THE PROPERTY OF THE ARCHITECT AND SHALL NOT BE USED FOR ANY PURPOSE NOT SPECIFICALLY AGREED TO IN WRITING BY THE ARCHITECT. ALL REPRODUCTIONS OF THE DRAWINGS, SPECIFICATIONS OR OTHER DOCUMENTS MUST BEAR THE STATUTORY COPYRIGHT NOTICE OF THE ARCHITECT.

sizemoregroup

Title:
PLUMBING PARTIAL PLANS

Scale:
AS NOTED

Sheet:
P303

of:

HESM&A
CONSULTING ENGINEERS
ATLANTA - JACKSON - CHARLOTTE
125 COLLIER ROAD
ATLANTA, GA 30309-2205
(404) 351-5300 - FAX (404) 351-0919
GEORGIA BOARD NO. - 559
ATG112

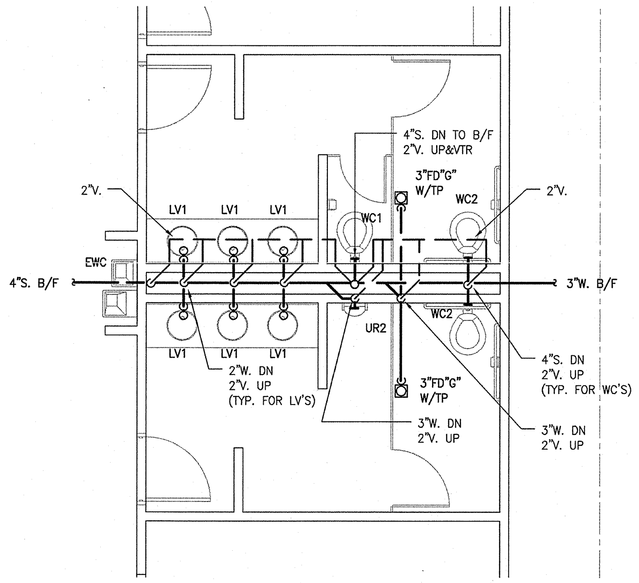

1 / P304 178/179 PARTIAL PLAN – SANITARY
SCALE: 1/4"=1'-0"

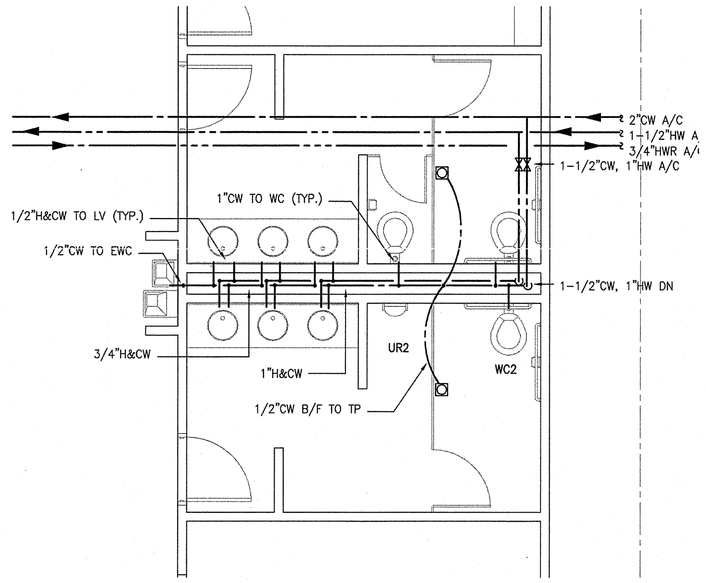

2 / P304 178/179 PARTIAL PLAN – SUPPLY
SCALE: 1/4"=1'-0"

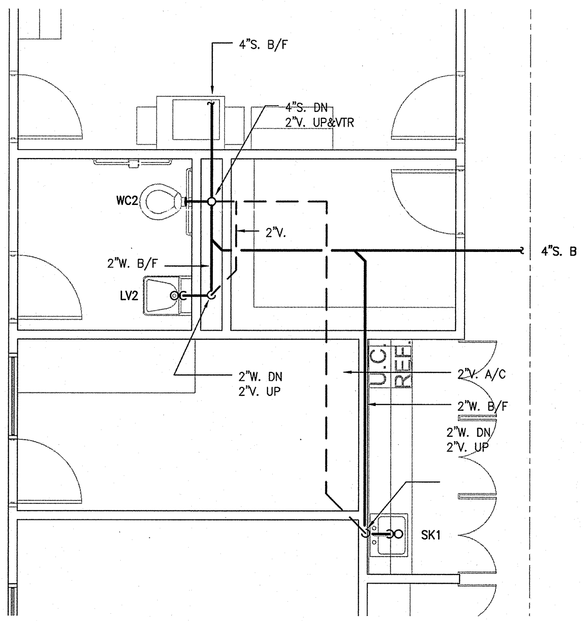

3 / P304 184 PARTIAL PLAN – SANITARY
SCALE: 1/4"=1'-0"

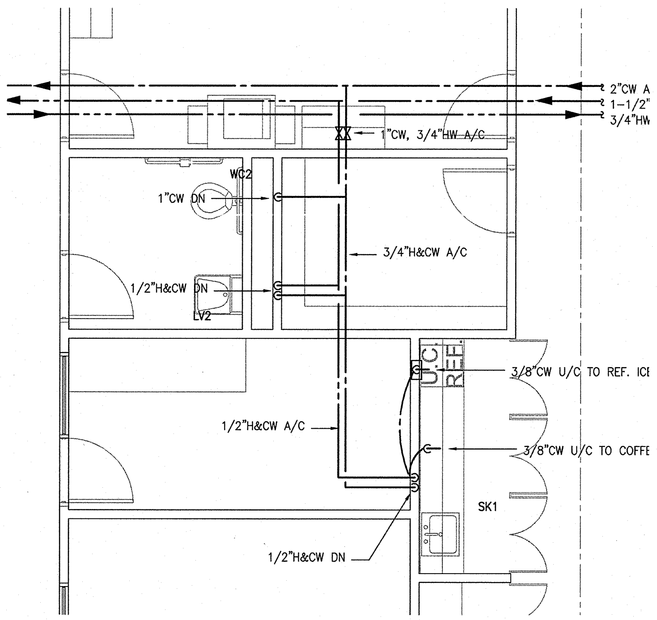

4 / P304 184 PARTIAL PLAN – SUPPLY
SCALE: 1/4"=1'-0"

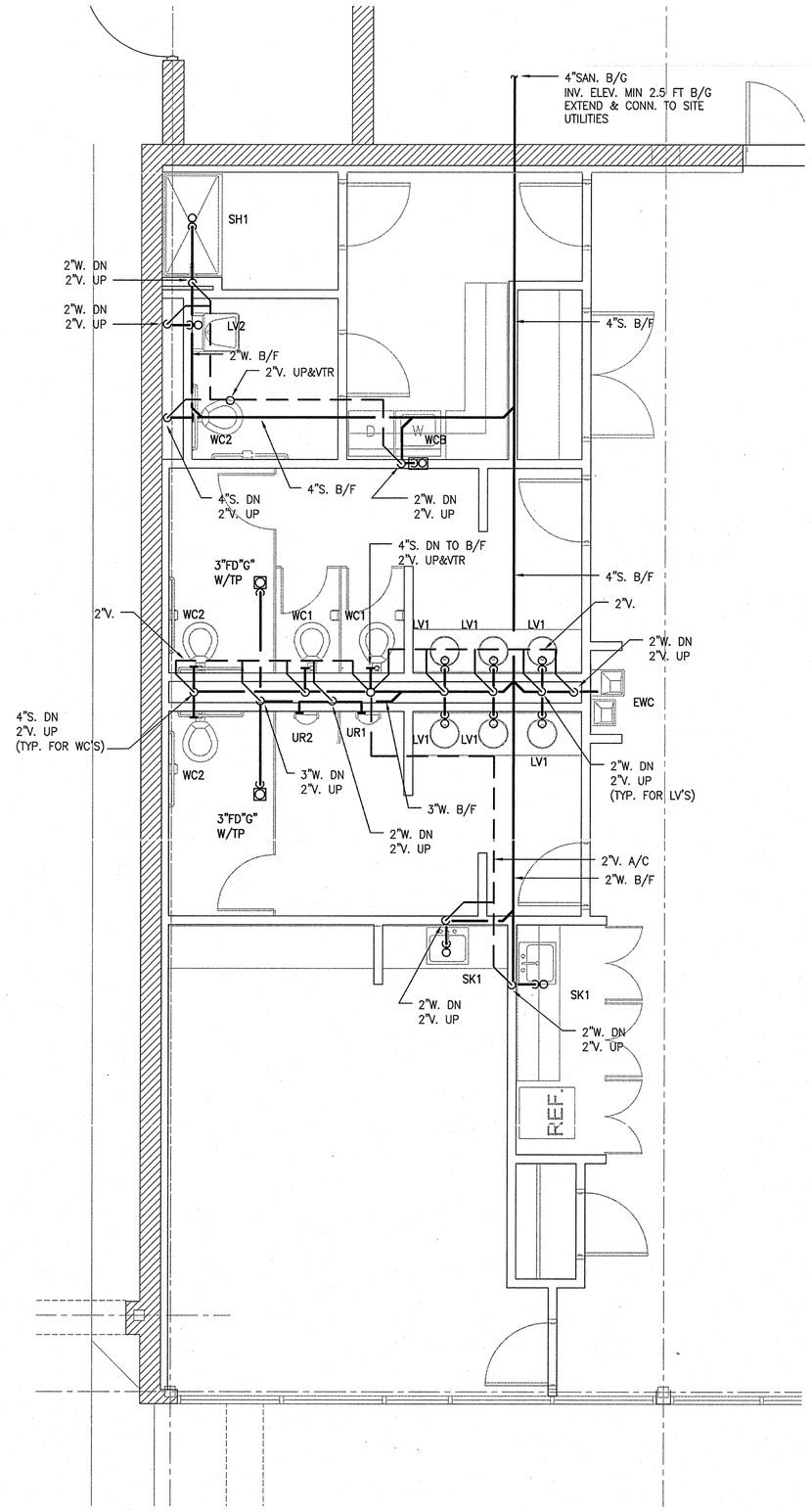

5 / P304 191/192 PARTIAL PLAN – SANITARY
SCALE: 1/4"=1'-0"

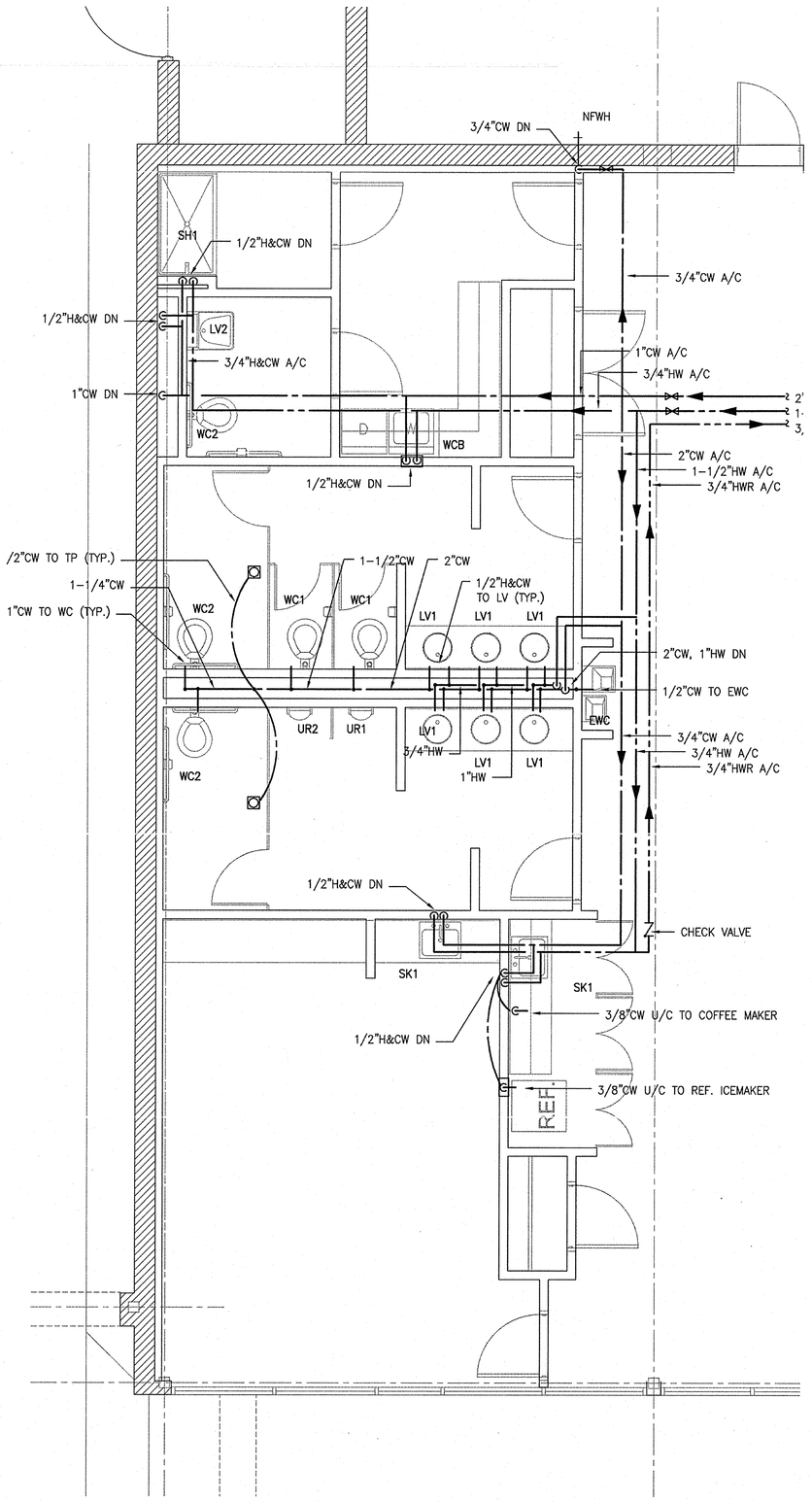

6 / P304 191/192 PARTIAL PLAN – SUPPLY
SCALE: 1/4"=1'-0"

© 2010
SIZEMORE GROUP

DANIEL B. CLIFFORD, P.E.
PROFESSIONAL ENGINEER
GEORGIA
No. 17244
12/13/10

Drawn: RLB
Checked: DBC
Date: 12/13/10
Job No.: 09121POWDER

Revisions:

No.	Date

POWDER SPRINGS STATION RENOVATION – SENIOR CENTER
1150 POWDER SPRINGS STREET – MARIETTA, GEORGIA 30060

THESE DRAWINGS ARE AN INSTRUMENT OF PROFESSIONAL SERVICE AND ARE THE PROPERTY OF THE ARCHITECT. THEY SHALL NOT BE USED FOR ANY PURPOSE OTHER THAN THE PROJECT SHOWN HEREIN WITHOUT THE WRITTEN PERMISSION OF THE ARCHITECT.

sizemoregroup

Title: PLUMBING PARTIAL PLANS
Scale: AS NOTED
Sheet: P304
of:

HESM&A
CONSULTING ENGINEERS
ATLANTA - JACKSON - CHARLOTTE
1255 COLLIER ROAD
ATLANTA, GA. 30318-3308
(404) 352-3203 - FAX (404) 352-0509
GEORGIA BOARD NO. - 959
ATL01LE

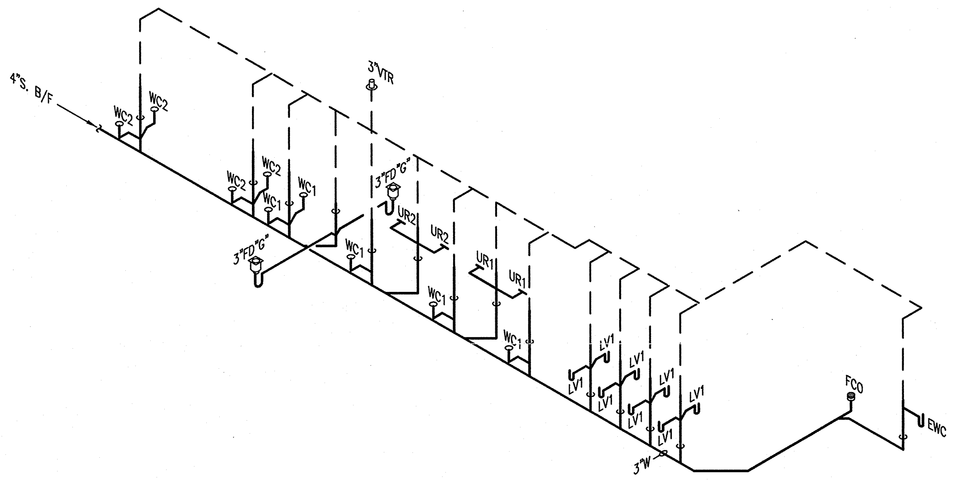

1 P305 MEN 119 & WOMEN 118 RISER DIAGRAM
NOT TO SCALE

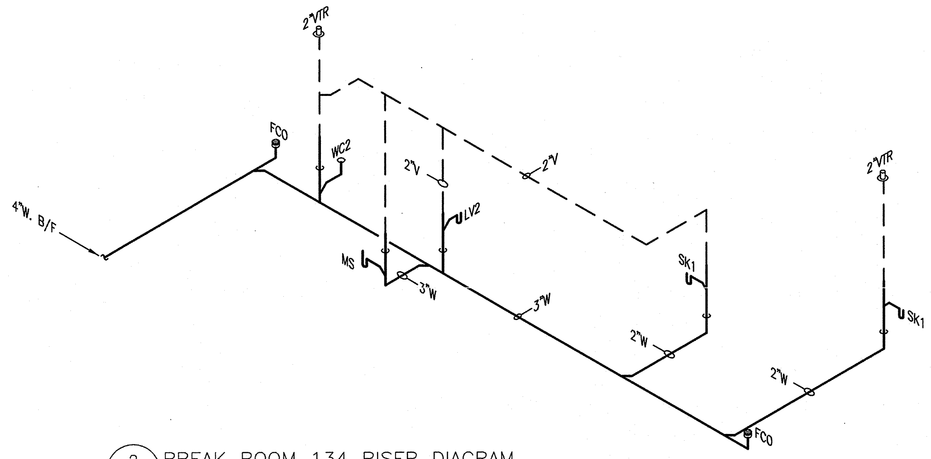

2 P305 BREAK ROOM 134 RISER DIAGRAM
NOT TO SCALE

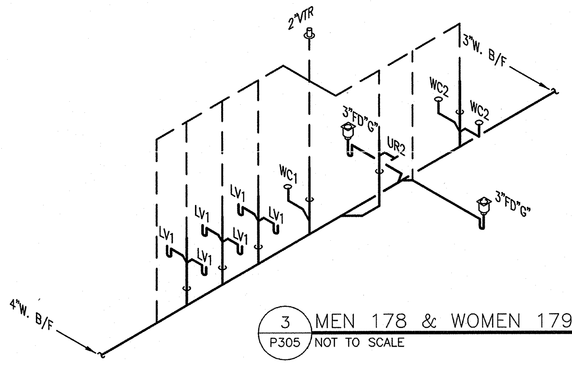

3 P305 MEN 178 & WOMEN 179 RISER DIAGRAM
NOT TO SCALE

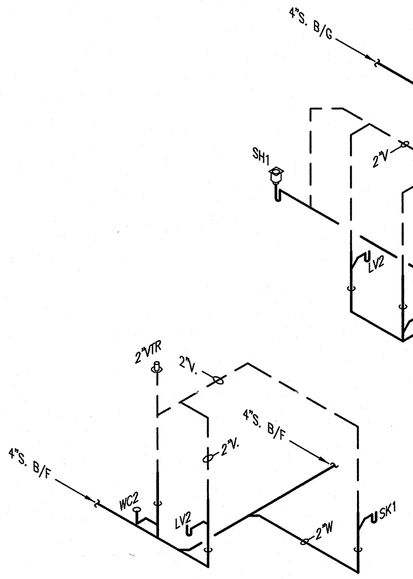

4 P305 UNISEX 184 RISER DIAGRAM
NOT TO SCALE

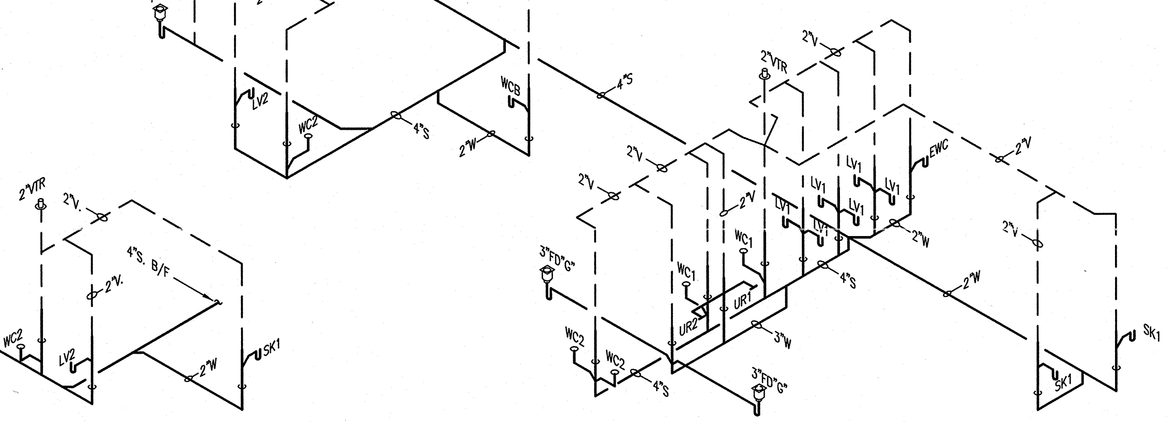

6 P305 MEN 191 & WOMEN 192 RISER DIAGRAM
NOT TO SCALE

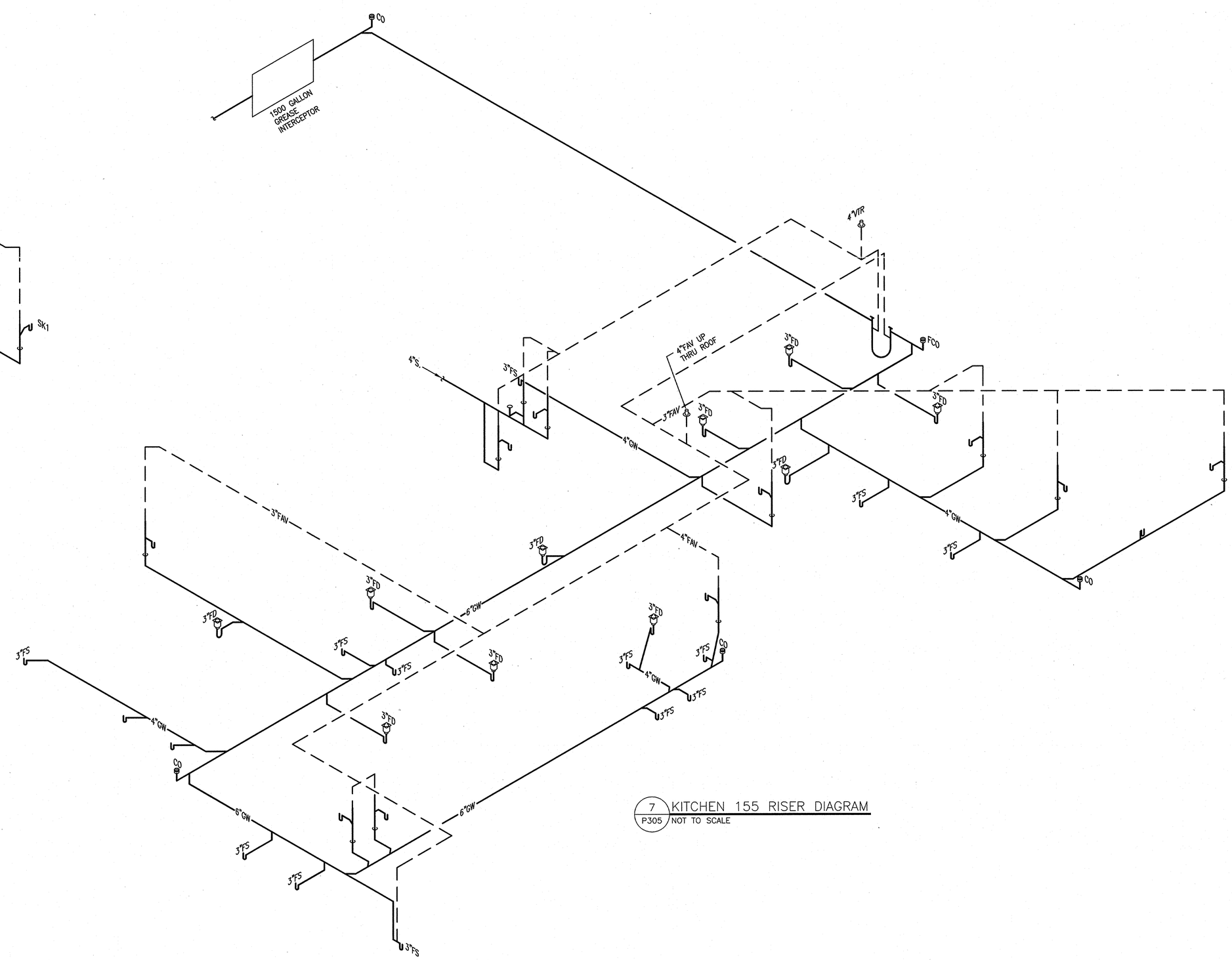

7 P305 KITCHEN 155 RISER DIAGRAM
NOT TO SCALE

© 2010
SIZEMORE GROUP

GEORGIA
DANIEL B. CLIFFORD P.E.

Drawn: JCD
Checked: DBC
Date: 12/13/10
Job No.: 09121POWDER

Revisions:

No.	Date

POWDER SPRINGS STATION RENOVATION – SENIOR CENTER
1150 POWDER SPRINGS STREET – MARIETTA, GEORGIA 30060

THE INFORMATION AND DESIGNS OF THIS DOCUMENT ARE THE PROPERTY OF THE SIZEMORE GROUP AND MUST BE RETURNED UPON REQUEST. THEY MAY NOT BE REPRODUCED, DISTRIBUTED OR USED FOR ANY PURPOSE OTHER THAN THE CONSTRUCTION OF THE PROJECT.

sizemoregroup

Title:
PLUMBING RISER DIAGRAMS

Scale:
AS NOTED

Sheet:
P305

of:

HESM&A
CONSULTING ENGINEERS
ATLANTA - JACKSON - CHARLOTTE
1255 COLLIER ROAD
ATLANTA, GA. 30318-2398
(404) 352-5300 - FAX (404) 352-0909
GEORGIA BOARD NO. - 959
ATG0118